GASBOY™

SERIES 1000

FUEL MANAGEMENT SYSTEM

DIAGNOSTIC MANUAL

C08925

GASBOY INTERNATIONAL LLC

GASBOY

SERIES 1000

FUEL MANAGEMENT SYSTEM

DIAGNOSTIC MANUAL

C08925

Rev. 03/07/03

GASBOY INTERNATIONAL LLC
LANSDALE, PA

PAGE STATUS SUMMARY

SERIES 1000 DIAGNOSTIC MANUAL C08925

Rev. 03/07/03

Page	Revision	Page	Revision
Contents-1 to -4	03/07/03	5-1 to 5-10	03/07/03
1-1 to 1-10	03/07/03	6-1 to 6-34	03/07/03
2-1 to 2-31	03/07/03	7-1 to 7-18	03/07/03
3-1 to 3-8	03/07/03	8-1 to 8-23	03/07/03
4-1 to 4-13	03/07/03	Warranty	6/4/02

CONTENTS

Section 1

SYSTEM OVERVIEW

THE SERIES 1000 SYSTEM

The GASBOY Series 1000 Fuel Management System is a microprocessor-based fuel control and data acquisition system which provides cost-efficient, 24-hour, unattended access to fuel dispensing equipment. The system is Underwriter's Laboratories (UL) and FCC listed. The Series 1000 system can be ordered in one of three system configurations: card, where access to the system is controlled by magnetic or optical cards; cardless, where access to the system is attained by entering a valid vehicle number; or FleetKey, where access to the system is controlled by encoded data keys.

All system types have the same basic design, however, the head differs for each system type and the pedestal dimensions are different with the receipt printer option. Throughout this manual, references are made to each of these system types. Be sure to read the information for the pertinent system type.

The system is modularly designed and easy to service. Access to the system is afforded via a hinged door at the rear of the cabinet. The one-piece hood can be removed for total accessibility during servicing.

ABOUT THIS BOOK

This book was written to assist the authorized service representative (ASR) or technician in troubleshooting the Series 1000 system. The book is broken down into sections, one for each component. Each section consists of:

- a description of the component
- a visual layout
- wiring connections
- illustrations of the programmed circuit boards and their indicators, connectors, jumpers, and switches
- diagnostic test procedures
- a troubleshooting section

USING THE TROUBLESHOOTING SECTION

The **Troubleshooting** section for each component lists system problems, probable causes and corrective action to be taken. The probable causes and checks for each problem are presented in logical sequence allowing you to rule out one set of symptoms before proceeding to the next.

A double line at the end of a problem sequence indicates the last of the checks for that problem. If your system still is not working, recheck your symptoms and follow another problem sequence, if necessary. If you encounter problems you cannot solve by using this manual, call GASBOY technical service at 1-800-444-5529.

Checks and corrective actions requiring voltage measurements assume familiarity with and are done with a voltmeter unless noted that an oscilloscope or ohmmeter should be used.

TERMS USED IN THIS BOOK

The following symbols and terms are used in the diagrams and tables in this book:

COM	Common	Sig	signal
NC	Normally closed	TB	terminal block
NO	Normally open	Tx+, Tx-	RS-422 transmit signals
Rx+, Rx-	RS-422 receive signals	VAC, VDC	Volts AC and Volts DC.

A horizontal line appearing above functions indicates that the function is active when 0 VDC is measured. Any other measurement indicates the function is not active.

$\overline{\text{POWER FAIL}}$ indicates that when voltage is measured at 0 VDC, a power fail condition is active.

The following symbols indicate wave patterns you may see when measuring voltages with an oscilloscope:

HARDWARE DESCRIPTION

The GASBOY Series 1000 Fuel Management System consists of a head and pedestal assembly. A one-piece hood and clear acrylic shield provide weather and sun-glare protection. A fluorescent light illuminates the face for 24-hour operation.

The Head

Although the basic design is the same, the head layout varies depending on your system type. The head measures approximately 15"W x 12"H x 20"D and is mounted on top of a 48" high pedestal. The card-activated system contains a magnetic stripe insertion reader or an optical card reader. The cardless system contains no reader. The FleetKey system is equipped with one or two key receptacles. A Disable Pumps button on the cabinet face allows the dispensing equipment to be shut down quickly in case of emergency.

An eye-level, 20-character liquid crystal display (LCD) provides prompting messages that guide the user through the steps required to operate the system. A list of operating instructions is also printed on the cabinet face. A 12-position membrane keypad, containing the keys 0-9, CLEAR, and ENTER, is provided on the center of the face for entering data (e.g., personal identification number (PIN), odometer readings, pump selections, etc.). All entries, except PIN, are displayed on the LCD for verification.

The rear of the cabinet is a hinged door secured with a lock to prohibit unauthorized access. The one piece hood can be removed for total accessibility during servicing. Interior LED indicators help diagnose system problems.

The Pedestal

The pedestal contains solid state relays and manual override switches which control power to the fuel dispensing equipment. If ordered, a high-speed, serial impact receipt printer is also housed within the pedestal. The wiring for all equipment connected to the Series 1000 is terminated in the pedestal. Internal wiring diagrams for all three system types are shown on the next several pages.

Internal Wiring - Mag or Cardless System

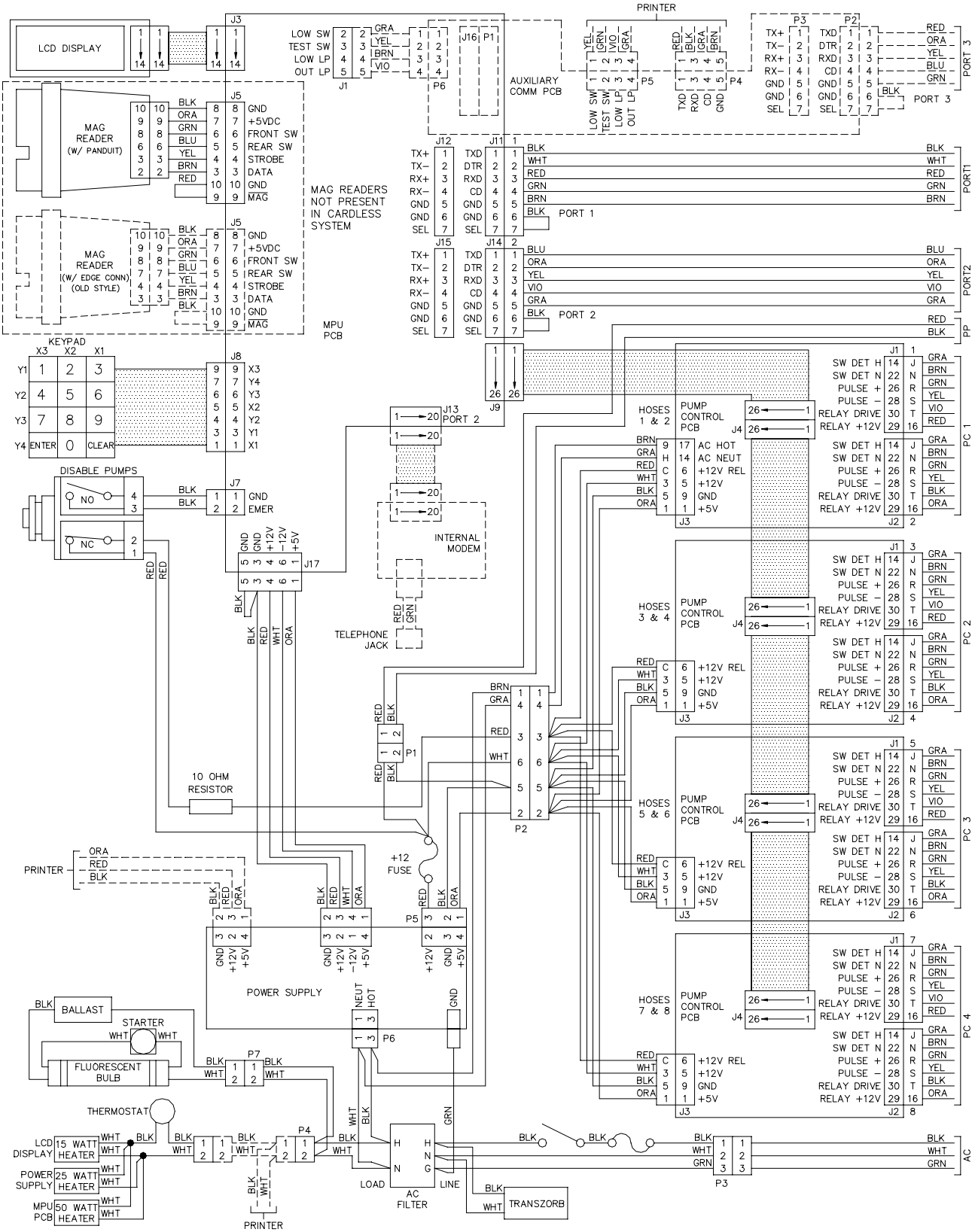

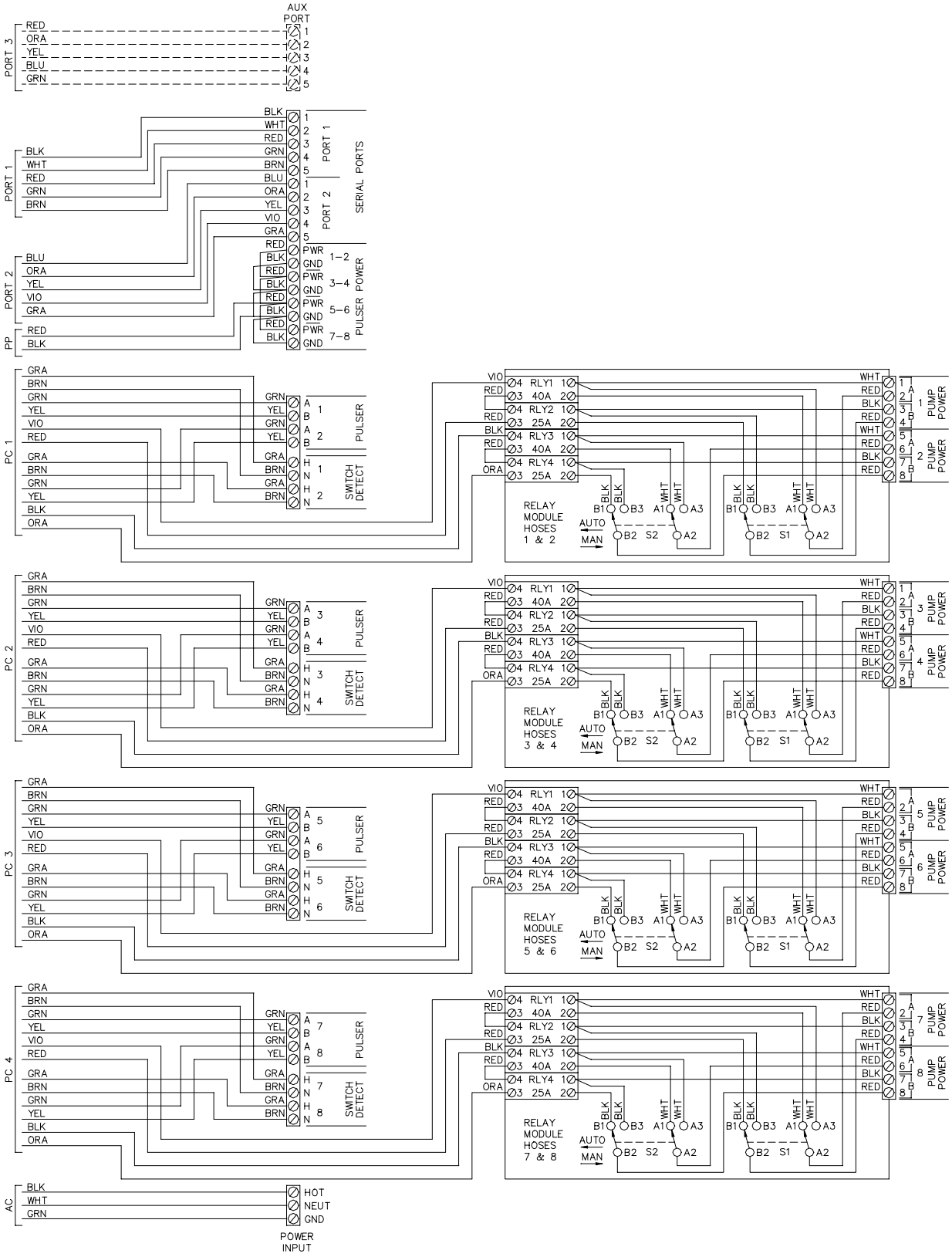
AUX PORT
PORT 3
RED
ORA
YEL
BLU
GRN
PORT 1
PORT 2
PP
SERIAL PORTS
POWER
PULSER
PC 1
PC 2
PC 3
PC 4
SWITCH DETECT
RELAY MODULE HOSES 1 & 2
RELAY MODULE HOSES 3 & 4
RELAY MODULE HOSES 5 & 6
RELAY MODULE HOSES 7 & 8
AUTO
MAN
PUMP POWER
AC
HOT
NEUT
GND
POWER INPUT

Internal Wiring - Optical System

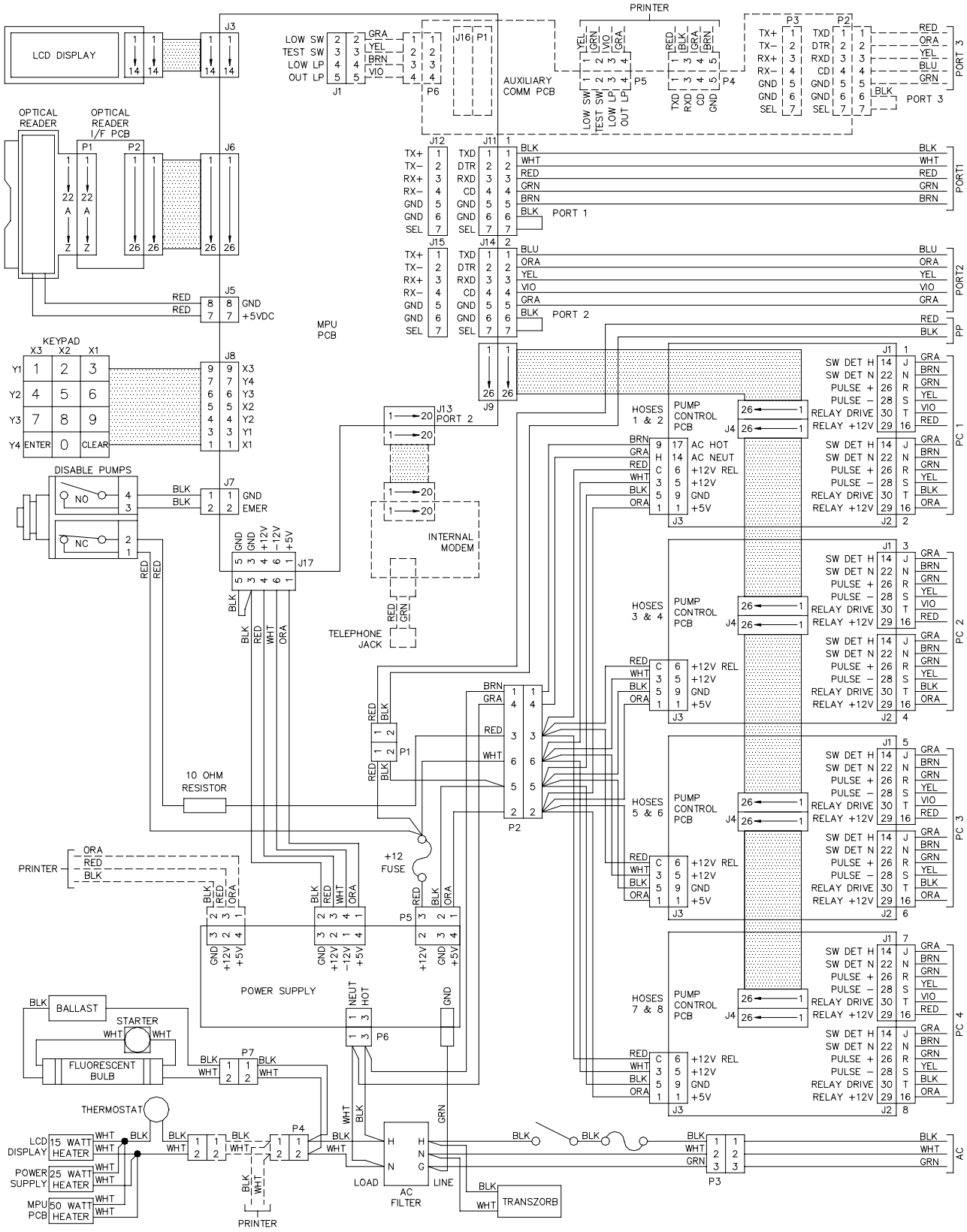

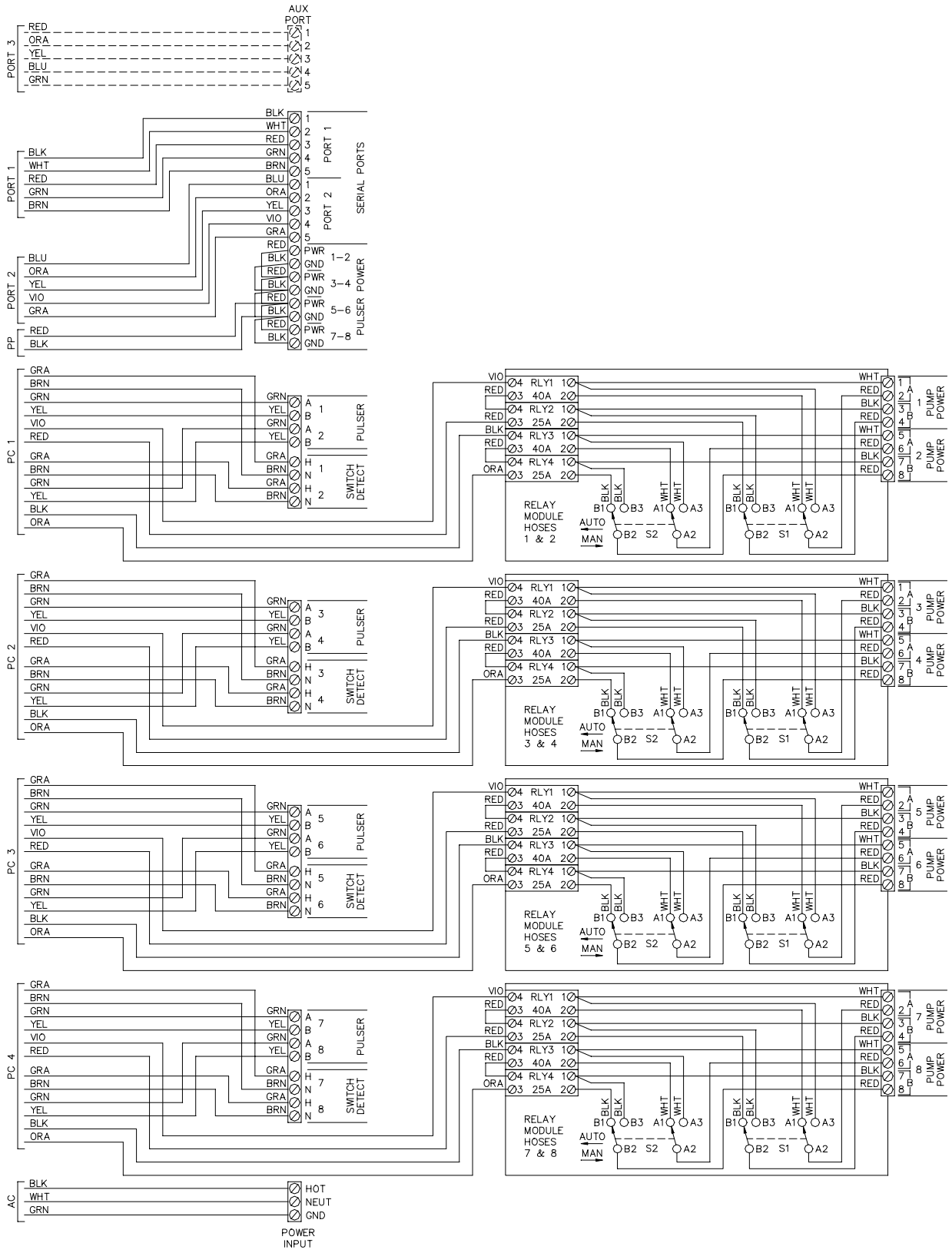
AUX PORT
PORT 3
RED
ORA
YEL
BLU
GRN
PORT 1
PORT 2
PP
SERIAL PORTS
PULSER POWER
PWR
GND
PC 1
PC 2
PC 3
PC 4
PULSER
SWITCH DETECT
RELAY MODULE HOSES 1 & 2
RELAY MODULE HOSES 3 & 4
RELAY MODULE HOSES 5 & 6
RELAY MODULE HOSES 7 & 8
RLY1 40A
RLY2 25A
RLY3 40A
RLY4 25A
AUTO
MAN
PUMP POWER
AC
HOT
NEUT
GND
POWER INPUT

Internal Wiring - FleetKey System

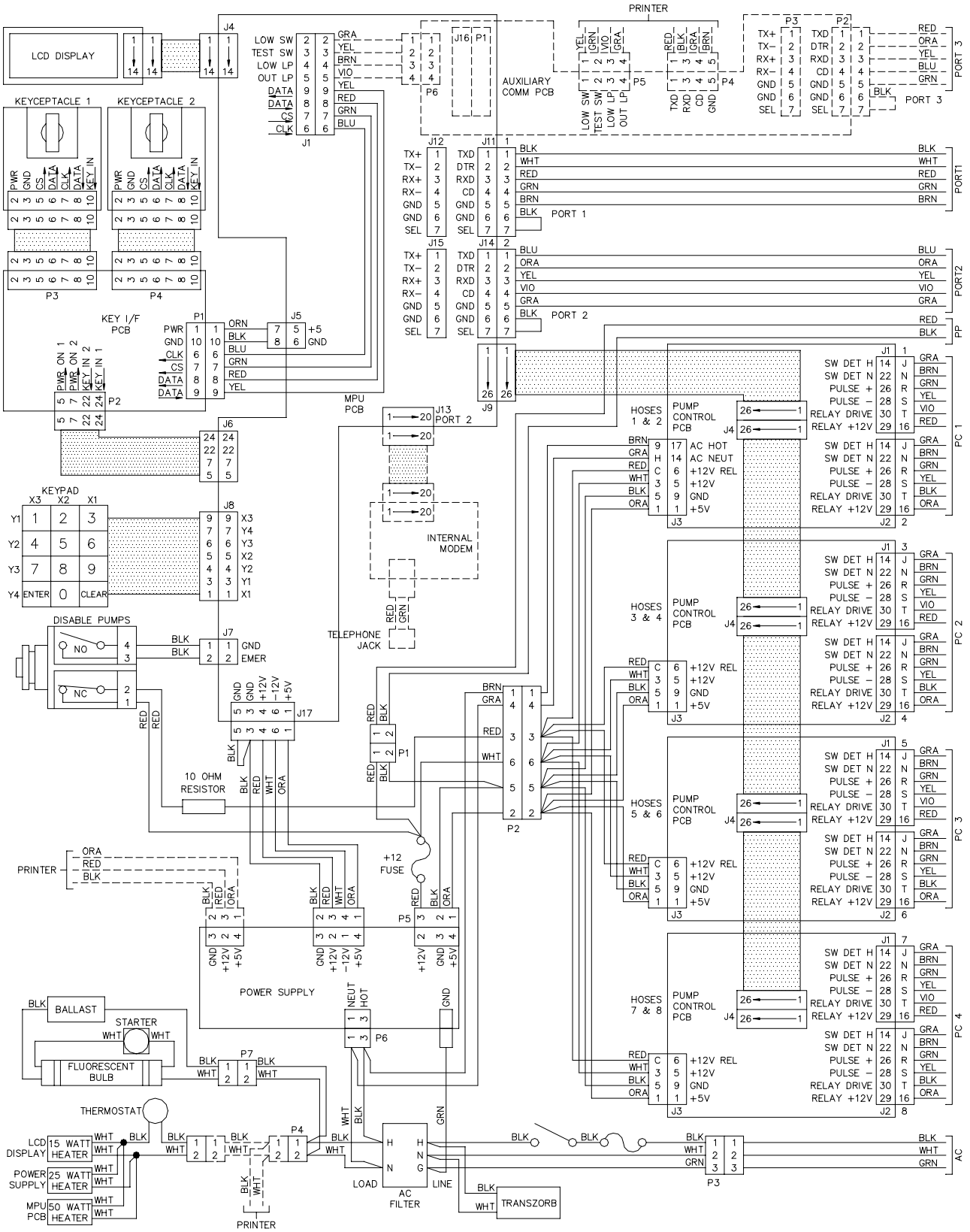

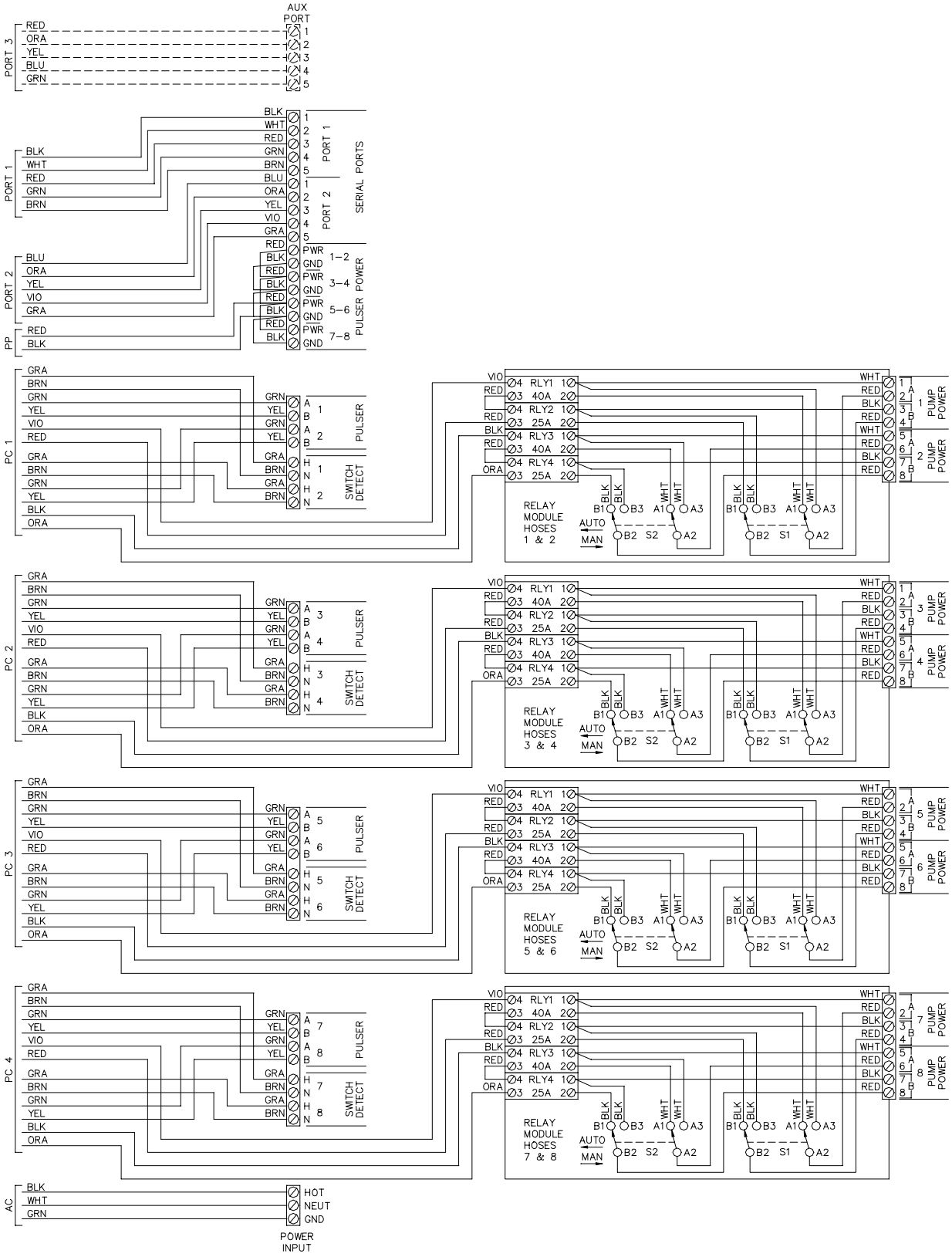
AUX PORT
PORT 3
RED
ORA
YEL
BLU
GRN
PORT 1
PORT 2
PP
SERIAL PORTS
POWER
PULSER
PC 1
PC 2
PC 3
PC 4
SWITCH DETECT
RELAY MODULE HOSES 1 & 2
RELAY MODULE HOSES 3 & 4
RELAY MODULE HOSES 5 & 6
RELAY MODULE HOSES 7 & 8
AUTO
MAN
PUMP POWER
AC
HOT
NEUT
GND
POWER INPUT

Capabilities and Safeguards

The standard Series 1000 System controls two hose outlets and can be expanded in two hose increments to control a maximum of eight hoses. The unit can be expanded in the field. The system can handle pulsing rates of dollar (penny per pulse); or quantity (1, 10, 100, 250, 500, or 1000 pulses per unit of product). The pulse rate selection switch is located in an area sealable by Weights and Measures for retail applications.

The GASBOY Series 1000 System has multiple safeguards to minimize system disruption due to power problems. Built-in AC and RS-422 transient protection reduces problems caused by power surges. In case of system or power failure, an AC and DC power fail detect, deadman timer, and pump control fail-safe circuits ensure an orderly shutdown so the system can return to normal operation upon restoration of power. The system clock and memory are backed-up by batteries to maintain the time and transaction data during power failures. Manual override switches permit the fuel dispensing equipment to be operated in the conventional manner, totally bypassing the system.

Communications Ports

A data terminal with an ASCII character set, or a computer with the proper interface, is required to communicate with the Series 1000. The data terminal (or computer) is connected to the system through one of two asynchronous communication ports located in the system pedestal. Communication may be through direct wire, or by dial-up phone lines using the optional internal 300/1200 baud modem. The ports can be set for either RS-232 or RS-422. An optional auxiliary port PCB (2 ports) allows communication with a receipt printer and/or tank monitoring system. The receipt printer port can be RS-232 only.

- Port 1 is normally used for direct connection of a data terminal located at the site. This port allows access to the system's Direct Printout Mode and Command Modes. In Direct Printout Mode, transactions print on the data terminal as they occur. When connected to this port, the data terminal remains in Direct Printout Mode until the commands are issued to enter Command Mode. To ensure the security of the information in the system, Command Mode can only be accessed using the proper password. Once signed on, the operator can update pump and tank information; validate/invalidate cards, vehicle records, and keys; and retrieve recorded transactions in a variety of formats.

- Port 2 is commonly used to connect to a remote data terminal or computer. Port 2 allows access only to the Command Mode. When the optional internal modem is used, port 2 communication is routed through the modem instead of being wired at the terminal block in the post.

- The auxiliary ports are used to connect a receipt printer and/or tank monitoring system. If you ordered your system with a receipt printer and/or tank monitoring system, this port is already present. No additional wiring is required for the receipt printer. See the *Series 1000 Installation Manual* for installation wiring for a tank monitoring system.

Section 2

HEAD ASSEMBLY

DESCRIPTION

The head portion of the Series 1000 is the heart of the system. Its physical layout is basically the same for all three system types with the following differences: the card-activated system contains a magnetic stripe insertion reader or an optical card reader; the cardless system contains no reader; the FleetKey system has one or two key receptacles.

The head also contains the power supply, the pump control unit (PCU) PCB, the microprocessor unit (MPU) PCB, and the auxiliary communication port PCB.

The drawings on the next three pages show the head as viewed from each angle:

- power supply side, page 2-2
- MPU PCB side, page 2-3
- top view, page 2-4

The three pages after that show the chassis wiring for each head type:

- mag card or cardless, page 2-5
- optical card, page 2-6
- FleetKey, page 2-7

Layout - Power Supply Side

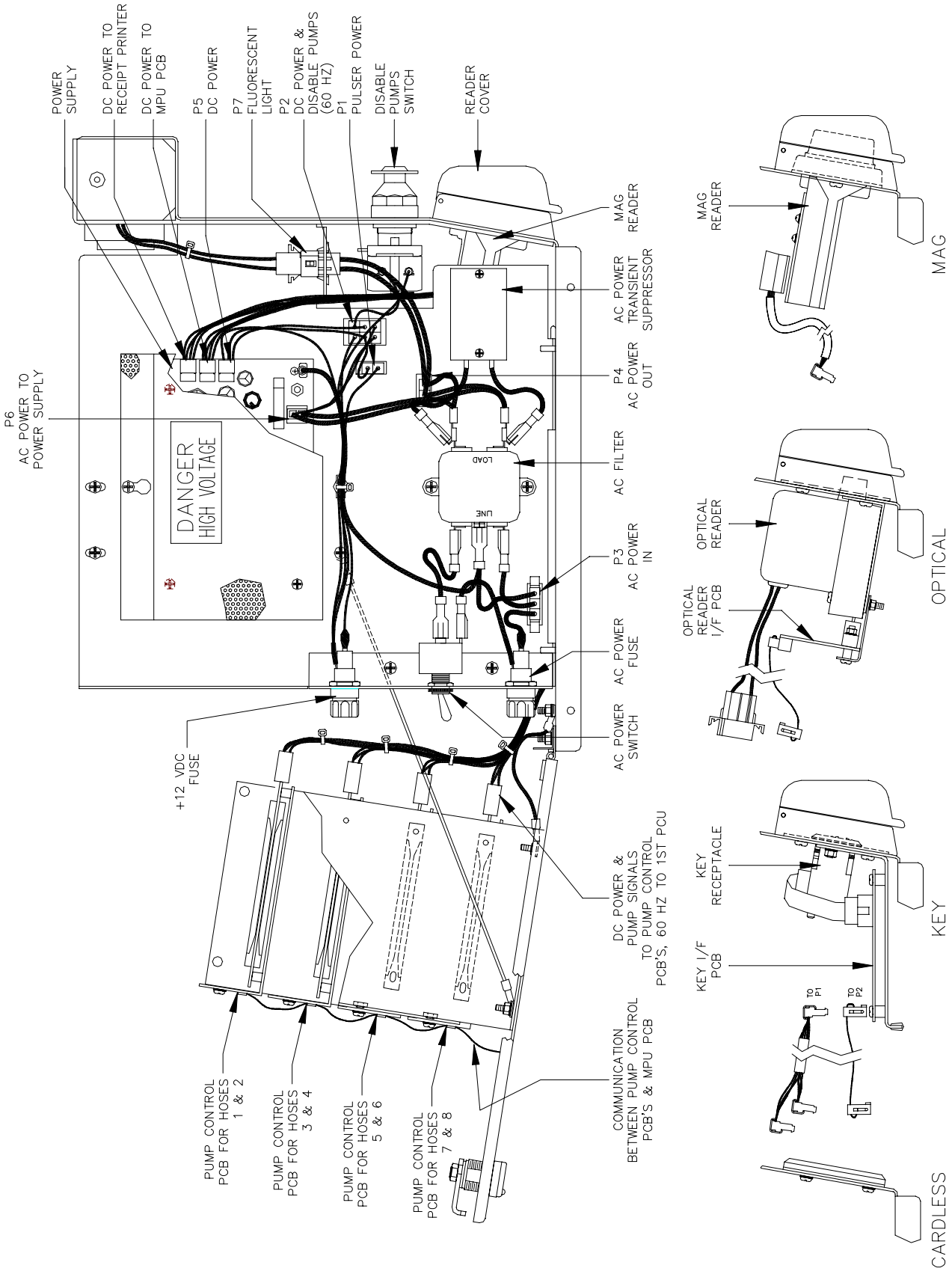

Layout - MPU PCB Side

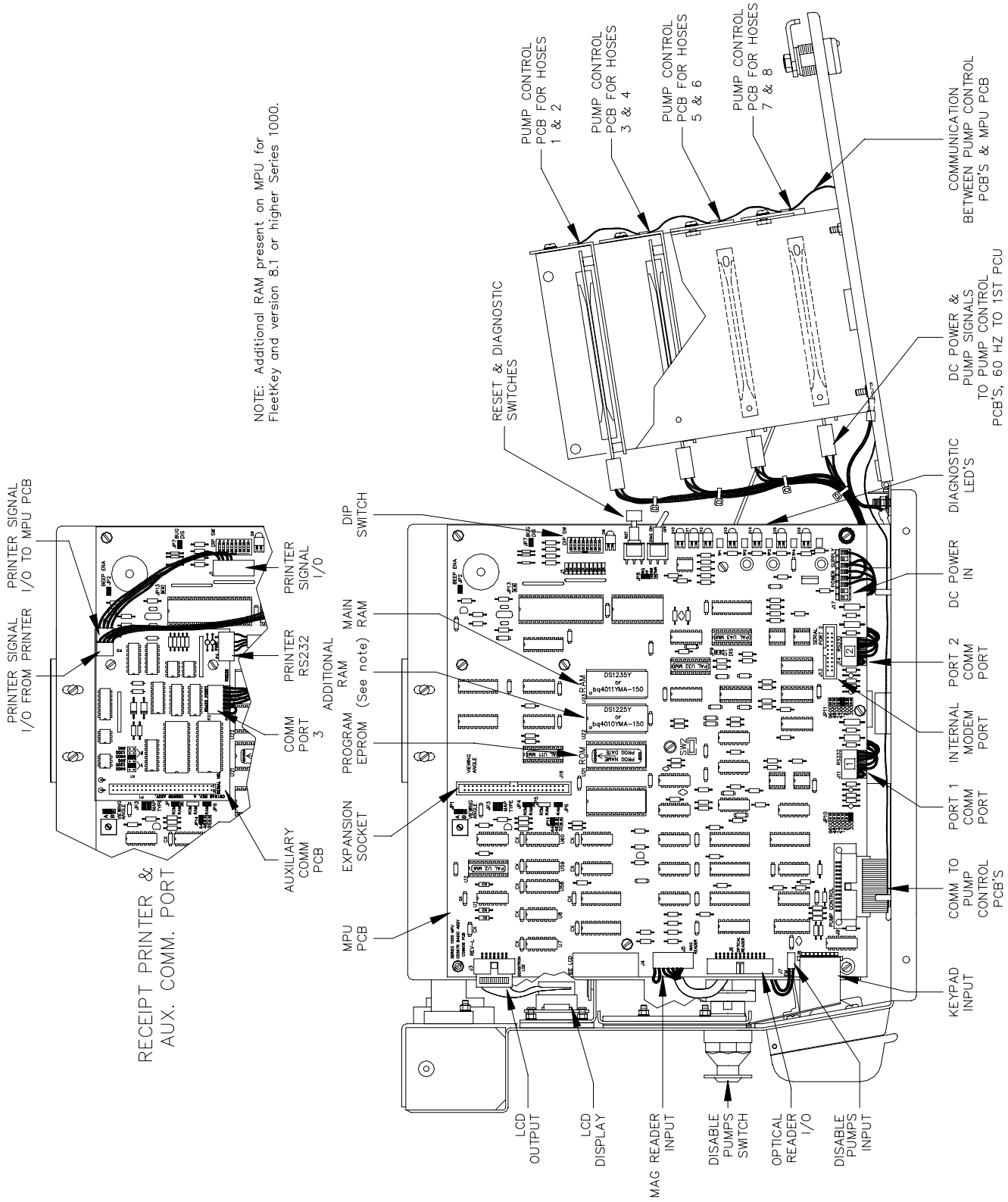

Layout - Top View

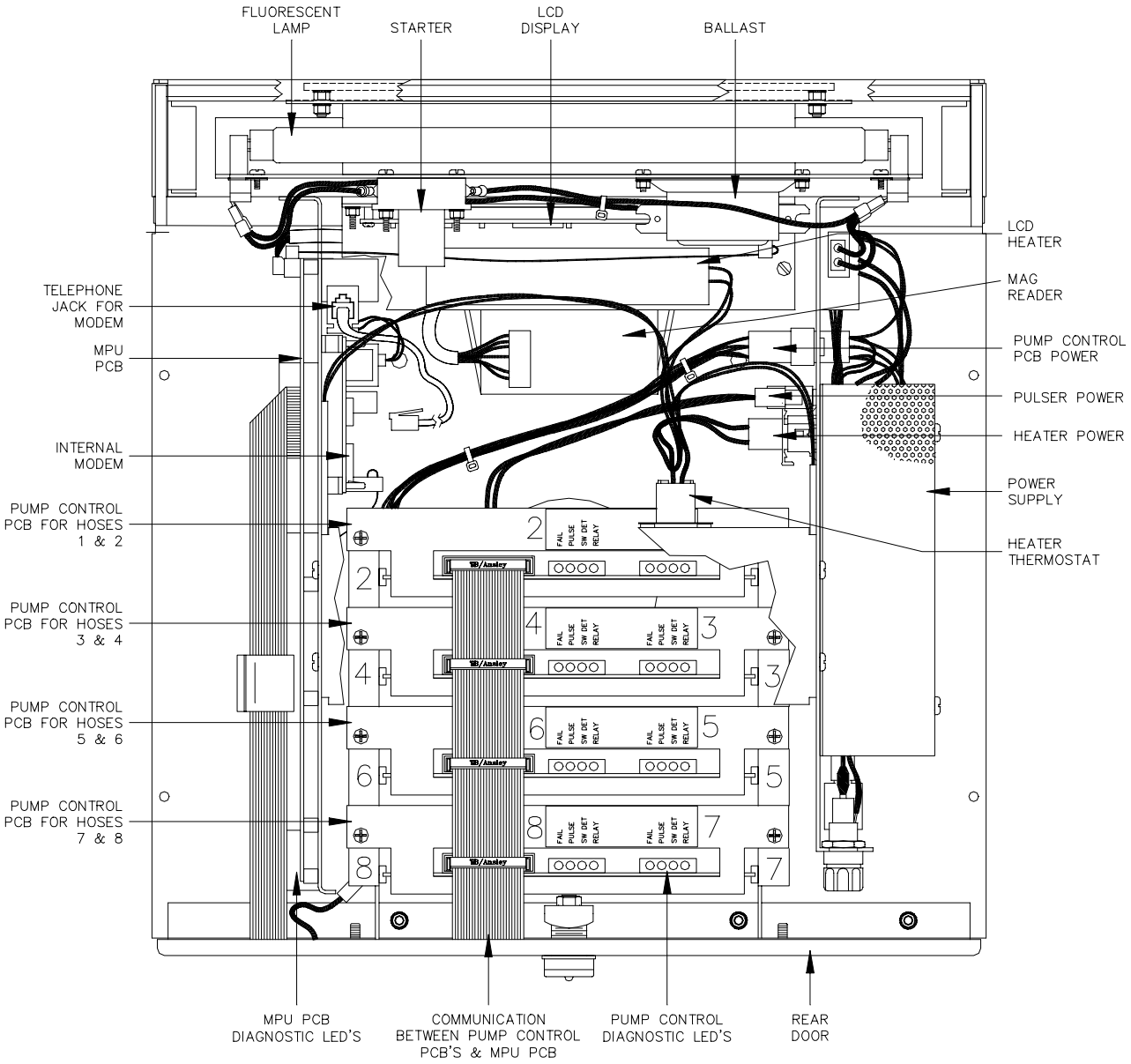

Chassis Wiring - Mag or Cardless Head Assembly

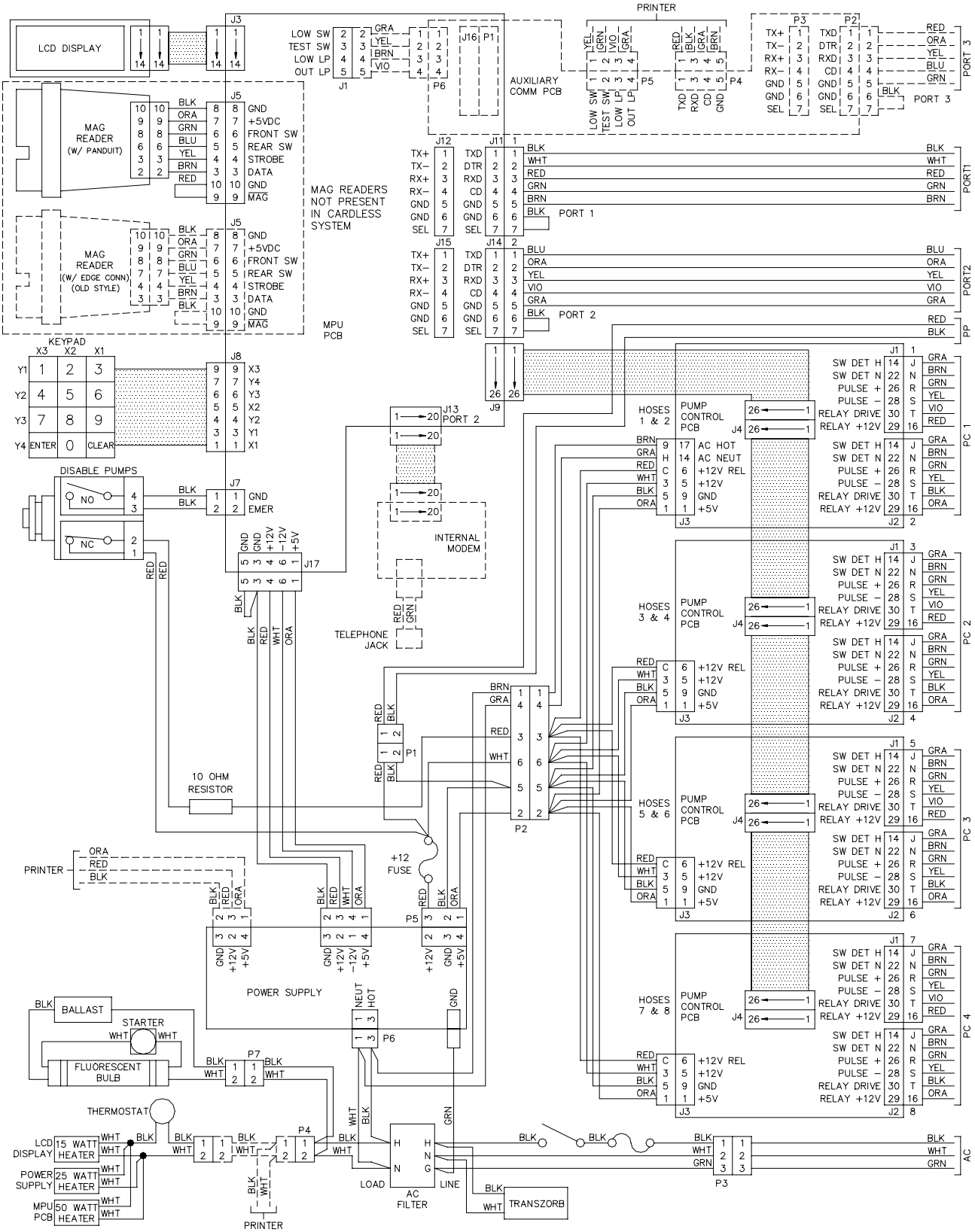

Chassis Wiring - Optical Head Assembly

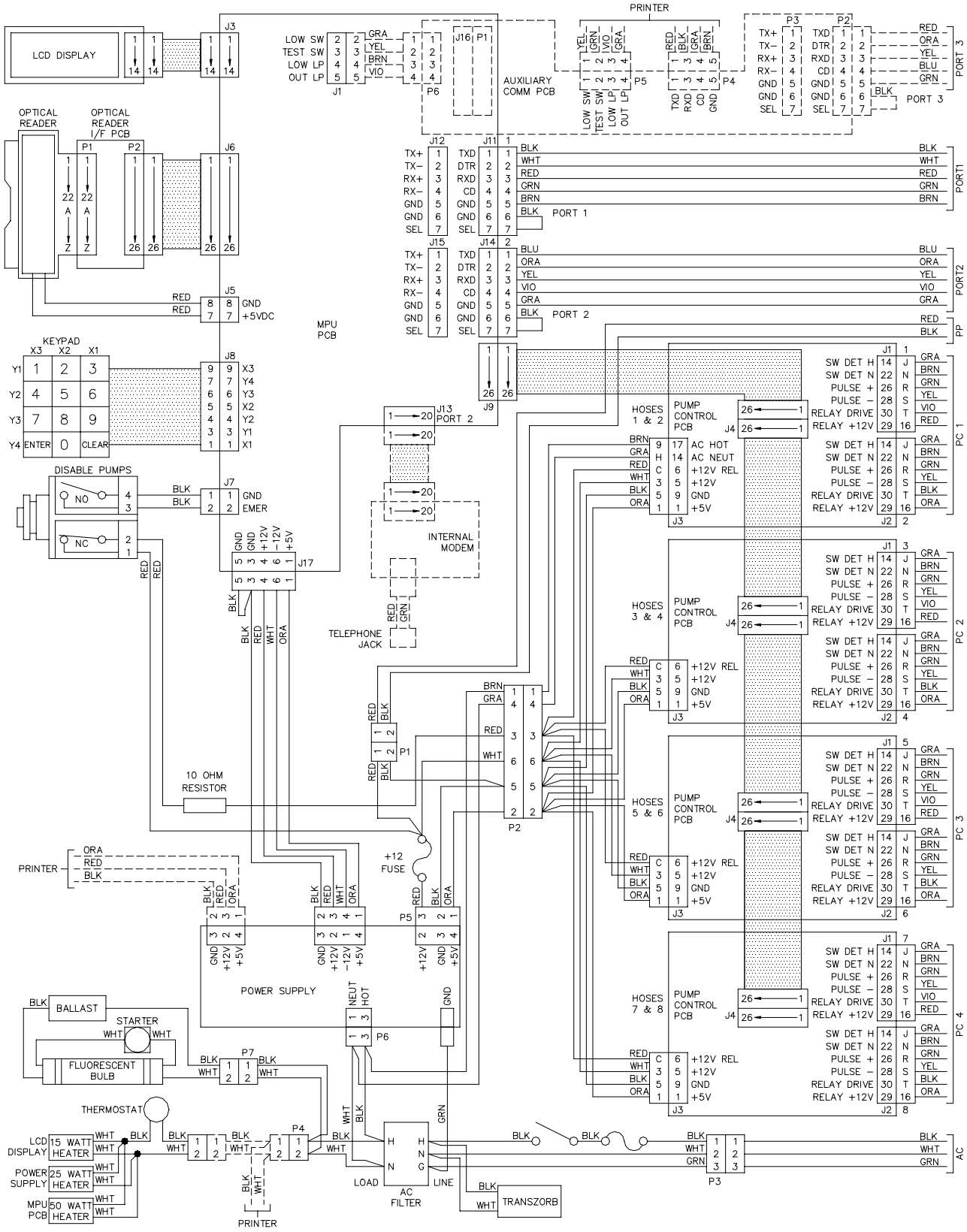

Chassis Wiring - FleetKey Head Assembly

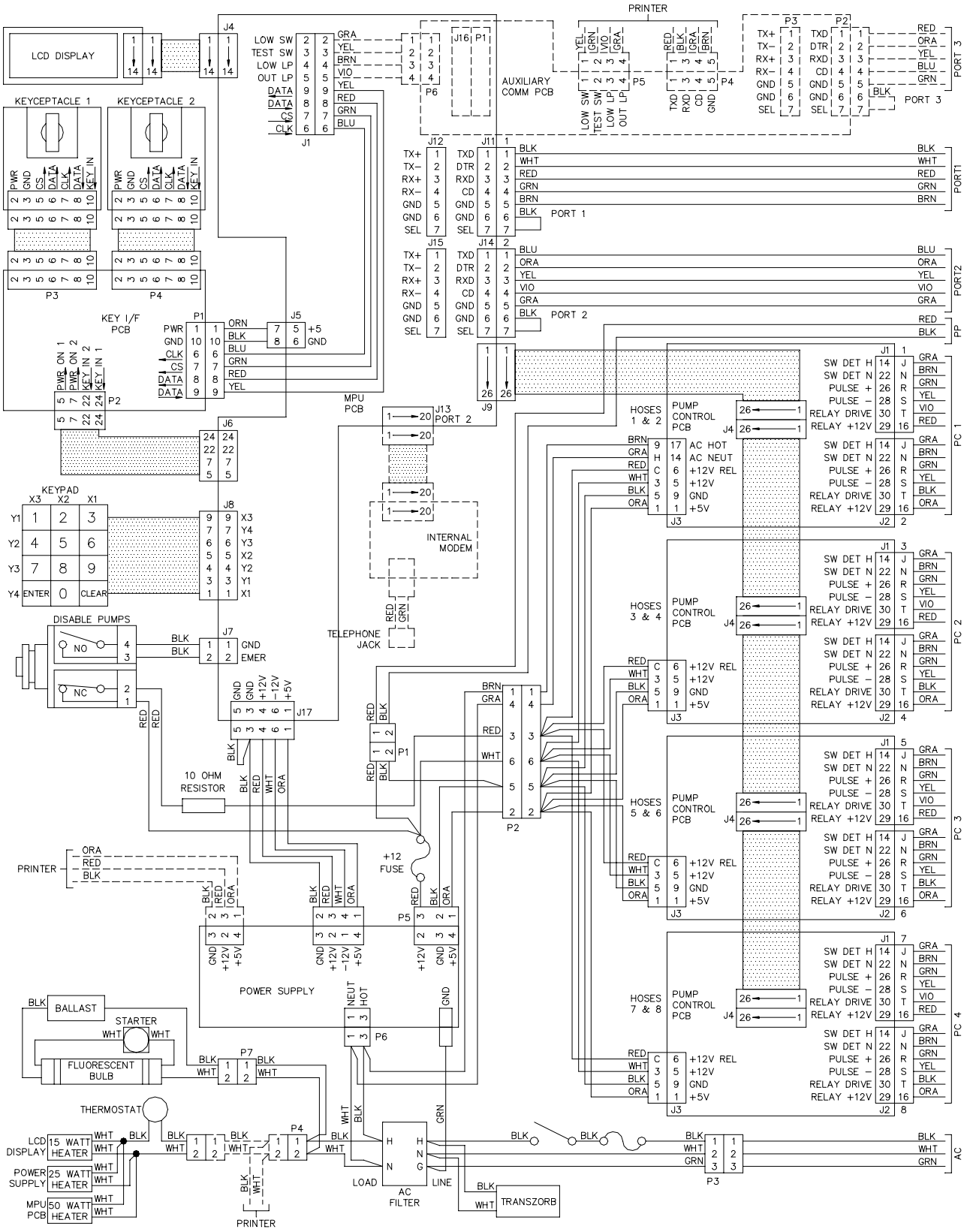

MPU PCB (C05676)

The MPU PCB controls all Series 1000 activities. Looking from the front of the Series 1000, the right side is the MPU side.

Layout

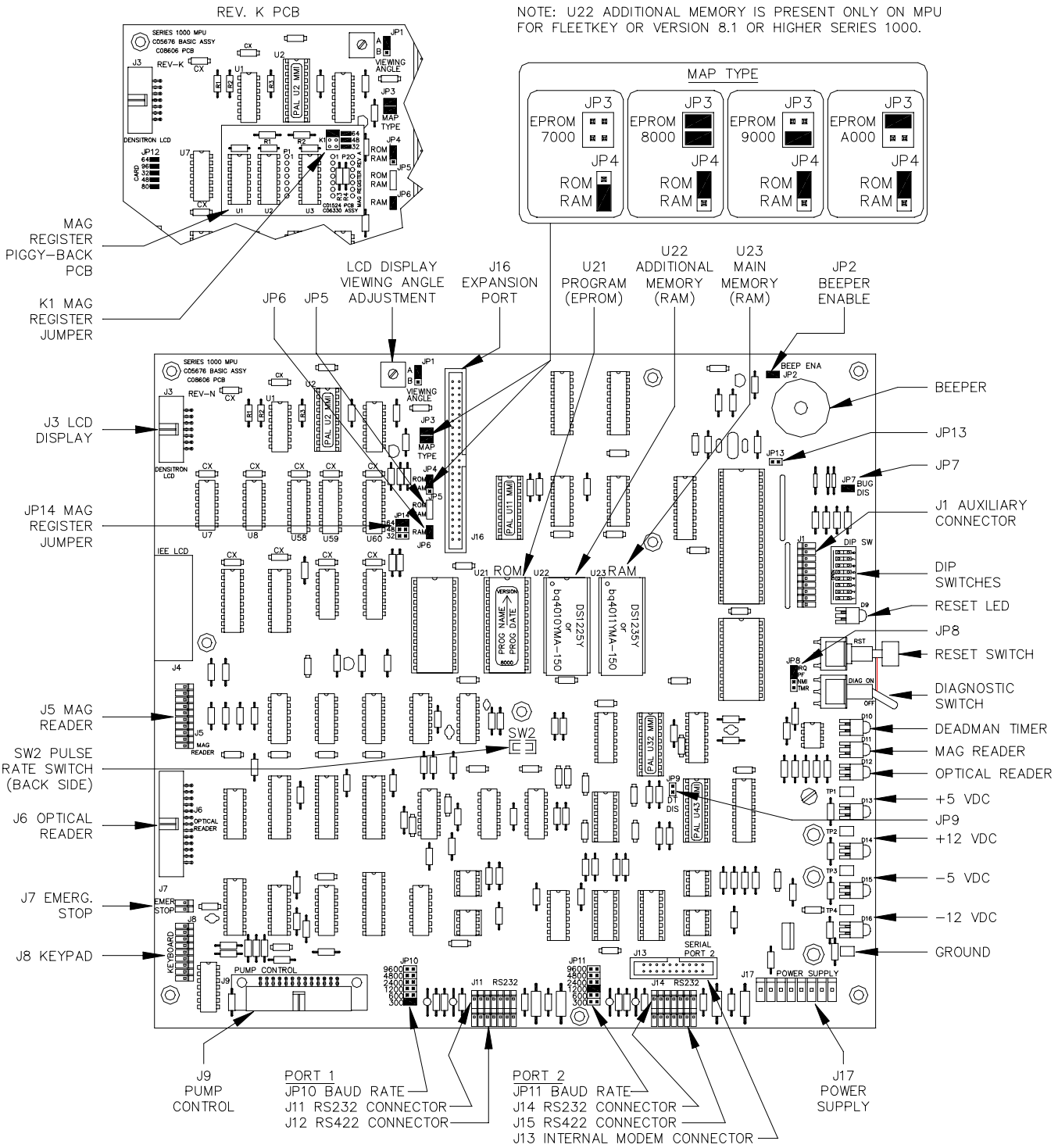

MPU - Software Compatibility

MPU Board Revision	Supports Software Versions
G1 through O or higher	Series 1000 V1.x and above FleetKey V1.x and above
C through G	Series 1000 V1.x through 7.x only Will not run V8.x or above or any FleetKey software.

LED Indicators

LED indicators are provided to allow you to monitor various functions of the MPU PCB.

LED	Function	Status
D9	RST–Reset	On–Reset attempt
D10	DT–Deadman timer	On–Deadman timer tripped
D11	MR–Mag reader	On–Card inserted
D12	OR–Optical reader	On–Card inserted
D13	+5 monitor	On–+5 VDC active
D14	+12 monitor	On–+12 VDC active
D15	–5 monitor	On–(–5) VDC active
D16	–12 monitor	On–(–12) VDC active

Connectors

J1 - Auxiliary Communications (Receipt Printer and Key Receptacle)

Pinout	Pin	Wire	Function on MPU	Receipt printer	Key system	Voltage
J1	1		+5 VDC pull–up			+5 VDC
	2	Gray	I/O 0	Paper low		0 VDC–Paper low
	3	Yellow	I/O 1	Test switch		0 VDC–Switch on
	4	Brown	I/O 2	Low paper lamp		0 VDC–Lamp on
	5	Violet	I/O 3	Out paper lamp		0 VDC–Lamp on
	6	Blue	I/O 4		Clock output	⊓⊔ +5 VDC–On
	7	Green	I/O 5		Chip select output	+5 VDC–Key on
	8	Red	I/O 6		Data output	⊓⊔ +5 VDC–On
	9	Yellow	I/O 7		Data input	⊓⊔ +5 VDC–On
	10		DC ground			DC ground

J3 - LCD Display

Pinout	Pin	Function	Voltage
J3	1	+5 VDC	+5 VDC
	2	DC ground	DC ground
	3	A0	0–Inst. Reg., 1–Data Reg.
	4	Viewing angle	0 to +5 VDC
	5	HEX 28 Enable	⊓⊔ +5 VDC Signal, active H to L
	6	R/W	0–Write to LCD, 1–Read from LCD
	7	DD1	⊓⊔ +5 VDC Signal
	8	DD0	⊓⊔ +5 VDC Signal
	9	DD3	⊓⊔ +5 VDC Signal
	10	DD2	⊓⊔ +5 VDC Signal
	11	DD5	⊓⊔ +5 VDC Signal
	12	DD4	⊓⊔ +5 VDC Signal
	13	DD7	⊓⊔ +5 VDC Signal
	14	DD6	⊓⊔ +5 VDC Signal

J5 - Mag Reader (Mag Reader and Key Receptacle)

Pinout	Pin	Wire	Mag Reader Function	Key System Function	Voltage
J5 (10 … 1)	1		DC ground		DC ground
	3	Brown	Data		⊓⊔ +5 VDC Signal
	4	Yellow	Strobe		⊓⊔ +5 VDC Signal
	5	Blue	Rear switch		0 VDC–Card fully inserted
	6	Green	Front switch		0 VDC–Card in reader
	7	Orange	+5 VDC	+5 VDC	+5 VDC
	8	Black	DC ground	DC ground	DC ground
	9	Red	$\overline{\text{Mag}}$		0 VDC–Mag system
	10	Red	DC ground		DC ground

J6 - Optical Reader

Pinout	Pin	Function	Voltage
J6 (26 … 25, 2 … 1)	1	SI	DC ground
	2	+5 VDC	+5 VDC
	3	SI	DC ground
	4	SO–Card inserted input	⊓⊔ +5 VDC–On
	5	C1–Column 1 output	0 VDC–on
	6	R9–Row 9 input	0 VDC–hole punched
	7	C2–Column 2 output	0 VDC–on
	8	R8–Row 8 input	0 VDC–hole punched
	9	C3–Column 3 output	0 VDC–on
	10	R7–Row 7 input	0 VDC–hole punched
	11	C4–Column 4 output	0 VDC–on
	12	R6–Row 6 input	0 VDC–hole punched
	13	C5–Column 5 output	0 VDC–on
	14	R5–Row 5 input	0 VDC–hole punched
	15	C6–Column 6 output	0 VDC–on
	16	R4–Row 4 input	0 VDC–hole punched
	17	C7–Column 7 output	0 VDC–on
	18	R3–Row 3 input	0 VDC–hole punched
	19	C8–Column 8 output	0 VDC–on
	20	R2–Row 2 input	0 VDC–hole punched
	21	C9–Column 9 output	0 VDC–on
	22	R1–Row 1 input	0 VDC–hole punched
	23	C10–Column 10 output	0 VDC–on
	24	R0–Row 0 input	0 VDC–hole punched
	25	$\overline{\text{OPTO}}$	0 VDC–optical card system
	26	DC ground	DC ground
	J6 used in a key system		
	5	Power on–Key 1	0 VDC–key 1 power on
	7	Power on–Key 2	0 VDC–key 2 power on
	22	Key 2 in	0 VDC–key 2 in receptacle
	24	Key 1 in	0 VDC–key 1 in receptacle

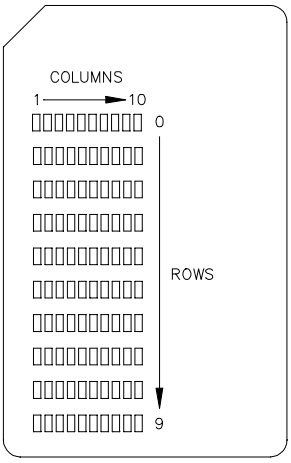

J7 - Disable Pumps

Pinout	Pin	Wire	Function	Voltage
J7 (2, 1)	1	Black	DC ground	DC ground
	2	Black	Disable Pumps	0 VDC–stop, 5 VDC–OK

J8 - Keypad

Pinout	Pin	Wire*	Function	Voltage
J8 (9, 1)	1	Red	X1–Output to CLEAR, 9, 6, 3	0 VDC–Key pressed, Off–Not pressed
	2	N/C	+5 VDC	+5 VDC
	3	White	Y1–Input from 1, 2, 3	0 VDC–Key pressed, +5 VDC–Not pressed
	4	Green	Y2–Input from 4, 5, 6	0 VDC–Key pressed, +5 VDC–Not pressed
	5	Brown	X2–Output to 0, 8, 5, 2	0 VDC–Key pressed, Off–Not pressed
	6	Blue	Y3–Input from 7, 8, 9	0 VDC–Key pressed, +5 VDC–Not pressed
	7	Orange	Y4–Input from ENTER, 0, CLEAR	0 VDC–Key pressed, +5 VDC–Not pressed
	8	N/C	DC ground	DC ground
	9	Yellow	X3–Output to ENTER, 7, 4, 1	0 VDC–Key pressed, Off–Not pressed

* Wire colors shown are for old keypad (membrane with rubber boot). New style keypad (full membrane) has clear plastic cable.

J9 - Pump Control

Pinout	Pin	Function	Voltage
J9 (26, 25, 2, 1)	1	DC ground	DC ground
	2	PD0–Data 0	⊓⊔ +5 VDC–On
	3	PD1–Data 1	⊓⊔ +5 VDC–On
	4	PD2–Data 2	⊓⊔ +5 VDC–On
	5	PD3–Data 3	⊓⊔ +5 VDC–On
	6	PD4–Data 4	⊓⊔ +5 VDC–On
	7	PD5–Data 5	⊓⊔ +5 VDC–On
	8	PD6–Data 6	⊓⊔ +5 VDC–On
	9	PD7–Data 7	⊓⊔ +5 VDC–On
	10	PR/W	⊓⊔ +5 VDC signal
	11	PA0–Address 0	⊓⊔ +5 VDC–On
	12	PA1–Address 1	⊓⊔ +5 VDC–On
	13	Hoses 1 & 2 select	0 VDC–Select hoses 1 & 2
	14	Hoses 3 & 4 select	0 VDC–Select hoses 3 & 4
	15	Hoses 5 & 6 select	0 VDC–Select hoses 5 & 6
	16	Hoses 7 & 8 select	0 VDC–Select hoses 7 & 8
	17	DC ground	DC ground
	18	E	⊓⊔ +5 VDC signal
	19	DC ground	DC ground
	20	$\overline{\text{Reset}}$	0 VDC–Reset PCB
	21	AC Detect	0 VDC–AC to be provided by PC PCB
	22	DC ground	DC ground
	23	DC ground	DC ground
	24	DC ground	DC ground
	25	DC ground	DC ground
	26	DC ground	DC ground

J11 - Port 1, RS-232

Pinout	Pin	Wire	Function	Voltage
J11 (7, 1)	1	Black	Tx data	⊓⊔ ±12 VDC signal output
	2	White	DTR	+12 VDC–Output enabled
	3	Red	Rx data	⊓⊔ ±12 VDC signal input
	4	Green	CD	+12 VDC–Input enabled
	5	Brown	DC ground	DC ground
	6	Black	DC ground	DC ground
	7	Black	Select	0 VDC–Connector selected

J12 - Port 1, RS-422

Pinout	Pin	Wire	Function		Voltage
J12 (7, 1)	1	Black	RS422 Tx+	To remote	⊓⊓ +5 VDC signal
	2	White	RS422 Tx−	device	between pins 1 & 2
	3	Red	RS422 Rx+	From remote	⊓⊓ +5 VDC signal
	4	Green	RS422 Rx−	device	between pins 3 & 4
	5	Brown	DC ground		DC ground
	6	Black	DC ground		DC ground
	7	Black	Select		0 VDC−Connector selected

J13 - Port 2, Internal Modem

Pinout	Pin	Function	Voltage
J13 (20, 19, 2, 1)	1	Tx data	⊓⊓ +5 VDC signal output
	4	−12 VDC	−12 VDC
	7	$\overline{DTR}$	0 VDC−Output enabled
	9	Modem reset	⊓ Modem reset
	10	DC ground	DC ground
	13	+12 VDC	+12 VDC
	14	+5 VDC	+5 VDC
	15	Rx data	⊓⊓ +5 VDC signal input
	17	$\overline{CD}$	0 VDC−Input enabled
	18	DC ground	DC ground
	19	+5 VDC	+5 VDC
	20	DC ground	DC ground

J14 - Port 2, RS-232

Pinout	Pin	Wire	Function	Voltage
J14 (7, 1)	1	Blue	Tx data	⊓⊓ ±12 VDC signal output
	2	Orange	DTR	+12 VDC−Output enabled
	3	Yellow	Rx data	⊓⊓ ±12 VDC signal input
	4	Violet	CD	+12 VDC−Input enabled
	5	Gray	DC ground	DC ground
	6	Black	DC ground	DC ground
	7	Black	Select	0 VDC−Connector selected

J15 - Port 2, RS-422

Pinout	Pin	Wire	Function		Voltage
J15 (7, 1)	1	Blue	RS422 Tx+	To remote	⊓⊓ +5 VDC signal
	2	Orange	RS422 Tx−	device	between pins 1 & 2
	3	Yellow	RS422 Rx+	From remote	⊓⊓ +5 VDC signal
	4	Violet	RS422 Rx−	device	between pins 3 & 4
	5	Gray	DC ground		DC ground
	6	Black	DC ground		DC ground
	7	Black	Select		0 VDC−Connector selected

J16 - Expansion Port (Auxiliary Communications PCB I/F)

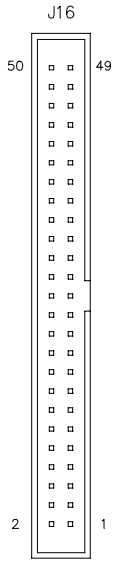

Pinout	Pin	Function	Voltage
	1	D0–Data 0	⊓⊔ +5 VDC–On
	2	D1–Data 1	⊓⊔ +5 VDC–On
	3	D2–Data 2	⊓⊔ +5 VDC–On
	4	D3–Data 3	⊓⊔ +5 VDC–On
	5	D4–Data 4	⊓⊔ +5 VDC–On
	6	D5–Data 5	⊓⊔ +5 VDC–On
	7	D6–Data 6	⊓⊔ +5 VDC–On
	8	D7–Data 7	⊓⊔ +5 VDC–On
	9	A0–Address 0	⊓⊔ +5 VDC–On
	10	A1–Address 1	⊓⊔ +5 VDC–On
	11	A2–Address 2	⊓⊔ +5 VDC–On
	12	A3–Address 3	⊓⊔ +5 VDC–On
	13	A4–Address 4	⊓⊔ +5 VDC–On
	14	A5–Address 5	⊓⊔ +5 VDC–On
	15	A6–Address 6	⊓⊔ +5 VDC–On
	16	A7–Address 7	⊓⊔ +5 VDC–On
	17	A8–Address 8	⊓⊔ +5 VDC–On
	18	A9–Address 9	⊓⊔ +5 VDC–On
	19	A10–Address 10	⊓⊔ +5 VDC–On
	20	A11–Address 11	⊓⊔ +5 VDC–On
	21	A12–Address 12	⊓⊔ +5 VDC–On
	22	A13–Address 13	⊓⊔ +5 VDC–On
	23	A14–Address 14	⊓⊔ +5 VDC–On
	24	A15–Address 15	⊓⊔ +5 VDC–On
	25	R/W	⊓⊔ +5 VDC signal
	26	E	⊓⊔ +5 VDC signal
	27	$\overline{\text{RESET}}$	0 VDC–Reset
	28	$\overline{\text{IRQ}}$	0 VDC–Interrupt request
	29	HEX 6 select	+5 VDC–Select
	30	HEX 5 select	+5 VDC–Select
	31,32	+5 VDC	+5 VDC
	33,34	DC ground	DC ground
	35,36	+12 VDC	+12 VDC
	37,38	DC ground	DC ground
	39,40	–12 VDC	–12 VDC
	41–50	Not used	

J17 - Power Supply

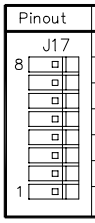

Pinout	Pin	Wire	Function	Voltage
	1	Orange	+5 VDC	+5 VDC
	3	Black	DC ground	DC ground
	4	Red	+12 VDC	+12 VDC
	5	Black	DC ground	DC ground
	6	White	–12 VDC	–12 VDC
	7		Power fail	Not used
	8		120 Hz	Not used

Jumpers

Jumper	Function	Setting
JP1	Viewing angle power	Center–A JP1 A B
JP2	Beeper enable	Jumpered JP2
JP3	EPROM map type The start address of the EPROM is written on the label of the program IC	7000 JP3 8000 JP3 9000 JP3 A000 JP3
JP4	U21 EPROM size The start address found on the EPROM determines the high order address line for U21 PCB's prior to Rev. G1 will not have this jumper patch and are automatically set in the ROM position, the PCB will need to be revised to accomodate the higher order address	7000 JP4 ROM RAM 8000 9000 A000 JP4 ROM RAM
JP5	U21 IC type (ROM/RAM)	Not used, always set at ROM
JP6	U22 RAM enable PCB's prior to Rev. G1 will not have this jumper patch so the U22 RAM is automatically disabled. The PCB will need to be revised to allow the RAM to be enabled.	Always jumpered (enabled) for FleetKey and Version 8.1 or higher software.
JP7	Debug disable	Jumpered JP7 BUG DIS
JP8	Interrupt setup (Power fail to IRQ)	IRQ–PF Jumpered JP8 IRQ PF NMI TMR
JP9	Deadman timer disable	No jumper (enabled) JP9 DT DIS
JP10 JP11	Serial port 1 baud rate Serial port 2 baud rate	Jumper according to baud rate desired JP10 or JP11 9600 4800 2400 1200 600 300
JP12 or K1 or JP14	Mag register size This jumper is available in this orientation for Rev. H – M PCB's. It should be jumpered according to the software version written on the EPROM (U21). It is used only for mag card systems.	**Revs. H & J** Versions 1–2 JP12 JP12 CARD 64 96 32 48 80 Versions 3–6 JP12 JP12 CARD 64 96 32 48 80 Version 7 or higher JP12 JP12 CARD 64 96 32 48 80 **Rev. K** Jumpers found on piggy–back mag register PCB Versions 1–2 K1 64 48 32 Versions 3–6 K1 64 48 32 Version 7 or higher K1 64 48 32 **Rev. L or ABOVE** Versions 1–2 JP14 64 48 32 Versions 3–6 JP14 64 48 32 Version 7 or higher JP14 64 48 32
JP13	Bus pull–up enable (Not available on all MPU PCB's)	No jumper JP13 (No pull–ups)

Switches

SW1 - Reset Switch

The reset switch starts a hardware and software reset of the MPU PCB.

Switch	Function	Setting
SW1	Reset MPU	Push to reset

SW2 - Pulse Rate Change

The pulse rate change switch is used during the configuration of system parameters. It is located on the back side of the MPU PCB and accessed through a hole in the sheet metal mounting bracket. With the switch enabled, the pulse rate for each hose outlet can be changed in the configuration mode of the system. When the switch is set to enabled, no transactions can occur at the system and the message **REMOTE CONFIGURATION** appears on the display. Upon completion of the configuration, the switch should be set to the disabled position. The switch can be sealed with a Weights and Measures paper seal when required.

Switch	Function	Setting
SW2	Pulse rate change	Disabled–Pushed towards front of unit
		Enabled–Pushed towards rear of unit

SW3 - Diagnostic Mode

This switch is used to enter and exit the diagnostic test mode available in the system. See the Diagnostic Kit and Tests section for specific instructions.

Switch	Function	Setting
SW3	Diagnostic mode	On–Pushed up
		Off–Pushed down

SW4 - DIP Switches

The DIP switches are not used by the Series 1000 and must be left in the OPEN position.

Switch	Function	Setting
DIP Switch	Not used	All switches must be in the OPEN position

Test Points

Test Point	Color	Voltage
+5	Orange	+5 VDC
+12	Red	+12 VDC
–5	Blue	–5 VDC
–12	White	–12 VDC
GND	Black	DC ground

LCD Adjustment (Densitron)

The LCD adjustment potentiometer found at the top of the MPU PCB controls the viewing angle (darkness) of the Densitron LCD display. Turn the control clockwise to make the display darker and counter-clockwise to make it lighter. See the **LCD Display** section for adjustment of the Okaya display viewing angle.

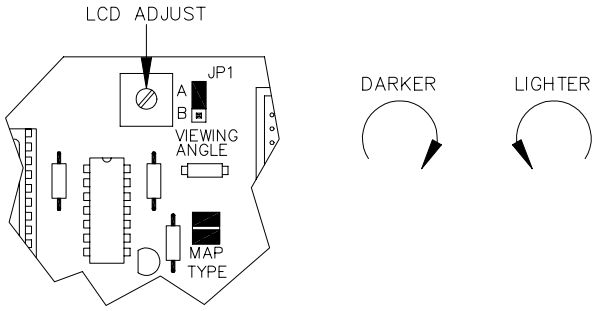

PUMP CONTROL PCB (C05677)

The Pump Control PCB:

- controls all mechanical and some electronic pumps
- drives the relays which control the pumps
- monitors status of the pump handle to turn relays on
- contains status LEDs for each hose outlet
- provides scheduled processor interrupts for internal program timing

Layout

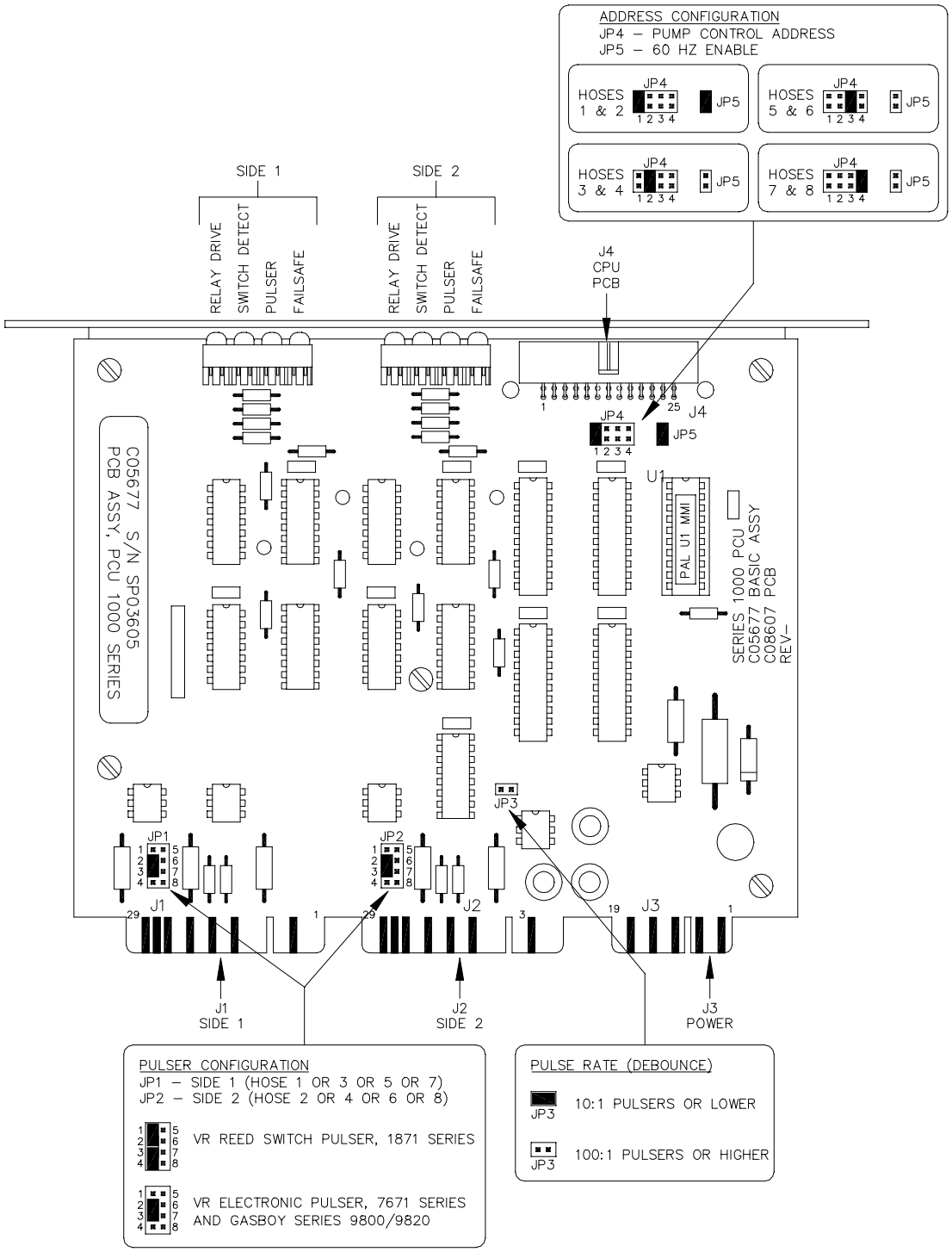

LED Indicators

LED indicators are provided to allow you to monitor the activity of the pump control PCB and the pumps.

LED	Function	Status
D1	Side 1 relay	On–side 1 relay drive on
D2	Side 1 switch detect	On–side 1 switch detect active
D3	Side 1 pulse	One flash for each pulse on side 1
D4	Side 1 failsafe	On–hardware auto–shutoff of relay drive 1
D5	Side 2 relay	On–side 2 relay drive on
D6	Side 2 switch detect	On–side 2 switch detect active
D7	Side 2 pulse	One flash for each pulse on side 2
D8	Side 2 failsafe	On–hardware auto–shutoff of relay drive 2

Connectors

J1 - Side 1 (Hoses 1, 3, 5, or 7)

Pinout

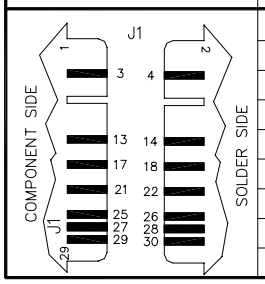

PCB Pin	Connector	Wire	Function	Voltage
4	C		DC ground	DC ground
14	J	Gray	Switch detect hot	115 VAC–active
18	L		Switch detect test input	+5 VDC–test active
22	N	Brown	Switch detect neutral	AC neutral
26	R	Green	Pulser +	Pulser voltage (usually +12 VDC)
27	15		Pulser +12 VDC	+12 VDC
28	S	Yellow	Pulser –	⎍ Negative signal from pulser
29	16	Red	Relay +12 VDC	+12 VDC
30	T	Violet	Relay drive	0 VDC–relay on

J2 - Side 2 (Hoses 2, 4, 6, or 8)

Pinout

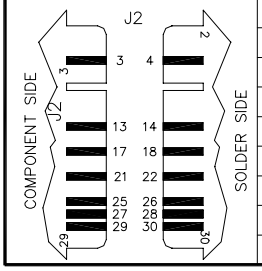

PCB Pin	Connector	Wire	Function	Voltage
4	C		DC ground	DC ground
14	J	Gray	Switch detect hot	115 VAC–active
18	L		Switch detect test input	+5 VDC–test active
22	N	Brown	Switch detect neutral	AC neutral
26	R	Green	Pulser +	Pulser voltage (usually +12 VDC)
27	15		Pulser +12 VDC	+12 VDC
28	S	Yellow	Pulser –	⎍ Negative signal from pulser
29	16	Orange	Relay +12 VDC	+12 VDC
30	T	Black	Relay drive	0 VDC–relay on

J3 - Power Supply

Pinout

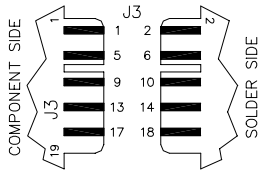

PCB Pin	Connector	Wire	Function	Voltage
1, 2	1	Orange	+5 VDC	+5 VDC
5	3	White	+12 VDC–pulser power	+12 VDC
6	C	Red	+12 VDC–relay power	+12 VDC w/ Emer. stop switch on
9, 10	5	Black	DC ground	DC ground
13, 14	H	Gray	60 Hz.–AC neutral	AC neutral
17, 18	9	Brown	60 Hz.–AC hot	115 VAC

NOTE: _ indicates pin to which wire is connected.

J4- MPU Interface

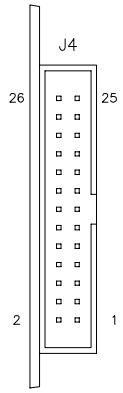

Pinout	Pin	Function	Voltage
	1	DC ground	DC ground
	2	PD0–Data 0	⊓⊔ +5 VDC–On
	3	PD1–Data 1	⊓⊔ +5 VDC–On
	4	PD2–Data 2	⊓⊔ +5 VDC–On
	5	PD3–Data 3	⊓⊔ +5 VDC–On
	6	PD4–Data 4	⊓⊔ +5 VDC–On
	7	PD5–Data 5	⊓⊔ +5 VDC–On
	8	PD6–Data 6	⊓⊔ +5 VDC–On
	9	PD7–Data 7	⊓⊔ +5 VDC–On
	10	PR/W	⊓⊔ +5 VDC signal
	11	PA0–Address 0	⊓⊔ +5 VDC–On
	12	PA1–Address 1	⊓⊔ +5 VDC–On
	13	Hoses 1 & 2 select	0 VDC–Select hoses 1 & 2
	14	Hoses 3 & 4 select	0 VDC–Select hoses 3 & 4
	15	Hoses 5 & 6 select	0 VDC–Select hoses 5 & 6
	16	Hoses 7 & 8 select	0 VDC–Select hoses 7 & 8
	17	DC ground	DC ground
	18	E	⊓⊔ +5 VDC signal
	19	DC ground	DC ground
	20	$\overline{\text{Reset}}$	0 VDC–Reset PCB
	21	AC Detect	0 VDC–AC to be provided by PC PCB
	22	DC ground	DC ground
	23	DC ground	DC ground
	24	DC ground	DC ground
	25	DC ground	DC ground
	26	DC ground	DC ground

Jumpers

Jumper	Function	Setting
JP1 & JP2	Pulser configuration JP1–side 1 (hoses 1, 3, 5, or 7) JP2–side 2 (hoses 2, 4, 6, or 8)	VR reed switch pulser 1871 series 10:1 or lower VR electronic pulser, 7671 series 100:1 or higher
JP3	Pulse rate (debounce) This jumper determines the debounce rate of the pulser circuits for the two pulsers connected to the PCB.	JP3 10:1 pulsers or lower JP3 100:1 pulsers or higher
JP4	Address configuration This jumper determines which two hoses the pump control PCB will control.	JP4 1 2 3 4 Hoses 1 & 2 JP4 1 2 3 4 Hoses 3 & 4 JP4 1 2 3 4 Hoses 5 & 6 JP4 1 2 3 4 Hoses 7 & 8
JP5	60 Hz. enable This jumper will enable the 60 Hz. signal available on the first pump control PCB (hoses 1 & 2).	JP5 Enabled–PCB addressed for hoses 1 & 2 JP5 Disabled–PCB's addressed for hoses 3 – 8

Schematic (Pulser input - JP1 and JP2)

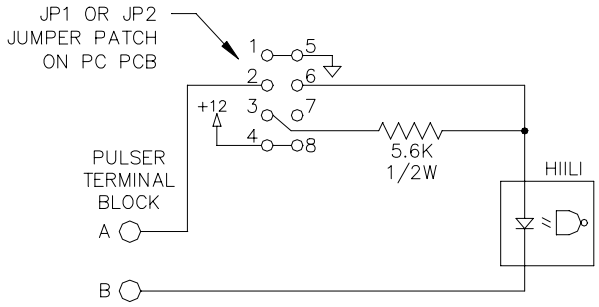

AUXILIARY COMMUNICATIONS PORT PCB (C05909)

The Auxiliary Communications Port PCB:

- provides an interface between the MPU PCB and the receipt printer (RS-232)
- provides an interface between the MPU PCB and a tank monitor (RS-232 or RS-422)

Layout

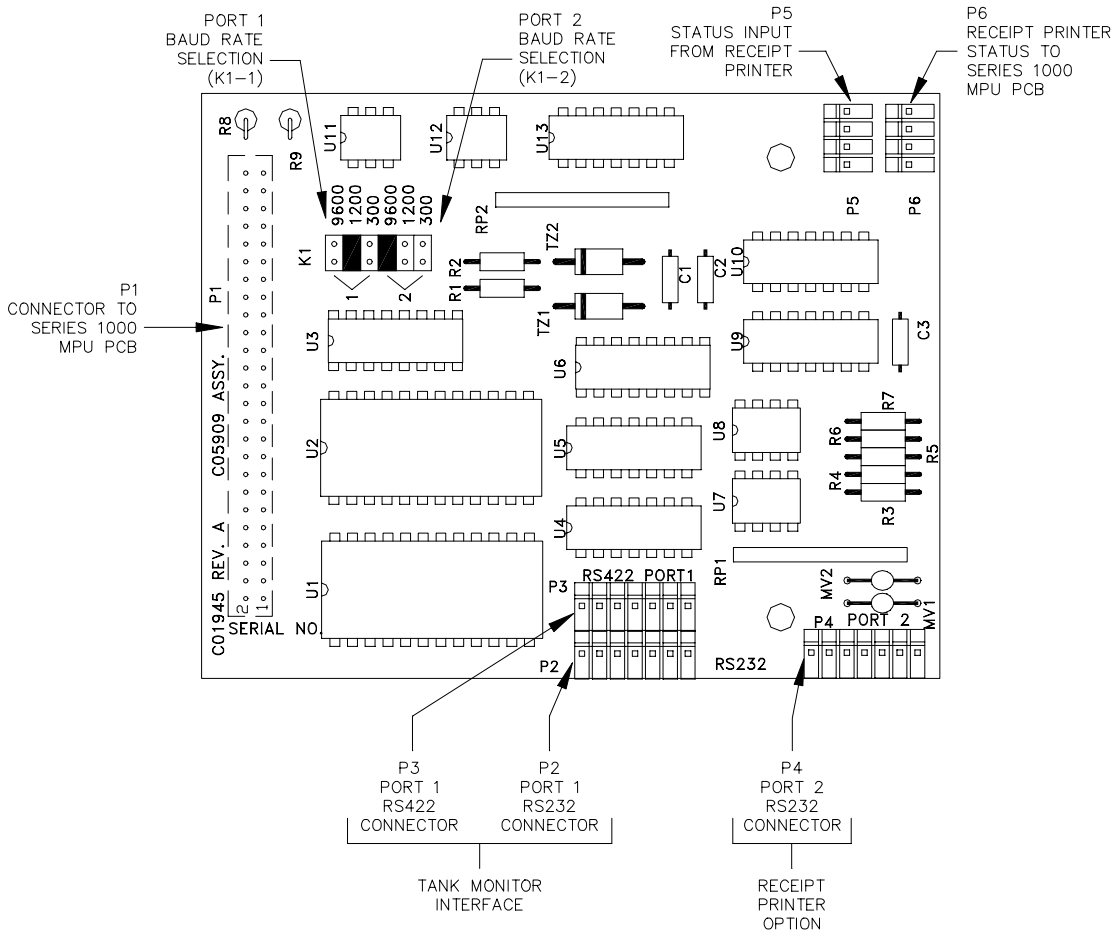

Connectors

P1 - MPU Interface

Pinout	Pin	Function	Voltage
P1 COMPONENT SIDE OF PCB 50 49 2 1	1	D0–Data 0	⊓⊔ +5 VDC–On
	2	D1–Data 1	⊓⊔ +5 VDC–On
	3	D2–Data 2	⊓⊔ +5 VDC–On
	4	D3–Data 3	⊓⊔ +5 VDC–On
	5	D4–Data 4	⊓⊔ +5 VDC–On
	6	D5–Data 5	⊓⊔ +5 VDC–On
	7	D6–Data 6	⊓⊔ +5 VDC–On
	8	D7–Data 7	⊓⊔ +5 VDC–On
	9	A0–Address 0	⊓⊔ +5 VDC–On
	10	A1–Address 1	⊓⊔ +5 VDC–On
	11	A2–Address 2	⊓⊔ +5 VDC–On
	12	A3–Address 3	⊓⊔ +5 VDC–On
	13	A4–Address 4	⊓⊔ +5 VDC–On
	14	A5–Address 5	⊓⊔ +5 VDC–On
	15	A6–Address 6	⊓⊔ +5 VDC–On
	16	A7–Address 7	⊓⊔ +5 VDC–On
	17	A8–Address 8	⊓⊔ +5 VDC–On
	18	A9–Address 9	⊓⊔ +5 VDC–On
	19	A10–Address 10	⊓⊔ +5 VDC–On
	20	A11–Address 11	⊓⊔ +5 VDC–On
	21	A12–Address 12	⊓⊔ +5 VDC–On
	22	A13–Address 13	⊓⊔ +5 VDC–On
	23	A14–Address 14	⊓⊔ +5 VDC–On
	24	A15–Address 15	⊓⊔ +5 VDC–On
	25	R/W	⊓⊔ +5 VDC signal
	26	E	⊓⊔ +5 VDC signal
	27	$\overline{\text{RESET}}$	0 VDC–Reset
	28	$\overline{\text{IRQ}}$	0 VDC–Interrupt request
	29	HEX 6 select	+5 VDC–Select
	30	HEX 5 select	+5 VDC–Select
	31,32	+5 VDC	+5 VDC
	33,34	DC ground	DC ground
	35,36	+12 VDC	+12 VDC
	37,38	DC ground	DC ground
	39,40	–12 VDC	–12 VDC
	41–50	Not used	

P2 - Tank Monitor Interface (RS-232)

Pinout	Pin	Wire	Function	Voltage
P2 7 1	1	Red	Tx data	⊓⊔ ±12 VDC signal output
	2	Orange	DTR	+12 VDC–Output enabled
	3	Yellow	Rx data	⊓⊔ ±12 VDC signal input
	4	Blue	CD	+12 VDC–Input enabled
	5	Green	DC ground	DC ground
	6	Black	DC ground	DC ground
	7	Black	Select	0 VDC–Connector selected

P3 - Tank Monitor Interface (RS-422)

Pinout	Pin	Wire	Function		Voltage
P3 (7 … 1)	1	Red	RS422 Tx+	To remote device	⊓⊔ +5 VDC signal between pins 1 & 2
	2	Orange	RS422 Tx−		
	3	Yellow	RS422 Rx+	From remote device	⊓⊔ +5 VDC signal between pins 3 & 4
	4	Blue	RS422 Rx−		
	5	Green	DC ground		DC ground
	6	Black	DC ground		DC ground
	7	Black	Select		0 VDC−Connector selected

P4 - Receipt Printer (RS-232)

Pinout	Pin	Wire	Function	Voltage
P4 (7 … 1)	1	Red	Tx data	⊓⊔ ±12 VDC signal output
	2	N/C	DTR	+12 VDC−Output enabled
	3	Black	Rx data	⊓⊔ ±12 VDC signal input
	4	Gray	CD	+12 VDC−Input enabled
	5	Brown	DC ground	DC ground
	6	N/C	DC ground	DC ground
	7	N/C		

P5 - Printer Status from Receipt Printer

Pinout	Pin	Wire	Function	Voltage
P5 (4 … 1)	1	Yellow	Paper low−from printer	0 VDC−paper low
	2	Green	Test switch−from printer	0 VDC−switch on
	3	Violet	Low paper−to printer	0 VDC−lamp on
	4	Gray	Out paper−to printer	0 VDC−lamp on

P6 - Printer Status to MPU PCB

Pinout	Pin	Wire	Function	Voltage
P6 (4 … 1)	1	Gray	Paper low−to MPU PCB	0 VDC−paper low
	2	Yellow	Test switch−to MPU PCB	0 VDC−switch on
	3	Brown	Low paper−from MPU PCB	0 VDC−lamp on
	4	Violet	Out paper−from MPU PCB	0 VDC−lamp on

Jumper

K1 - Baud Rates

Jumper	Function	Setting
K1	Baud rates 1−Baud rate for auxiliary comm. port (tank monitor) (should not exceed 1200) 2−Baud rate for receipt printer port (always 9600)	K1 1: 9600 / 1200 / 300 2: 9600 / 1200 / 300

LCD DISPLAY (C05770)

The LCD display is a 1- by 20-character display that provides a visual interface for the user. Adjustment of the viewing angle (intensity of character) varies. The Densitron display is adjusted on the MPU PCB; the Okaya display is adjusted directly on the LCD display.

Layout

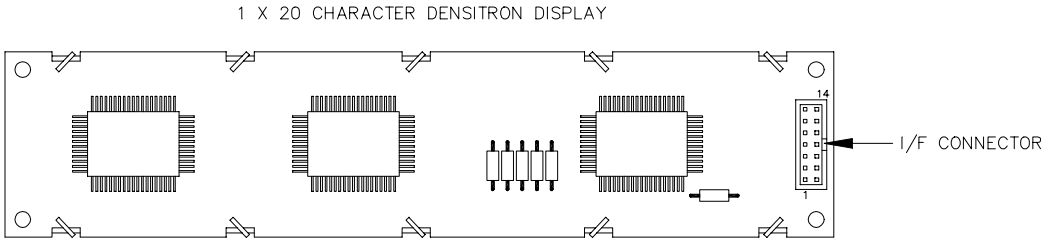

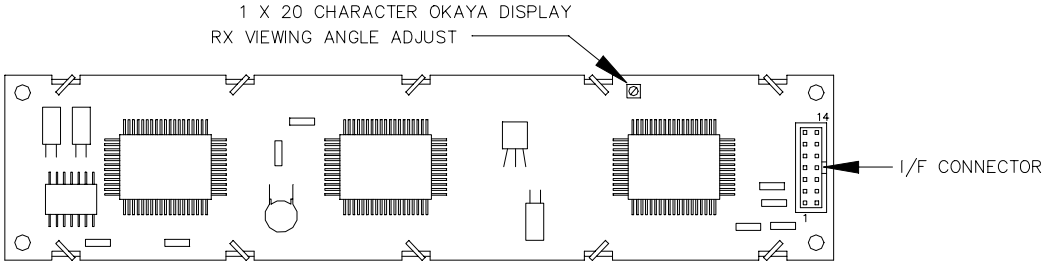

MPU Interface

Pinout	Pin	Function	Voltage
	1	DC ground	DC ground
	2	+5 VDC	+5 VDC
	3	V0–Viewing angle voltage	0 VDC–Dark, +5 VDC–Light (Densitron)
	4	RS–Register select	⊓⊔ 0 VDC–Bus contains instruction +5 VDC–Bus contains character to display
13 14	5	R/$\overline{W}$–Read/$\overline{Write}$ select	⊓⊔ +5 VDC–Read, 0 VDC–Write
	6	E–Enable	⊓⊔ Neg. transition latches data into LCD
	7	D0–Data 0	⊓⊔ +5 VDC–On
	8	D1–Data 2	⊓⊔ +5 VDC–On
1 2	9	D2–Data 2	⊓⊔ +5 VDC–On
	10	D3–Data 3	⊓⊔ +5 VDC–On
	11	D4–Data 4	⊓⊔ +5 VDC–On
	12	D5–Data 5	⊓⊔ +5 VDC–On
	13	D6–Data 6	⊓⊔ +5 VDC–On
	14	D7–Data 7	⊓⊔ +5 VDC–On

LCD Adjustment (Okaya)

RX indicates the viewing angle adjustment potentiometer (pot) for the Okaya display. To make the display lighter, turn the pot clockwise; to make the display darker, turn the pot counter-clockwise.

OPTICAL READER INTERFACE PCB (C05788)

The optical reader interface PCB provides a method of interface between the edge connector on the optical reader to a ribbon cable.

Layout

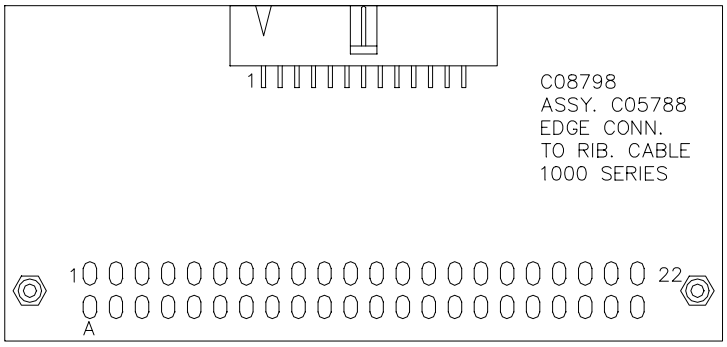

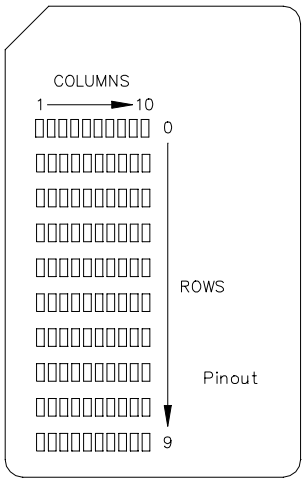

Connectors

P1 - Optical Reader Interface
P2 - MPU PCB Interface

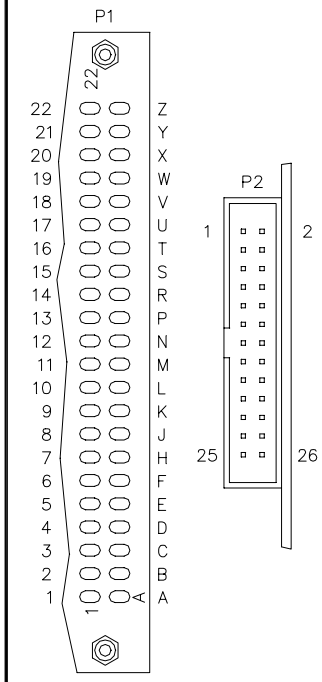

Pinout	P1 Pin	P2 Pin	Function	Voltage
	1 & D	1	SI	DC ground
	A	2	+5 VDC	+5 VDC
	1 & D	3	SI	DC ground
	5	4	SO–Card inserted input	⊓⊔⊔ +5 VDC–On
	6	5	C1–Column 1 output	0 VDC–on
	F	6	R9–Row 9 input	0 VDC–hole punched
	7	7	C2–Column 2 output	0 VDC–on
	H	8	R8–Row 8 input	0 VDC–hole punched
	8	9	C3–Column 3 output	0 VDC–on
	J	10	R7–Row 7 input	0 VDC–hole punched
	9	11	C4–Column 4 output	0 VDC–on
	K	12	R6–Row 6 input	0 VDC–hole punched
	10	13	C5–Column 5 output	0 VDC–on
	L	14	R5–Row 5 input	0 VDC–hole punched
	11	15	C6–Column 6 output	0 VDC–on
	M	16	R4–Row 4 input	0 VDC–hole punched
	12	17	C7–Column 7 output	0 VDC–on
	N	18	R3–Row 3 input	0 VDC–hole punched
	13	19	C8–Column 8 output	0 VDC–on
	P	20	R2–Row 2 input	0 VDC–hole punched
	14	21	C9–Column 9 output	0 VDC–on
	R	22	R1–Row 1 input	0 VDC–hole punched
	15	23	C10–Column 10 output	0 VDC–on
	S	24	R0–Row 0 input	0 VDC–hole punched
	1 & D	25	$\overline{\text{OPTO}}$	0 VDC–optical card system
	1 & D	26	DC ground	DC ground

KEY INTERFACE PCB (C06264)

The Key Interface PCB:

- provides an interface between two key receptacles and the MPU PCB
- provides ESD (electrostatic discharge) protection for the key interface lines
- controls selection of and power to the key receptacles

Layout

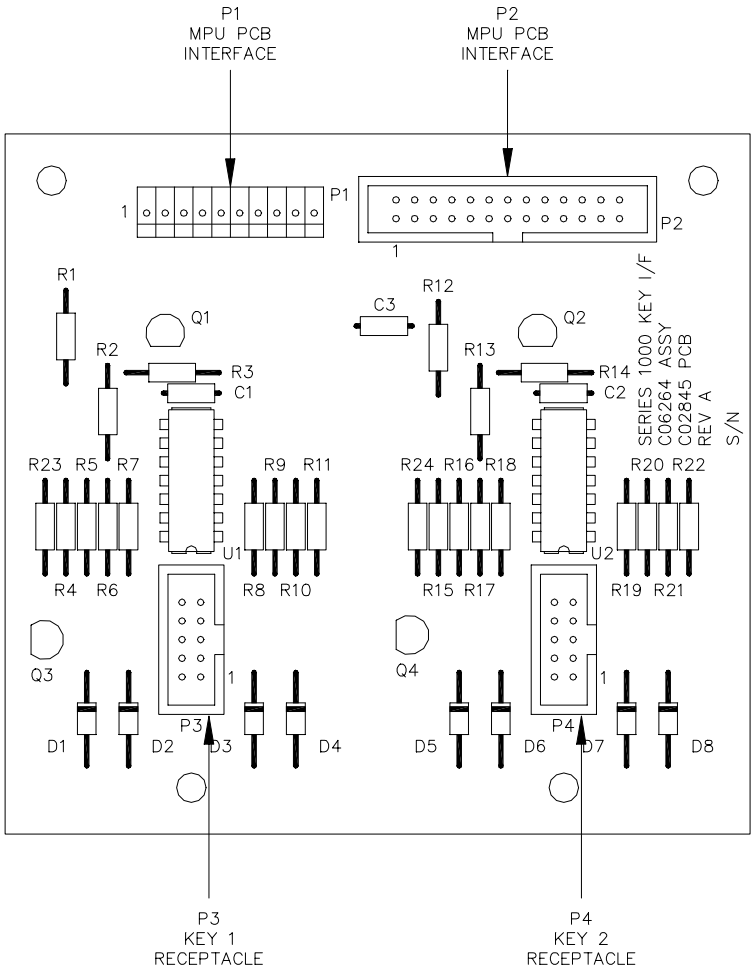

Connectors

P1 - MPU PCB Interface

Pinout	Pin	Wire	Function	Voltage
P1 (1 – 10)	1	Orange	Power	+5 VDC
	2	N/C	Key in 1	0 VDC–key 1 in receptacle
	3	N/C	Key in 2	0 VDC–key 2 in receptacle
	4	N/C	Power on 1	0 VDC–power on for key 1
	5	N/C	Power on 2	0 VDC–power on for key 2
	6	Blue	SK (Clock)	⊓⊔ +5 VDC–On
	7	Green	Chip select	+5 VDC–Key on
	8	Red	Data in (to key)	⊓⊔ +5 VDC–On
	9	Yellow	Data out (from key)	⊓⊔ +5 VDC–On
	10	Black	DC ground	DC ground

P2 - MPU PCB Interface

Pinout	Pin	Function	Voltage
P2 (26, 25, 2, 1)	5	Power on 1	0 VDC–power on for key 1
	7	Power on 2	0 VDC–power on for key 2
	22	Key in 2	0 VDC–key 2 in receptacle
	24	Key in 1	0 VDC–key 1 in receptacle
	All other pins are not used.		

P3 or P4 - Key Receptacles Interface

Pinout	Pin	Function	Voltage
P3 or P4 (10, 9, 2, 1)	1	N/C	
	2	Power	+5 VDC–power on
	3	DC ground	DC ground
	4	N/C	
	5	Chip select	+5 VDC–Key on
	6	Data in (to key)	⊓⊔ +5 VDC–On
	7	SK (Clock)	⊓⊔ +5 VDC–On
	8	Data out (from key)	⊓⊔ +5 VDC–On
	9	N/C	
	10	Key in	0 VDC–key in receptacle

POWER SUPPLY (C09053)

The power supply provides internal power used by the Series 1000. This unit provides +5, +12, and -12 VDC to the internal components (including the receipt printer).

Layout

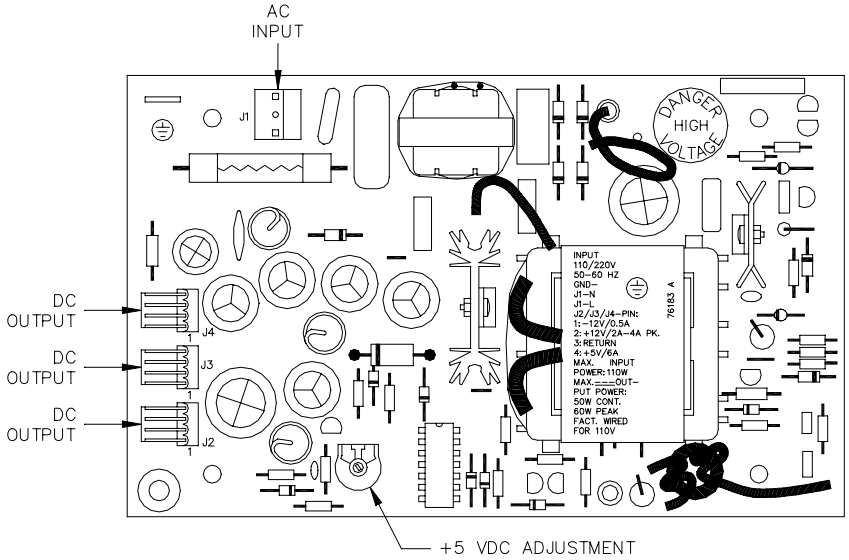

NOTE: Power supply is rotated for readability. Actual installation in head has DC output connectors on the right.

Connectors

AC Input

Pinout	Pin	Wire	Function	Voltage
1 / 3	1	White	AC neutral input	AC neutral
	2		N/C	
	3	Black	AC hot input	115 VAC

DC Output

Pinout	Pin	Wire	Function	Voltage
4 / 1	1	White	–12 VDC from supply	–12 VDC
	2	Red	+12 VDC from supply	+12 VDC
	3	Black	DC ground	Ground
	4	Orange	+5 VDC from supply	+5 VDC

DC Power Measurements and Adjustments

+5 VDC Measurement

1. Unlock and open the rear door of the Series 1000.

2. Locate the DC voltage test points along the edge of the lower half of the MPU PCB.

3. Set a digital voltmeter to a 20VDC scale and place the negative meter lead (black) in the ground test point TP5 (black).

4. Place the positive meter lead (red) in the +5V test point TP1 (orange) and check if the measured voltage is within the specified tolerance range (see chart below). If it is within tolerance go to Step 10.

Series 1000 Power Supply Tolerance Range

Voltage	Allowable Range
+5VDC	5.00 VDC to 5.10 VDC
+12VDC	11.80 VDC to 14.00 VDC
-12VDC	-11.70 VDC to -14.00 VDC
-5VDC	Unused

+ 5 VDC Adjustment

5. Turn off the AC power switch.

6. Remove the hood from the head of the Series 1000.

7. Remove the mesh cover from the power supply.

8. Turn on the AC power switch.

CAUTION
Be careful not to touch anything except the adjustment screw. High voltage exists at various points on the supply.

9. Locate the plastic voltage adjustment screw in the upper right corner of the supply. Turn the screw clockwise to increase the voltage or counterclockwise to decrease the voltage. This screw will only adjust the +5V output which should be set to +5.00V. If the supply cannot be adjusted within tolerance, replace it and return to Step 3.

+12 VDC Measurement

10. Move the positive meter lead (red) to the +12V test point TP2 (red) and check if the measured voltage is within the specified tolerance range. If it is within tolerance, go to Step 11, otherwise replace the power supply and return to Step 3.

-12 VDC Measurement

11. Move the positive meter lead (red) to the -12V test point TP4 (white) and check if the measured voltage is within the specified tolerance range. If it is within tolerance, the power is fine. If it is not within tolerance, replace the power supply and return to Step 3.

KEYPAD (C08586)

The keypad is located on the face of the unit. The keypad:

- allows the user to enter data in the system
- runs various diagnostic tests

Layout - Full Membrane

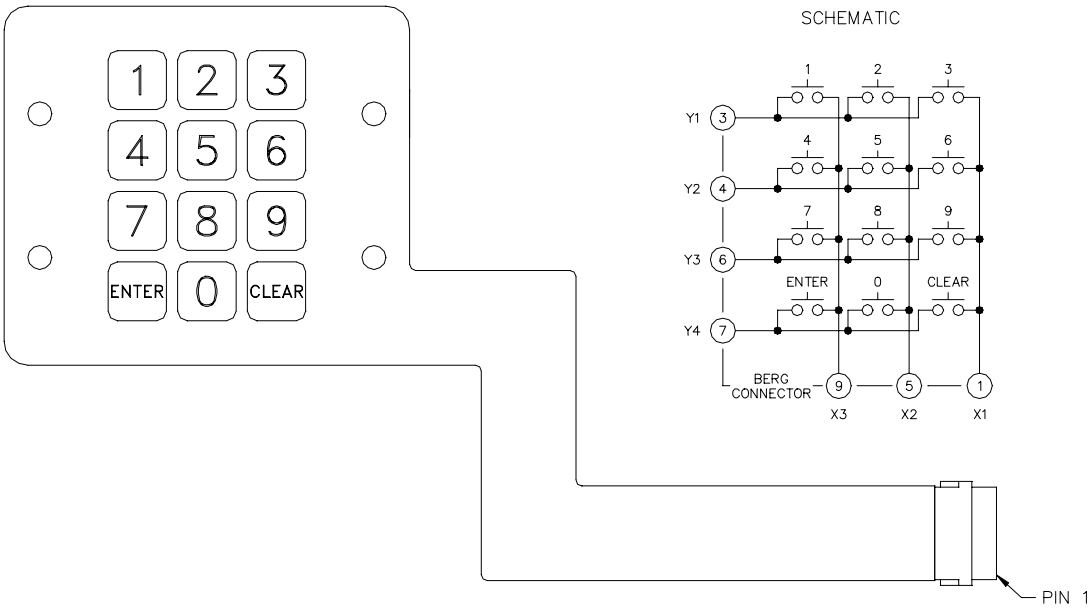

Connector

MPU Interface

Pinout	Pin	Wire	Function	Voltage
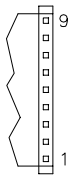	1		X1–Output to CLEAR, 9, 6, 3	0 VDC–Key pressed, Off–Not pressed
	2		+5 VDC	+5 VDC
	3		Y1–Input from 1, 2, 3	0 VDC–Key pressed, +5 VDC–Not pressed
	4		Y2–Input from 4, 5, 6	0 VDC–Key pressed, +5 VDC–Not pressed
	5		X2–Output to 0, 8, 5, 2	0 VDC–Key pressed, Off–Not pressed
	6		Y3–Input from 7, 8, 9	0 VDC–Key pressed, +5 VDC–Not pressed
	7		Y4–Input from ENTER, 0, CLEAR	0 VDC–Key pressed, +5 VDC–Not pressed
	8		DC ground	DC ground
	9		X3–Output to ENTER, 7, 4, 1	0 VDC–Key pressed, Off–Not pressed

Layout - Membrane with Rubber Boot

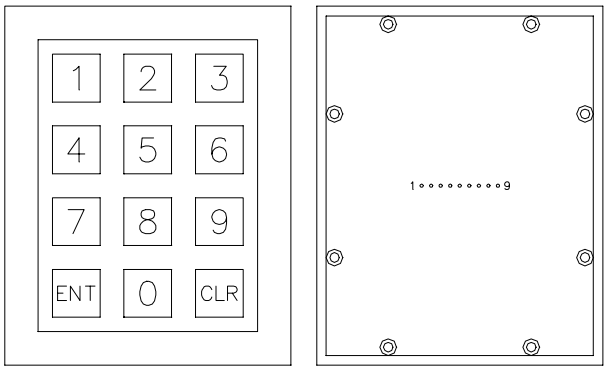

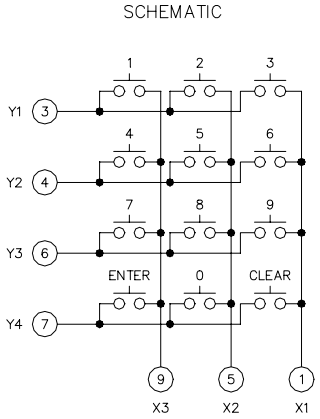

Connector

MPU Interface

Pinout	Pin	Wire	Function	Voltage
1 ∘∘∘∘∘∘∘∘∘ 9	1	Red	X1–Output to CLEAR, 9, 6, 3	0 VDC–Key pressed, Off–Not pressed
	2	N/C	+5 VDC	+5 VDC
	3	White	Y1–Input from 1, 2, 3	0 VDC–Key pressed, +5 VDC–Not pressed
	4	Green	Y2–Input from 4, 5, 6	0 VDC–Key pressed, +5 VDC–Not pressed
	5	Brown	X2–Output to 0, 8, 5, 2	0 VDC–Key pressed, Off–Not pressed
	6	Blue	Y3–Input from 7, 8, 9	0 VDC–Key pressed, +5 VDC–Not pressed
	7	Orange	Y4–Input from ENTER, 0, CLEAR	0 VDC–Key pressed, +5 VDC–Not pressed
	8	N/C	DC ground	DC ground
	9	Yellow	X3–Output to ENTER, 7, 4, 1	0 VDC–Key pressed, Off–Not pressed

INTERNAL MODEM (C01588) - OPTIONAL

The Internal modem:

- provides communication from the Series 1000 to a remote polling station.
- provides either 300 or 1200 baud communication rate.

Layout

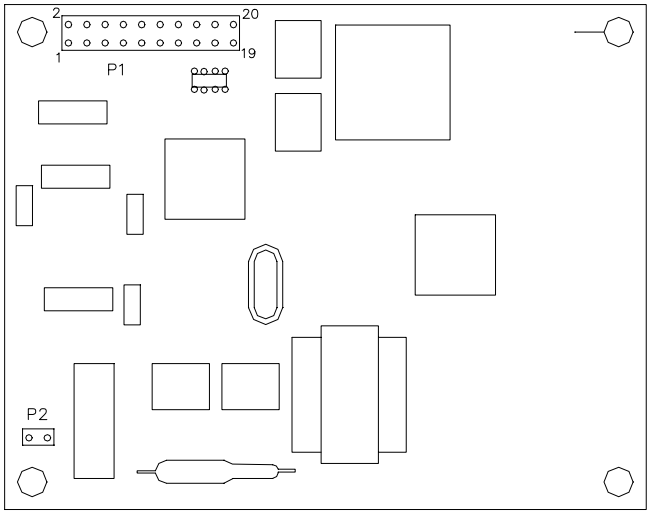

Connectors

P1 - MPU PCB Interface

Pinout	Pin	Function	Voltage
P1 (20–19, 2–1)	1	Tx data	⊓⊓⊔ +5 VDC signal output
	4	−12 VDC	−12 VDC
	7	$\overline{DTR}$	0 VDC−Output enabled
	9	Modem reset	⊔⊓ Modem reset
	10	DC ground	DC ground
	13	+12 VDC	+12 VDC
	14	+5 VDC	+5 VDC
	15	Rx data	⊓⊓⊔ +5 VDC signal input
	17	$\overline{CD}$	0 VDC−Input enabled
	18	DC ground	DC ground
	19	+5 VDC	+5 VDC
	20	DC ground	DC ground

P2 - Telephone Line Interface

Pins 1 and 2 must be connected to a 2-wire, voice-grade telephone line.

Section 3

STANDARD POST ASSEMBLY

DESCRIPTION

There are two post types available, the standard post and a receipt printer post. This section covers the standard post; the following section covers the receipt printer post.

All solid state relays and manual override switches, which control power to the fuel dispensing equipment, are located in the post. The wiring for all equipment connected to the Series 1000 is terminated in the post.

Layout

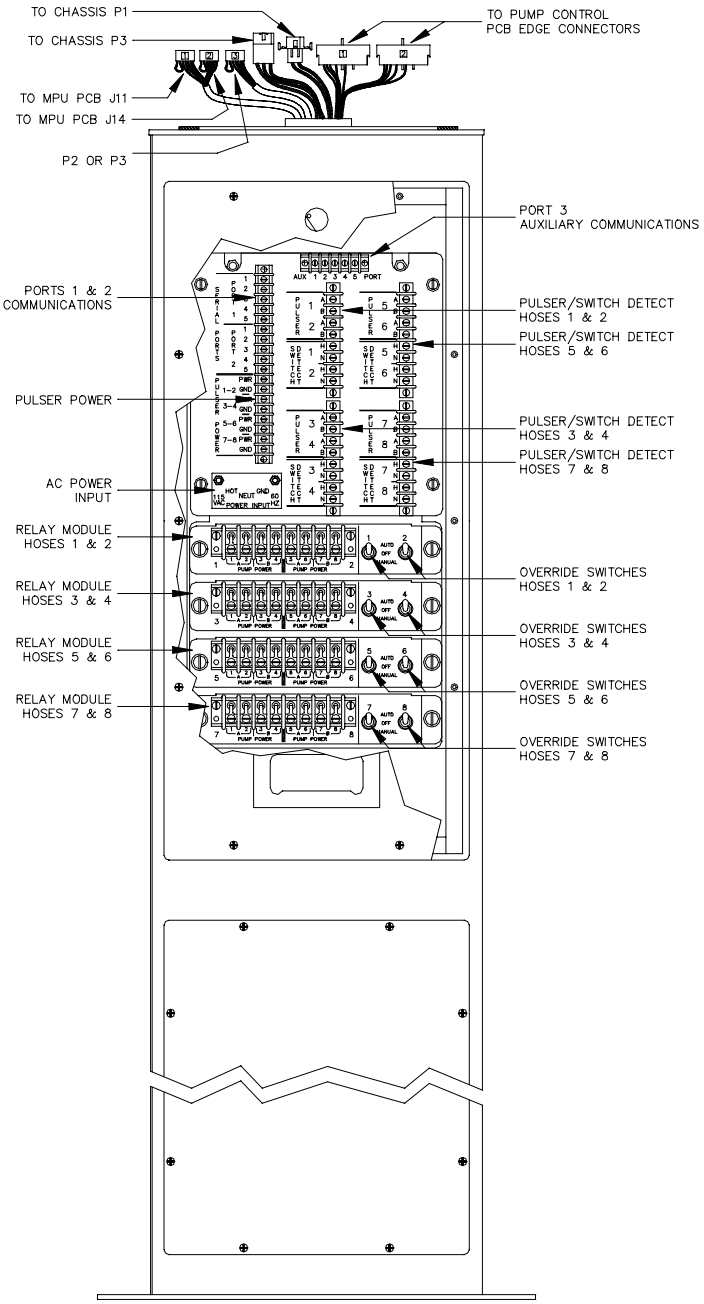

WIRING

All field wiring is made to the Series 1000 via terminal blocks located in the post. The wiring is split into two classifications: AC and DC. Separate conduits must be provided for each. AC and DC wiring must never be mixed in any common conduit, junction box, or trough, except as noted in the **Communication Wiring** section of the *Series 1000 Installation Manual*.

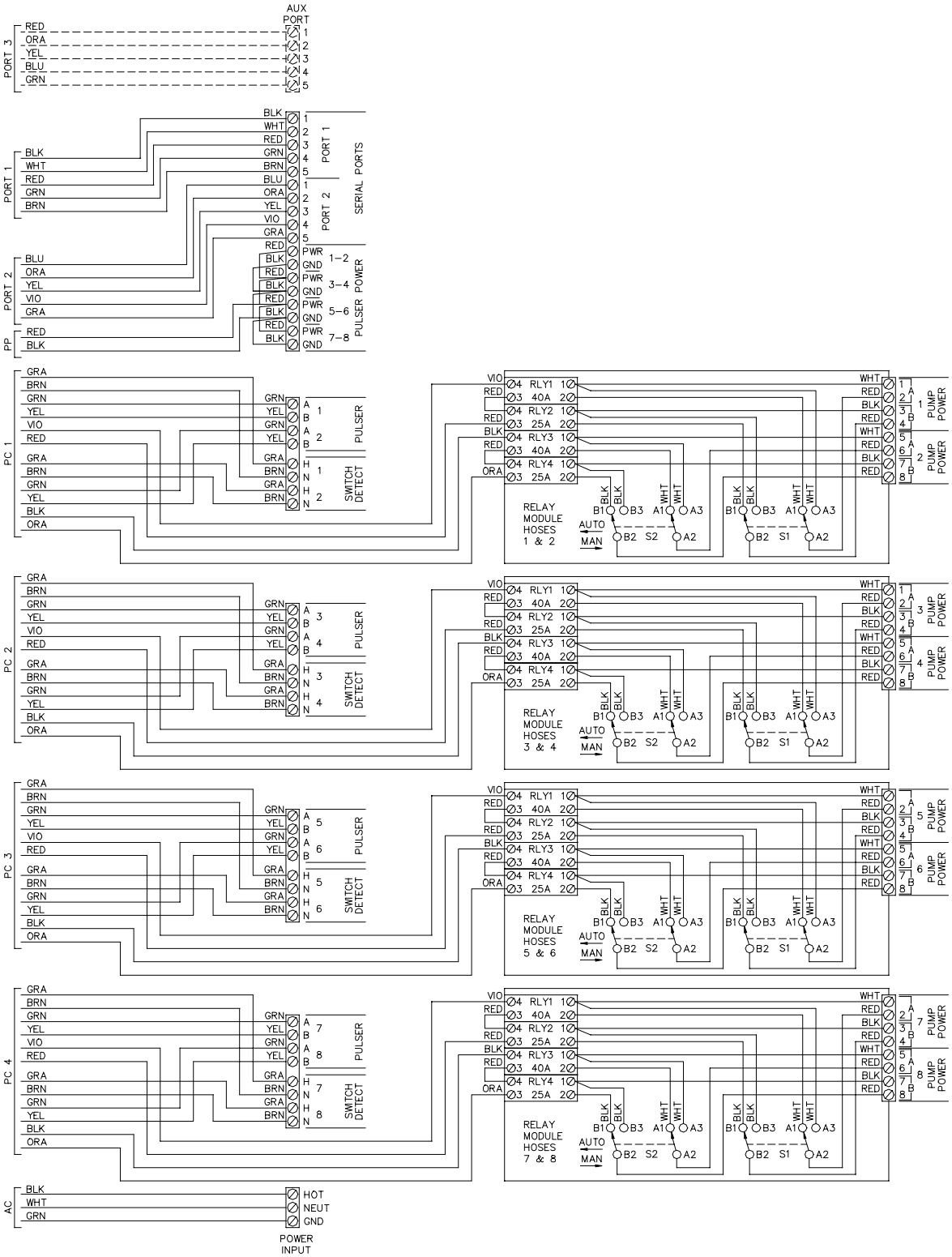

CONNECTORS

Auxiliary Port (Tank Monitor Interface) TB and Connector

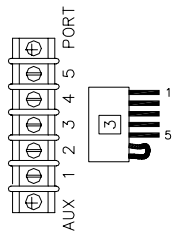

			RS232 (P2) On Auxiliary Comm. PCB		RS422 (P3) On Auxiliary Comm. PCB		
Pinout	Pin	Wire	Function	Voltage	Function		Voltage
	1	Red	Tx data	⊓⊔ ±12 VDC signal output	RS422 Tx+	To remote device	⊓⊔ +5 VDC signal between pins 1 & 2
	2	Orange	DTR	+12 VDC–Output enabled	RS422 Tx–		
	3	Yellow	Rx data	⊓⊔ ±12 VDC signal input	RS422 Rx+	From remote device	⊓⊔ +5 VDC signal between pins 3 & 4
	4	Blue	CD	+12 VDC–Input enabled	RS422 Rx–		
	5	Green	DC ground	DC ground	DC ground		DC ground

Port 1 TB and Connector

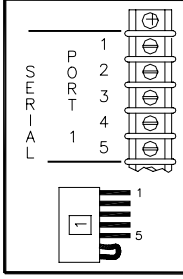

			RS232 (J11) On MPU PCB		RS422 (J12) On MPU PCB		
Pinout	Pin	Wire	Function	Voltage	Function		Voltage
	1	Black	Tx data	⊓⊔ ±12 VDC signal output	RS422 Tx+	To remote device	⊓⊔ +5 VDC signal between pins 1 & 2
	2	White	DTR	+12 VDC–Output enabled	RS422 Tx–		
	3	Red	Rx data	⊓⊔ ±12 VDC signal input	RS422 Rx+	From remote device	⊓⊔ +5 VDC signal between pins 3 & 4
	4	Green	CD	+12 VDC–Input enabled	RS422 Rx–		
	5	Brown	DC ground	DC ground	DC ground		DC ground

Port 2 TB and Connector

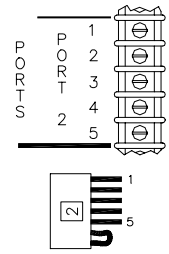

			RS232 (J14) On MPU PCB		RS422 (J15) On MPU PCB		
Pinout	Pin	Wire	Function	Voltage	Function		Voltage
	1	Blue	Tx data	⊓⊔ ±12 VDC signal output	RS422 Tx+	To remote device	⊓⊔ +5 VDC signal between pins 1 & 2
	2	Orange	DTR	+12 VDC–Output enabled	RS422 Tx–		
	3	Yellow	Rx data	⊓⊔ ±12 VDC signal input	RS422 Rx+	From remote device	⊓⊔ +5 VDC signal between pins 3 & 4
	4	Violet	CD	+12 VDC–Input enabled	RS422 Rx–		
	5	Gray	DC ground	DC ground	DC ground		DC ground

Pulser Power TB

Pinout	Position	Function	Voltage
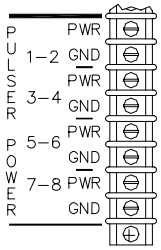	1–2 PWR	Pulser power (+12 VDC)	+12 VDC
	1–2 GND	Pulser DC ground	DC ground
	3–4 PWR	Pulser power (+12 VDC)	+12 VDC
	3–4 GND	Pulser DC ground	DC ground
	5–6 PWR	Pulser power (+12 VDC)	+12 VDC
	5–6 GND	Pulser DC ground	DC ground
	7–8 PWR	Pulser power (+12 VDC)	+12 VDC
	7–8 GND	Pulser DC ground	DC ground

Pulser Power Connector

Pinout	Pin	Function	Voltage
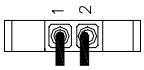 WIRE END VIEW	1	Pulser +12 VDC power	+12 VDC
	2	Pulser DC ground	DC ground

AC Power TB and Connector

Pinout	TB Position	Pin	Function	Voltage
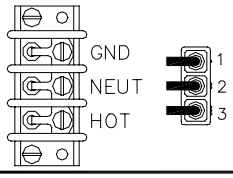	HOT	1	System power–AC hot	115 VAC
	NEUT	2	System power–AC neutral	AC neutral
	GND	3	System power–AC ground	AC ground

Pulser/Switch Detect TB (Hoses 1 & 2 shown)

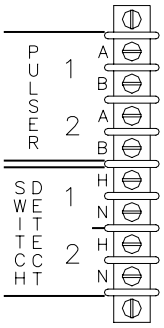

Pinout	Position	Function	Voltage
	1 A	Hose 1–pulser positive input	Pulser voltage (usually +12 VDC)
	1 B	Hose 1–pulser negative input	⎍ Negative signal from pulser
	2 A	Hose 2–pulser positive input	Pulser voltage (usually +12 VDC)
	2 B	Hose 2–pulser negative input	⎍ Negative signal from pulser
	1 H	Hose 1–switch detect hot input	115 VAC–active
	1 N	Hose 1–switch detect neutral input	AC neutral
	2 H	Hose 2–switch detect hot input	115 VAC–active
	2 N	Hose 2–switch detect neutral input	AC neutral

Pulser/Switch Detect/Relay Drive Connector - Hose 1

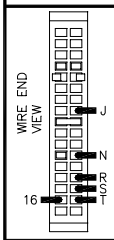

Pinout	Connector	Wire	Function	Voltage
	J	Gray	Switch detect hot	115 VAC–active
	N	Brown	Switch detect neutral	AC neutral
	R	Green	Pulser +	Pulser voltage (usually +12 VDC)
	S	Yellow	Pulser –	⎍ Negative signal from pulser
	16	Red	Relay +12 VDC	+12 VDC
	T	Violet	Relay drive	0 VDC–relay on

Pulser/Switch Detect/Relay Drive Connector - Hose 2

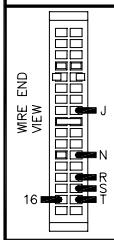

Pinout	Connector	Wire	Function	Voltage
	J	Gray	Switch detect hot	115 VAC–active
	N	Brown	Switch detect neutral	AC neutral
	R	Green	Pulser +	Pulser voltage (usually +12 VDC)
	S	Yellow	Pulser –	⎍ Negative signal from pulser
	16	Orange	Relay +12 VDC	+12 VDC
	T	Black	Relay drive	0 VDC–relay on

RELAY ASSEMBLY

The relay assembly:

- controls two hose outlets
- provides a switch for each hose outlet to operate the hose outlet in automatic or manual bypass modes, or turn off the hose outlet

Layout

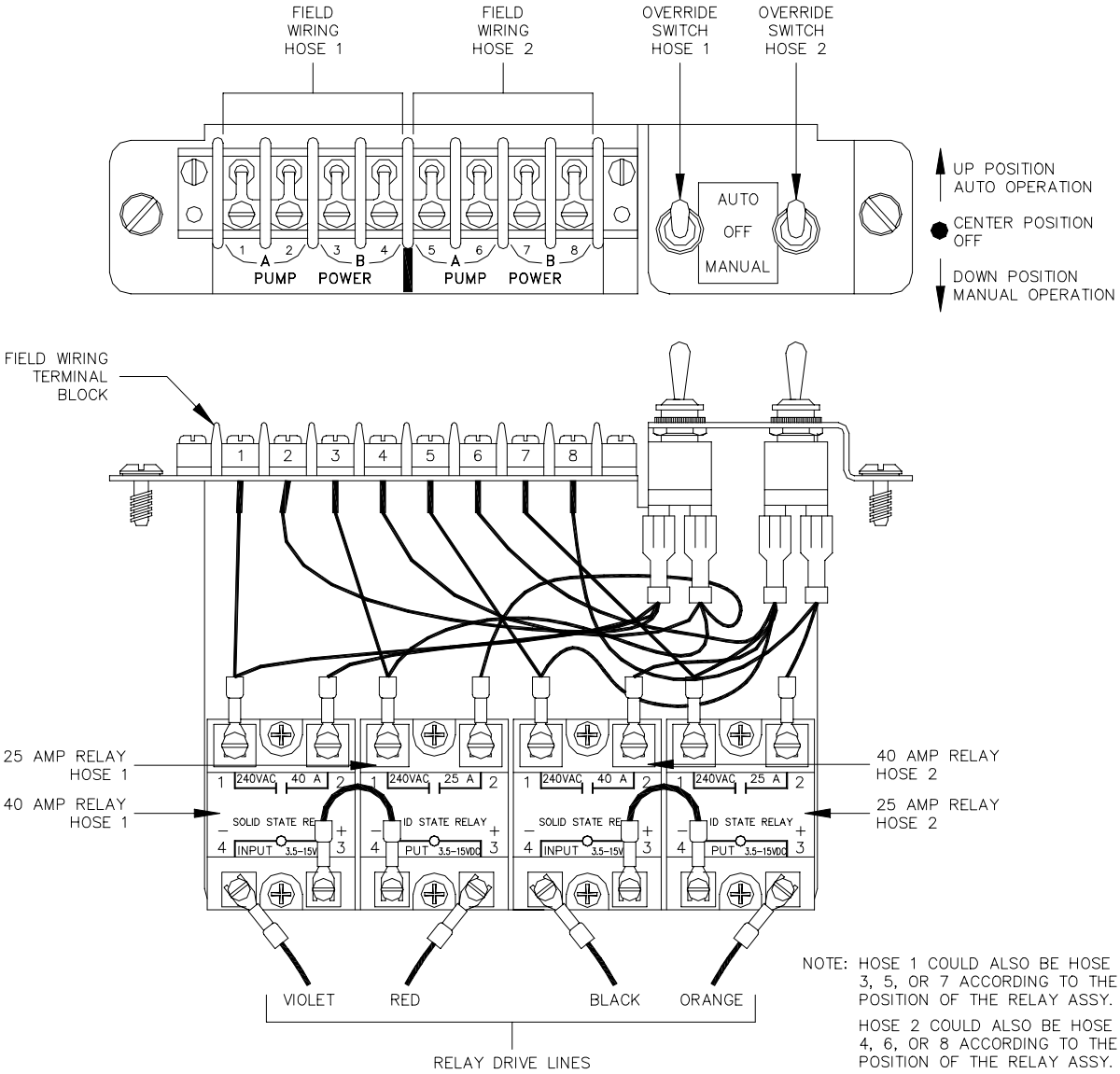

Wiring

Field Wiring Terminal Block

Pinout	Position	Hose/Contacts	Function	Voltage
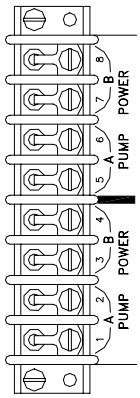	1	Hose 1/A	AC power from breaker panel	115 VAC
	2	Hose 1/A	AC power to dispenser	115 VAC–on See note
	3	Hose 1/B	AC power from breaker panel	115 VAC
	4	Hose 1/B	AC power to dispenser	115 VAC–on See note
	5	Hose 2/A	AC power from breaker panel	115 VAC
	6	Hose 2/A	AC power to dispenser	115 VAC–on See note
	7	Hose 2/B	AC power from breaker panel	115 VAC
	8	Hose 2/B	AC power to dispenser	115 VAC–on See note

NOTE: AC power may appear to be present on this position even when the relay is not energized. To test the actual condition of the relay, measure this point under a load. In some cases, this can be accomplished simply by turning on a pump handle.

Relay Drive Lines

Relay	Size	Pin	Wire	Function	Voltage
Hose 1/A	40 Amp	4	Violet	Hose 1 relay drive	0 VDC–on
		3	Red	Interconnect	
Hose 1/B	25 Amp	4	Red	Interconnect	
		3	Red	+12 VDC	+12 VDC
Hose 2/A	40 Amp	4	Black	Hose 2 relay drive	0 VDC–on
		3	Red	Interconnect	
Hose 2/B	25 Amp	4	Red	Interconnect	
		3	Orange	+12 VDC	+12 VDC

Schematic

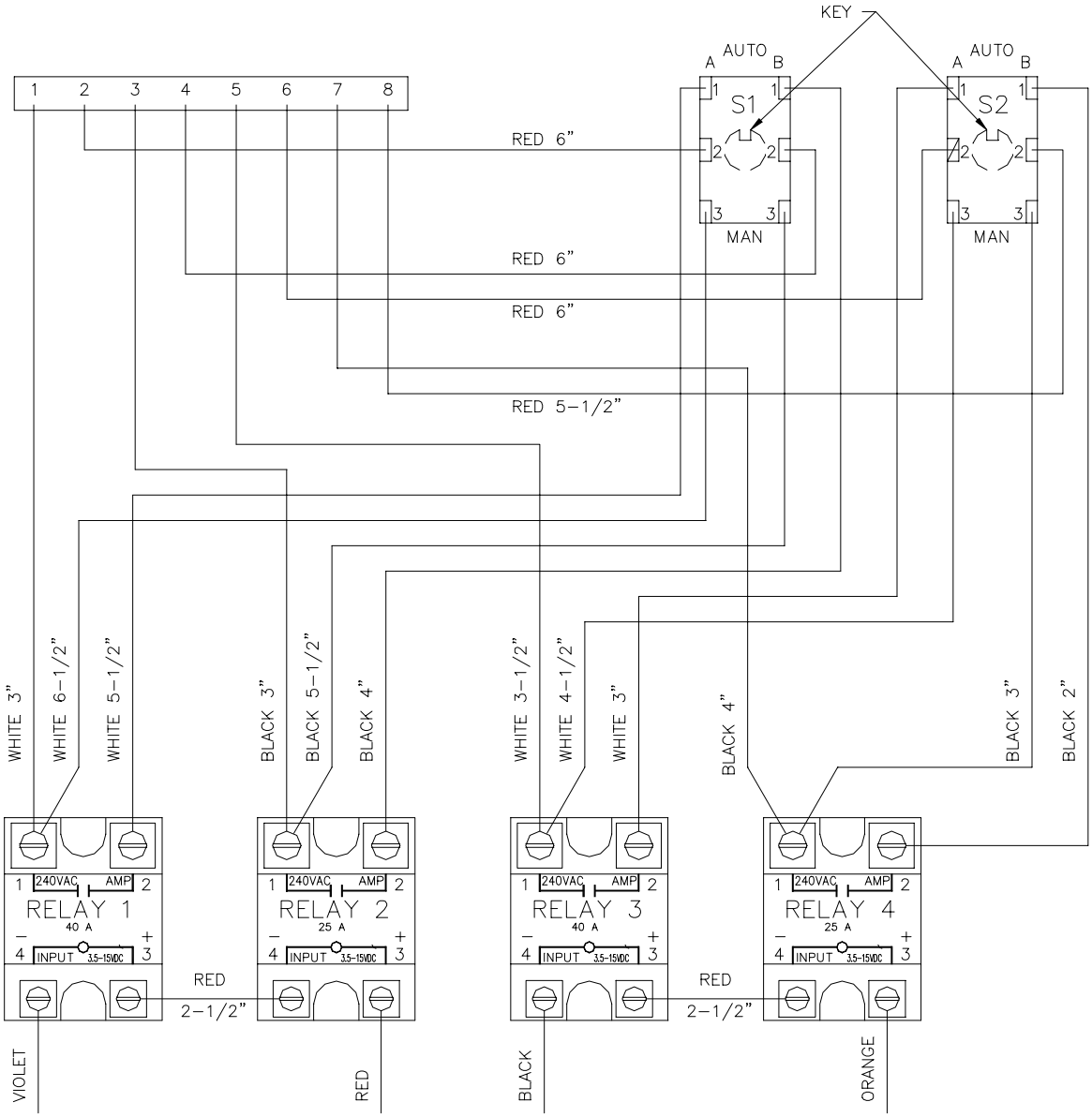
KEY
AUTO
A
B
S1
S2
MAN
RED 6"
RED 6"
RED 6"
RED 5-1/2"
WHITE 3"
WHITE 6-1/2"
WHITE 5-1/2"
BLACK 3"
BLACK 5-1/2"
BLACK 4"
WHITE 3-1/2"
WHITE 4-1/2"
WHITE 3"
BLACK 4"
BLACK 3"
BLACK 2"
240VAC
AMP
RELAY 1
40 A
RELAY 2
25 A
RELAY 3
40 A
RELAY 4
25 A
INPUT
3.5-15VDC
RED
2-1/2"
VIOLET
RED
BLACK
ORANGE

Section 4

RECEIPT PRINTER POST

DESCRIPTION

The GASBOY Island Receipt Printer is a compact multi-purpose dot-matrix printer that enables you to print receipts for fueling transactions at the island.

The printer is housed within the upper part of the post. A printer access door is located on the side of the post. Inside, the printer is mounted on a sliding drawer that enables you to easily slide it out for servicing or maintenance, and then replace it. A receipt door at the front of the post provides customer access to receipts. Indicator lamps, on the post of the receipt printer door indicate PAPER LOW and PAPER OUT conditions.

The pump control and terminal block configuration are rearranged in the Receipt Printer Post to allow room for the printer assembly. All connections and point-to-point wiring for these connections are the same as a standard post.

Layout - Right Side

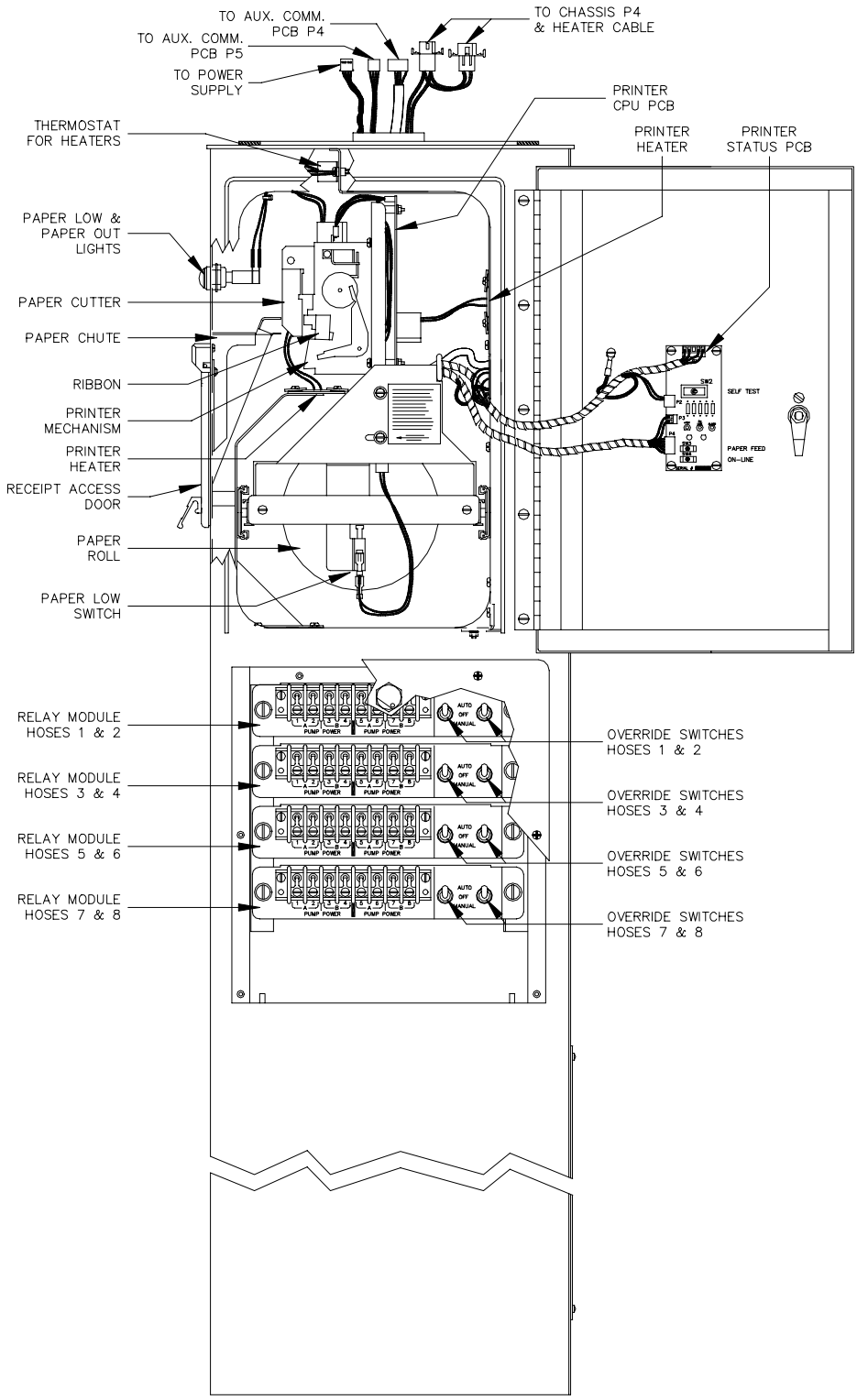

Layout - Left Side

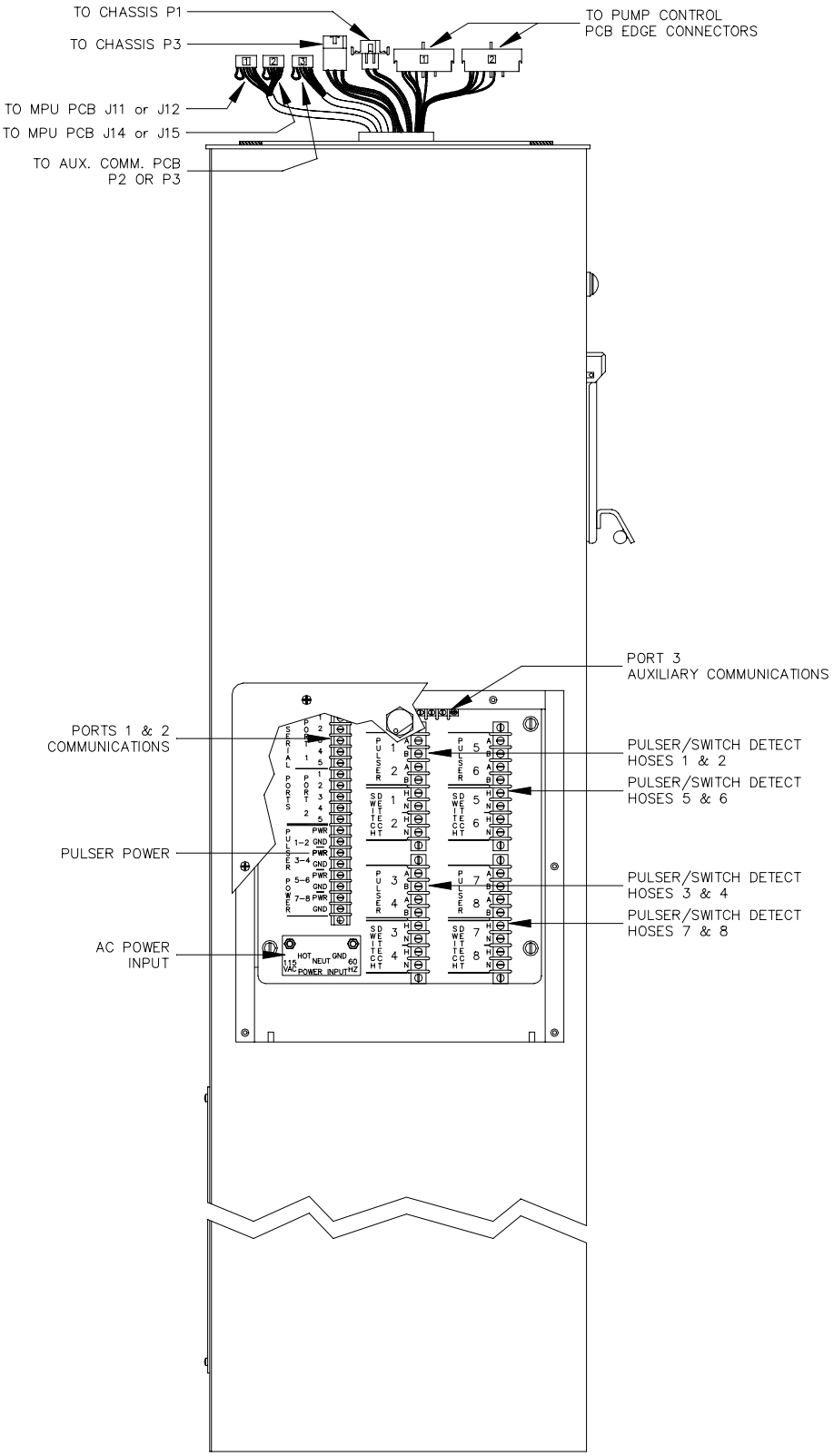

Lamps

The two lamps on the front of the post indicate the status of the paper roll.

Lamp	Function
PAPER LOW	Paper almost depleted
PAPER OUT	Paper depleted

Wiring

There are no field connections made directly to the receipt printer. All field wiring is made to the terminal blocks located in the lower half of the post. The power and data lines necessary to control the printer are fed from the head assembly and are pre-wired from the factory.

Connectors

RS-232 Communication to P4 on Auxiliary Communications PCB

Pinout	Pin	Wire	Function	Voltage
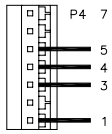	1	Red	Tx data to printer	⊓⊔ ±12 VDC
	3	Black	Rx data from printer	⊓⊔ ±12 VDC
	4	Gray	Carrier detect	+12 VDC–On
	5	Brown	DC ground	DC ground
	2,6,7	N/C		

Printer Status to P5 on Auxiliary Communications PCB

Pinout	Pin	Wire	Function	Voltage
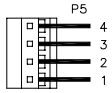	1	Yellow	Paper low switch input	0 VDC–Paper low switch on
	2	Green	Self–test switch input	0 VDC–Test switch on
	3	Violet	Paper low lamp drive	0 VDC–Paper low lamp on
	4	Gray	Paper out lamp drive	0 VDC–Paper out lamp on

DC Power to Power Supply

Pinout	Pin	Wire	Function	Voltage
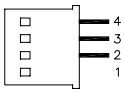	1	Orange	+5 VDC	+5 VDC
	2	Black	DC ground	DC ground
	3	Red	+12 VDC	+12 VDC
	4	N/C		

Heater Power to P4 on Chassis

Pinout	Pin	Wire	Function	Voltage
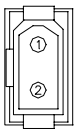	1	Black	AC hot for heaters	115 VAC
	2	White	AC neutral for heaters	AC neutral

Chassis Wiring

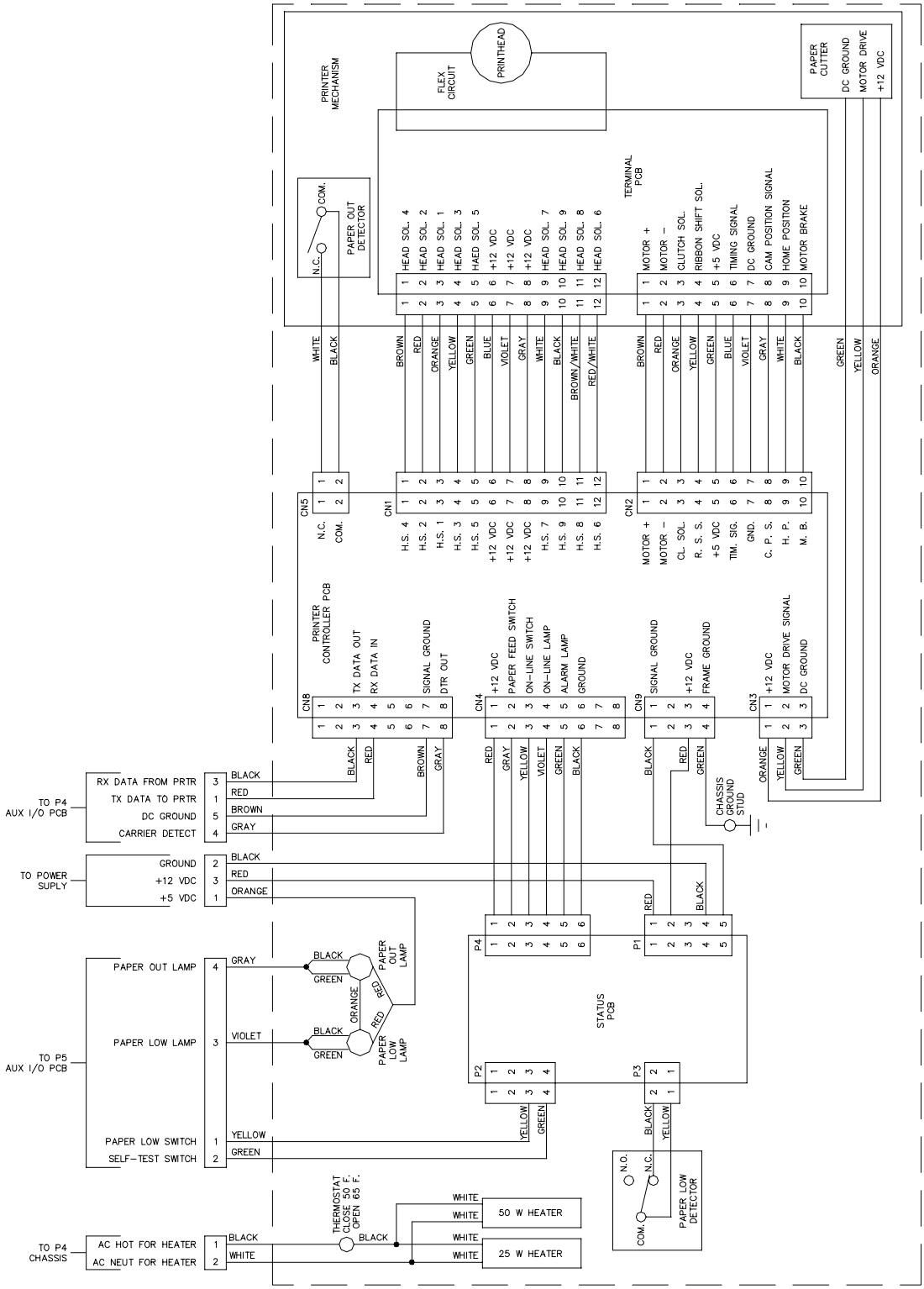

STAR PRINTER CONTROLLER PCB (C08933)

The Star Printer Controller PCB:

- processes data to and from the head assembly
- contains the hardware necessary to control the printer mechanism and cutter
- monitors the out of paper sensor

Layout

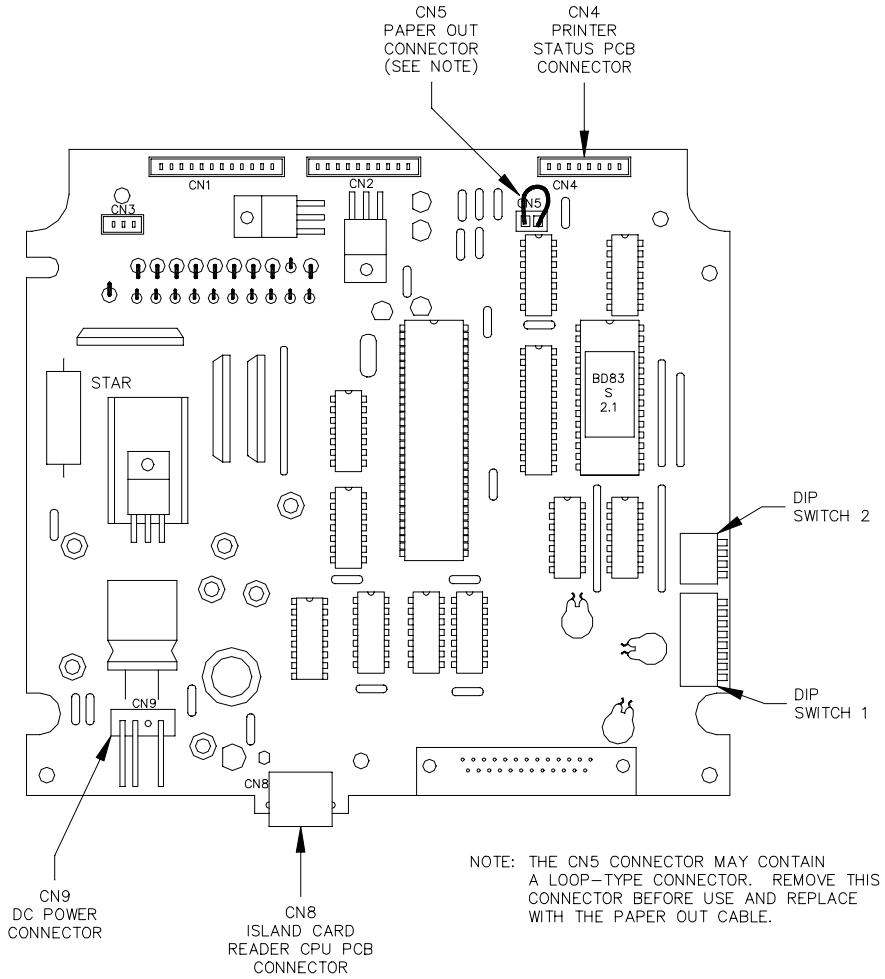

Connectors (Not Related to Printer Mechanism)

CN4 - Status PCB

Pinout	Pin	Wire	Function	Voltage
CN4	1	Red	+12 VDC	+12 VDC
	2	Gray	Paper feed input signal	0 VDC – paper feed
	3	Yellow	On–Line input signal	0 VDC – toggles mode
	4	Violet	On–Line lamp drive	0 VDC – On–Line mode
	5	Green	Alarm lamp drive	0 VDC – paper out/mach. error
	6	Black	DC Ground	DC Ground
	7		N/C	
	8		N/C	

CN8 - RS-232 From Auxiliary I/O PCB

Pinout	Pin	Wire	Function	Voltage
CN8	1	Blue	N/C	
	2	Orange	N/C	
	3	Black	TX Data output	⎍⎍ +12VDC
	4	Red	RX Data input	⎍⎍ +12VDC
	5	Green	N/C	
	6	Yellow	N/C	
	7	Brown	Signal ground	DC ground
	8	Gray	DTR output	+12VDC – On

CN9 - DC Power

Pinout	Pin	Wire	Function	Voltage
CN9	1	Black	DC Ground	DC Ground
	2			
	3	Red	+12VDC	+12VDC
	4	Green	Chassis Ground	Chassis Ground

Switches

The controller PCB dip switches are set at the factory prior to shipment. For proper operation of the printer, the controller PCB switch settings should be as shown. The location of these switches is also shown.

Switch	DSW1	DSW2
1	On	On
2	On	On
3	On	On
4	On	Off
5	Off	–
6	On	–
7	On	–
8	Off	–

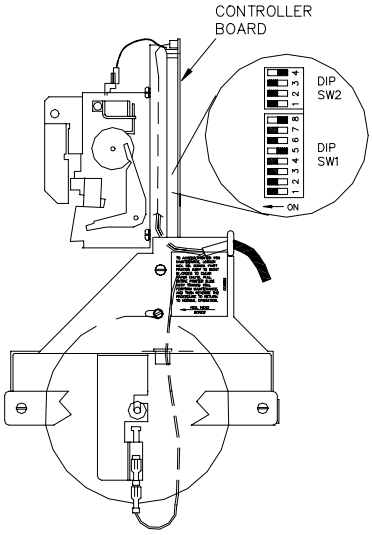

PRINTER STATUS PCB (C04665)

The printer status PCB is mounted on the printer access door. This PCB:

- contains the switches for power, self-test, paper feed, and on-line mode
- contains diagnostic LED's to monitor DC power, on-line/off-line mode, and errors occurring in the printer mechanism
- provides an interface between the paper low sensor and the auxiliary communications PCB

Layout

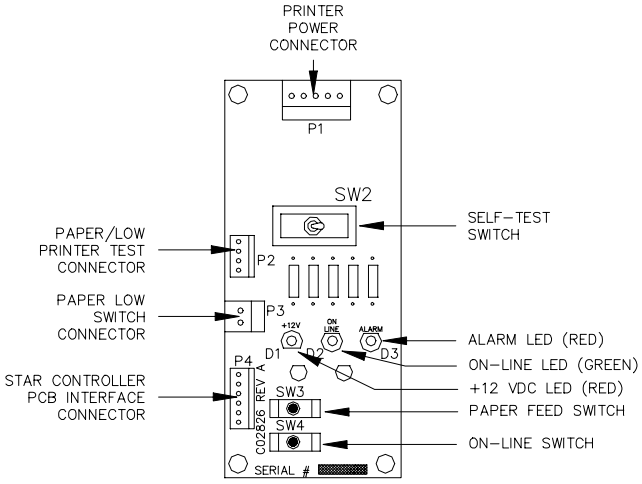

LED Indicators

LED indicators are provided to allow you to view the status of the receipt printer.

LED	Color	Function
D1	Red	+12 VDC
D2	Green	On–Line
D3	Red	Alarm

+12 VDC Gives a rough indication of the +12 VDC supply to the printer. It should be lit whenever SW1 (Power) is on.

On-line Shows if the printer is in the on-line mode. This lamp must be on to print receipts or run self-test.

Alarm Will light if a mechanical failure occurs or when the printer runs out of paper.

Connectors

P1 - DC Power

Pinout	Pin	Wire	Function	Voltage
P1 (1–5)	1	Red	+12 VDC in from power supply	+12 VDC
	2	Red	+12 VDC out to Star Controller Board	+12 VDC
	3		N/C	
	4	Black	DC Ground from Power Supply	DC Ground
	5	Black	DC Ground to Star Controller Board	DC Ground

P2 - Paper Low & Printer Test Outputs

Pinout	Pin	Wire	Function	Voltage
P2	1		N/C	
	2		N/C	
	3	Yellow	Paper Low–output to Aux. Comm. PCB	+12 VDC–Full, 0 VDC–Low
	4	Green	Printer test–output to Aux. Comm. PCB	0VDC–Switch closed

P3 - Paper Low Switch

Pinout	Pin	Wire	Function	Voltage
P3	1	Yellow	Common from paper low switch	+12 VDC–Full, 0 VDC–Low
	2	Black	DC ground to NC on switch	DC Ground

P4 - Status PCB

Pinout	Pin	Wire	Function	Voltage
P4	1	Red	+12 VDC from Star Controller PCB	+12 VDC
	2	Gray	Paper feed output to Star PCB	0 VDC–SW3 depressed
	3	Yellow	Online output to Star PCB	0 VDC–SW4 depressed
	4	Violet	Online LED input from Star PCB	.2 VDC–Off, 1.0 VDC–On
	5	Green	Alarm LED input from Star PCB	.2 VDC–Off, 1.0 VDC–On
	6	Black	DC Ground	DC Ground

Switches

Switch		Function
SW1	POWER	On=Power on
SW2	SELF–TEST	On=Self–test activated
SW3	PAPER FEED	Push to feed paper
SW4	ON–LINE	Push to change on–line status

SELF-TEST The self-test switch starts a self-test on the printer. It will print a barber-pole pattern of all characters that may be printed on a receipt. Switching back to the right stops the printing and cuts the paper.

PAPER FEED This switch causes a continuous feed of paper. This is used when loading a new roll of paper.

ON-LINE This switch alternately puts the printer in the on-line or off-line mode. The printer must always be on-line (green lamp on) to print receipts or perform a self-test.

RECEIPT PRINTER MAINTENANCE

Ordering New Paper or Ribbon

When replacing paper or ribbon, use only GASBOY-supplied parts. Failure to do so will void the GASBOY warranty.

- C08946 Paper, #RF-4, 5-5, Low Bulk - Star
- C08941 Ribbon, #SF-01P, Purple - Star

It is recommended, in most cases, that the ribbon be replaced every 4000-5000 receipts or 2 to 3 rolls of paper to ensure acceptable print quality. Environmental conditions, such as temperature and humidity, may affect the life of the ribbon.

Accessing the Printer

Before beginning any of the following maintenance procedures, you must pull the printer out to a serviceable position. Follow these steps:

1. Open the printer access door and loosen the hex head screw.

2. Pivot the printer assembly to the right in order to clear the paper chute.

3. Pull the entire printer slide assembly toward you.

4. Perform any required maintenance or service. Reverse this procedure to return the printer to normal operation.

Changing the Paper

Removing the Paper

1. Follow the procedure for accessing the printer.
2. Cut the paper where it comes off of the roll.
3. Press the PAPER FEED switch on the printer status board until all of the paper is removed from the printer mechanism.
4. Remove the paper roll, being careful not to bend the PAPER LOW switch.

Installing the Paper

1. Insert spindle into paper roll.
2. Insert roll into holder, being careful not to bend the PAPER LOW switch.
3. Make sure the paper feeds from the back of the roll.
4. Insert the paper into the paper feed slot while pressing the PAPER FEED switch on the printer status board.
5. Make sure the paper feeds easily out of the paper cutter.
6. Perform a short self-test.
7. Return the printer slide assembly to its normal position and lock it in place with the hex head screw.
8. Close and lock the printer access door.

   NOTE: Make sure the printer access door is drawn tight in order to insure a watertight seal.

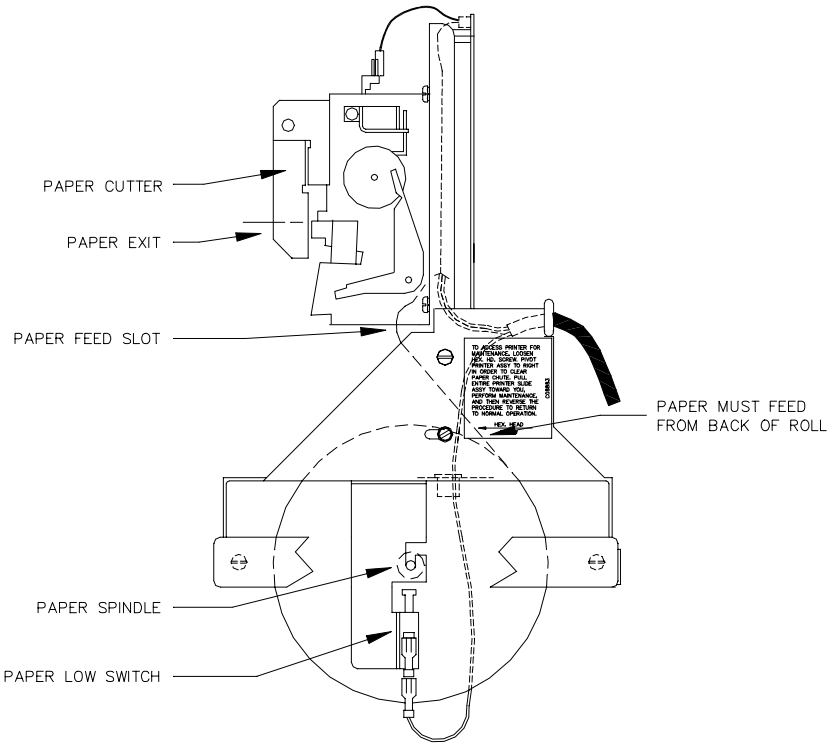

PRINTER SIDE VIEW

Changing the Ribbon

Removing Old Ribbon Spools

1. Follow the procedure for accessing the printer.
2. Slide the cutter latch on the paper cutter unit to the right and swing the paper cutter up (Figure A and B).
3. Rotate both spools to create some slack in the ribbon.
4. Pull one spool off of the shaft while pushing the ribbon detecting lever out of the way (Figure C). Repeat for the other spool.

Installing New Ribbon Spools

1. Place the ribbon spool onto the left shaft with the spool-driving pins pointing toward the printer (Figure C).
2. Feed the ribbon over the left ribbon guide, under the print head, and over the right ribbon guide.
3. Repeat Step 1 for the right spool.
4. Rotate both spools to remove the slack from the ribbon.
5. Return the paper cutter unit to the normal position and slide the cutter latch to the left to lock (Figure A).
6. Perform a short self-test
7. Return the printer slide assembly to its normal position and lock it in place with the hex head screw.
8. Close and lock the printer access door.

   NOTE: Make sure the printer door lock is drawn tight in order to insure a watertight seal.

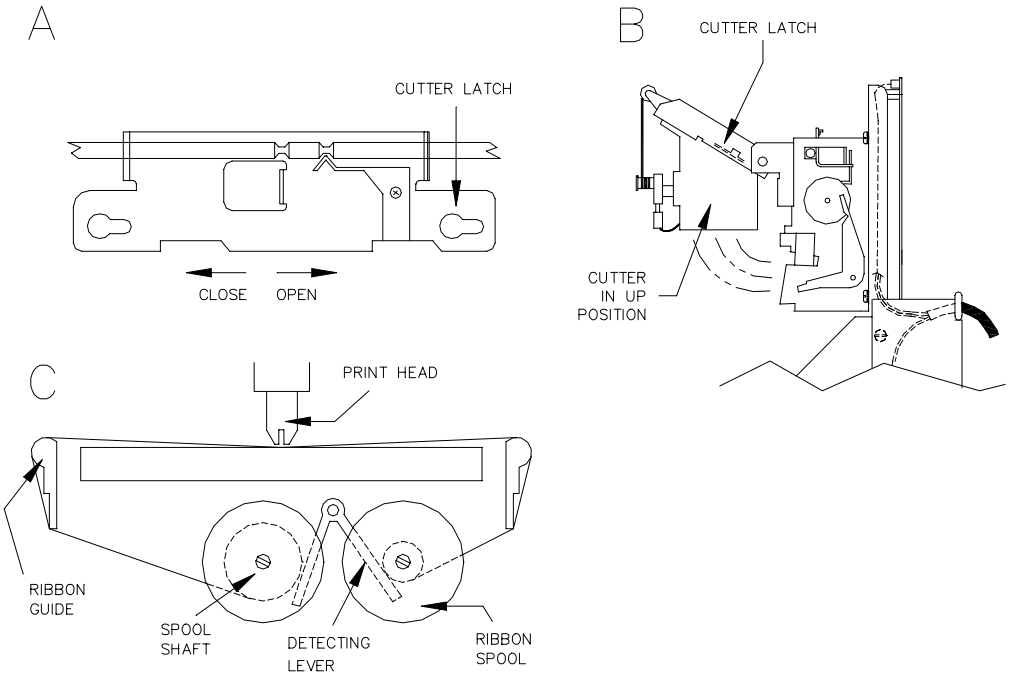

Adjusting Cutter Blades

Adjustment of the cutter blades may become necessary if the cutter fails to operate properly. This may be indicated by receipts not being completely cut or paper becoming jammed inside the printer. Cutter blades are sharp! Keep fingers away from sharp edges of blade while making adjustments.

Adjust After Incomplete Cuts

1. Follow the procedure for accessing the printer.
2. Loosen the hex adjusting screw (located on the lower left side of the cutter) using a 2.5 mm hex key. Do not use pliers; damage to the screw head may result. Pivot the bottom cutter blade upward. Tighten the hex screw to lock the blade in place.
3. Perform a few self-tests to make sure the cutter operates properly.
4. Return the printer slide assembly to its normal position and lock it in place with the hex head screw.
5. Close and lock the printer access door.

   NOTE: Make sure the printer door lock is drawn tight in order to insure a watertight seal.

Adjust After Paper Jams

1. Follow the procedure for accessing the printer.
2. Carefully remove any paper that may be stuck inside the printer.
3. Loosen the hex adjusting screw (located on the lower left side of the cutter) using a 2.5 mm hex key. Do not use pliers as damage to the screw head may result. Pivot the bottom cutter blade down. Tighten the hex screw to lock the blade in place.
4. Perform a few self-tests to make sure the cutter operates properly.
5. Return the printer slide assembly to its normal position and lock it in place with the hex head screw.
6. Close and lock the printer access door.

   NOTE: Make sure the printer door lock is drawn tight in order to insure a watertight seal.

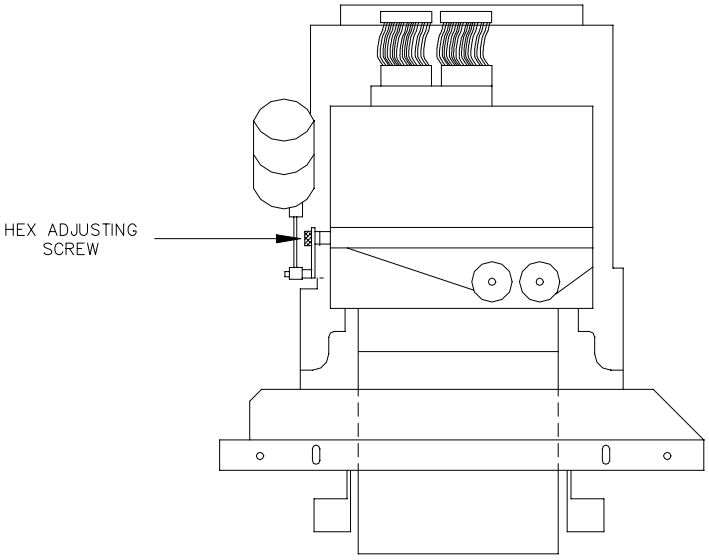

Section 5

DIAGNOSTIC KIT AND TESTS

DESCRIPTION OF KIT COMPONENTS

The Series 1000 diagnostic kit (GASBOY P/N C05757 or C05759) is a collection of troubleshooting aids which enable the user to pinpoint problems quickly and accurately. It consists of the following items:

- Diagnostic manual
- Autoranging digital multimeter (with kit number C05759 only)
- Plastic screwdriver
- Pump simulator/keypad tester
- RS-422 loopback connector
- RS-232 loopback connector
- Direct communication cable
- AC adapter cable
- Mag reader test cable

Diagnostic Manual
This Diagnostic Manual is your roadmap through the Series 1000. It explains how to use the diagnostic kit and the built-in diagnostic tests.

Autoranging Digital Multimeter
This optional multimeter measures the AC and DC voltage levels of the Series 1000 and its attached components to verify that they are within proper operating tolerances. The multimeter is an invaluable troubleshooting tool and should be purchased if you do not currently possess one. Its autoranging feature makes it very easy to use, even if you have no previous experience with meters.

Plastic Screwdriver
This tool is used to adjust the power supply, when necessary. Its plastic construction prevents any risk of electrical shock, which may occur from the exposed components of the supply.

Pump Simulator/Keypad Tester
Using this device to simulate a pump allows you to isolate a problem to a pump or to the Series 1000. As a keypad tester, this device tests the keypad to pinpoint a problem either in the keypad or in the Series 1000.

RS-422 Loopback Connector
This connector is placed on the Microprocessor PCB and is used with diagnostic test 5, to test the transmit and receive capabilities of both ports in either the RS-422 or RS-232 mode.

RS-232 Loopback Connector
This connector is placed at various points in the communication cabling and is used with diagnostic test 5 to test the transmit and receive capabilities of both ports in either the RS-422 or RS-232 mode. This connector may be used wherever a mating RS-232 connector exists (such as at the data terminal, etc).

Direct Communication Cable
This cable connects directly to either port of the Microprocessor PCB in the RS-232 mode to provide a direct connect RS-232 communication port. This allows a terminal to be used at the island for the Series 1000.

AC Adapter Cable
This cable provides an AC outlet at the Series 1000 to power a terminal. Use this cable only when connecting a terminal at the fueling island.

Mag Reader Test Cable
This cable is used with diagnostic test 9. It tests the mag reader section of the Microprocessor PCB to isolate a problem to either the mag card reader or the Microprocessor PCB.

DIAGNOSTIC TESTS

The Series 1000 provides 10 internal diagnostics that enable various system hardware tests and user functions. While they are helpful to the system user on a regular basis, these diagnostics also provide troubleshooting information to aid in determining and repairing system problems. This section describes the procedures to access and use the following diagnostic tests/functions:

- 0 Calculate PIN (Personal Identification Number) Function
- 1 Change Password Function
- 2 LCD Character Set Test
- 3 Card Data Display (Card Systems Only)
  Key Data Display (FleetKey Systems Only)
- 4 Keypad Test
- 5 Communication Ports Test *
- 6 RAM (Memory) Test
- 7 ROM (Program) Test
- 8 LCD Message Test
- 9 Mag Data Section Test ** (Mag Card Systems Only)
  Key Encoding *** (FleetKey Systems Only)

* A loopback test jumper is needed to execute this test
** A special test cable is needed to execute this test
***Available only if encoding option ordered

Entering and Exiting Diagnostic Mode

Before entering diagnostic mode, verify that all fueling transactions are complete. You cannot access this mode while a transaction is in progress.

1. Unlock and lower the rear door of the Series 1000.
2. As you look into the rear of the unit, the MPU PCB is mounted on the left side. The diagnostic switch is in the center of the rear edge of the MPU PCB. Under normal use, it should be in a down (off) position. Place the switch in an up (on) position. The LCD displays: **ENTER TEST 0-9**. This indicates the system is ready to execute any of the tests.
3. To select a test, press the keypad number for the test and press ENTER. The number appears on the LCD display as you type it. If you type an incorrect number, press CLEAR and enter a different number.

   NOTE: The following pages contain specific operating instructions for each test.
4. To exit diagnostic mode, return the diagnostic switch to the down (off) position. You can turn off the diagnostic switch at any point, even during a test. When diagnostic mode is off, the LCD display alternates between the idle message and **ENTER CARD** (card systems), **ENTER VEHICLE** (cardless systems), or **INSERT KEY** (FleetKey systems).
5. Close and lock the rear door.

Test 0 - Calculate PIN

Card Systems

This test reads a card and calculates the correct PIN (personal identification number) for the card.

1. Enter diagnostic mode as described previously. At the **ENTER TEST 0-9** prompt, press 0 and ENTER.

2. At the **ENTER CARD** prompt, insert the card for which the PIN is to be calculated.

3. At the **REMOVE CARD** prompt, remove the card from the reader. The PIN for this card appears on the LCD display.

4. To calculate another PIN, press any button except ENTER and repeat this procedure from Step 2.

   If you press ENTER at the **ENTER CARD** prompt, you are returned to the **ENTER TEST 0-9** prompt.

   To exit from diagnostic mode, turn off the diagnostic switch at any point.

Cardless Systems

This test calculates the correct PIN (personal identification number) based on the data entered as the second ID field.

1. Enter diagnostic mode as described previously. At the **ENTER TEST 0-9** prompt, press 0 and ENTER.

2. At the **ENTER XXXX** (**XXXX** is the second account field) prompt, type the second ID field data for which the PIN is to be calculated. The PIN for this vehicle record appears on the LCD display.

3. To calculate another PIN, press any button except ENTER and repeat this procedure from Step 2.

   If you press ENTER at the **ENTER XXXX** prompt, you are returned to the **ENTER TEST 0-9** prompt.

   To exit from diagnostic mode, turn off the diagnostic switch at any point.

FleetKey Systems

This test reads a key and calculates the correct PIN (personal identification number) for the key.

1. Enter diagnostic mode as described previously. At the **ENTER TEST 0-9** prompt, press 0 and ENTER.

2. At the **INSERT KEY** prompt, insert and turn the key for which the PIN is to be calculated.

3. The system displays **READING RECEPTACLE x** and then the PIN number.

4. To calculate another PIN, press any button except ENTER and repeat this procedure from Step 2.

   If you press ENTER at the **INSERT KEY** prompt, you are returned to the **ENTER TEST 0-9** prompt.

   To exit from diagnostic mode, turn off the diagnostic switch at any point.

Test 1 - Change Password Function

This test changes the Command Mode password from whatever it is back to **GASBOY**. This is useful when you lose or forget the password.

1. Enter diagnostic mode as described previously. At the **ENTER TEST 0-9** prompt, press 1 and ENTER.

2. At the **NEW PASSWORD?** prompt, press 1 and ENTER. The message **PASSWORD CHANGED** appears and the password changes back to **GASBOY**. The **ENTER TEST 0-9** prompt reappears.

   If you press any other button and ENTER at the **NEW PASSWORD?** prompt, the password remains unchanged and you are returned to the **ENTER TEST 0-9** prompt.

   To exit from diagnostic mode, turn off the diagnostic switch at any point.

Test 2 - LCD Character Set Test

This test is similar to a barberpole test. It verifies the display by displaying each character in the ASCII set.

1. Enter diagnostic mode as described previously. At the **ENTER TEST 0-9** prompt, press 2 and ENTER.

2. Press any key except ENTER to freeze the display. Press any key except ENTER to resume the test.

   If you press ENTER, you are returned to the **ENTER TEST 0-9** prompt.

   To exit from diagnostic mode, turn off the diagnostic switch at any point.

Test 3 - Display Data on Card or Key

Card Systems

This test reads and displays the information encoded on a card. This test is available only with card systems. If you have a cardless system and try to run this test, the LCD displays **TEST NOT AVAILABLE**.

1. Enter diagnostic mode as described previously. At the **ENTER TEST 0-9** prompt, press 3 and ENTER.

2. At the **ENTER CARD** prompt, insert the card for which the information is to be displayed.

3. At the **REMOVE CARD** prompt, remove the card from the reader. The display shows the first four digits encoded on the card.

4. Press any button, except ENTER to show the next four digits on the card. Continue this until all digits are read from the card. When the last digits are read, the **ENTER CARD** prompt reappears.

5. To read another card, insert the next card and repeat this procedure from Step 3. To return to the **ENTER TEST 0-9** prompt, press ENTER.

   To exit from diagnostic mode, turn off the diagnostic switch at any point.

FleetKey Systems

This test reads and displays the information encoded on a key. This test is available only with FleetKey systems.

1. Enter diagnostic mode as described previously. At the **ENTER TEST 0-9** prompt, press 3 and ENTER.

2. At the **INSERT KEY** prompt, insert and turn the key for which the information is to be displayed. The display shows the first field encoded on the key (**KEY TYPE**).

3. Press any button, except ENTER, to show the next field on the key. (Fields and data longer than 20 characters scroll across the display the next time you press a key). Continue this until all fields are read from the key. When the last digits are read, the **TURN KEY LEFT,REMOVE** prompt appears.

4. To read another key, insert the next key and repeat this procedure from Step 2. To return to the **ENTER TEST 0-9** prompt, press ENTER.

   To exit from diagnostic mode, turn off the diagnostic switch at any point.

Test 4 - Keypad Test

This test displays the information received from the keypad.

1. Enter diagnostic mode as described previously. At the **ENTER TEST 0-9** prompt, press 4 and ENTER.

2. At the **PRESS KEYS** prompt, press each key except ENTER that you wish to test. The LCD display shows the output of the key that was pressed.

3. Press ENTER to stop testing keys and return to the **ENTER TEST 0-9** prompt.

   To exit from diagnostic mode, turn off the diagnostic switch at any point.

Test 5 - Communication Ports and External Wiring Test

This test verifies that the serial ports and external communication wiring are functioning properly.

1. Enter diagnostic mode as described previously.
2. Turn off the system power.
3. Remove the port communication cable from the serial port 1 or serial port 2 connector on the MPU board and replace it with the RS-422 loopback connector supplied in the diagnostic kit.
4. Turn on the system power and wait 60 seconds.
5. At the **ENTER TEST 0-9** prompt, press 5 and ENTER.
6. At the **PORT 1 OR 2?** prompt, press the number for the port being tested (1 or 2) and press ENTER. If you press an incorrect number, press CLEAR to return to the **PORT 1 OR 2?** prompt. The LCD displays **PORT PASSED** or **PORT FAILED** and the **ENTER TEST 0-9** prompt reappears.
7. Remove the loopback connector from serial port 1 or serial port 2 and replace the cable removed in Step 3.

If testing of the external communication wiring is desired, continue with Step 8. If desired testing is completed, exit from diagnostic mode.

8. Remove the communication cable from the data terminal. Attach the RS-232 loopback connector, supplied in the diagnostic kit, to the communication cable.
9. At the **ENTER TEST 0-9** prompt, press 5 and ENTER.
10. At the **PORT 1 OR 2?** prompt, press the number for the port being tested (1 or 2) and press ENTER. If you press an incorrect number, press CLEAR to return to the **PORT 1 OR 2?** prompt. The LCD displays **PORT PASSED** or **PORT FAILED** and the **ENTER TEST 0-9** prompt reappears.
11. Remove the loopback connector from the communication cable and reconnect the cable to the data terminal.

    To exit from diagnostic mode, turn off the diagnostic switch at any point.

Test 6 - RAM (Memory) Test

This tests the RAM module to make sure each location can be written to and read from.

1. Enter diagnostic mode as described previously. At the **ENTER TEST 0-9** prompt, press 6 and ENTER. As the test runs, the message **** PLEASE WAIT **** is displayed, followed by either **RAM OK!** or **RAM FAILED!**. The **ENTER TEST 0-9** prompt reappears.

   *NOTE: If **RAM FAILED** appears, contact GASBOY Technical Service.*

   To exit from diagnostic mode, turn off the diagnostic switch at any point.

Test 7 - ROM (Program) Test

This test reads each location in the program chip (ROM), calculates a checksum and compares it to a checksum inserted in the program chip at the factory.

1. Enter diagnostic mode as described previously. At the **ENTER TEST 0-9** prompt, press 7 and ENTER. As the test runs, the message **** PLEASE WAIT **** is displayed, followed by either **ROM OK!** or **ROM FAILED!**. The **ENTER TEST 0-9** prompt reappears.

   *NOTE: If **ROM FAILED** appears, contact GASBOY Technical Service.*

   To exit from diagnostic mode, turn off the diagnostic switch at any point.

Test 8 - LCD Message Test

This test scrolls through all of the canned messages which could appear on the display during normal operation.

1. Enter diagnostic mode as described previously. At the **ENTER TEST 0-9** prompt, press 8 and ENTER.

2. Press ENTER to stop the test. The **ENTER TEST 0-9** prompt reappears.

   To exit from diagnostic mode, turn off the diagnostic switch at any point.

Test 9 - Mag Data Section Test (Card Systems) or Encoding Option (FleetKey Systems)

Mag Data Section Test (Mag Card Systems)

This test verifies that the mag read data section of the MPU board is functioning properly. It requires the use of the mag reader test cable from the diagnostic kit. This test is available only with mag card systems. If you have a cardless system or an optical card system and try to run this test, the LCD displays **TEST NOT AVAILABLE**.

1. Enter diagnostic mode as described previously.

2. Turn off the system power.

3. Remove the mag reader cable from the J5 connector on the MPU board. Install the mag reader test cable between the J1 and J5 connectors of the MPU PCB being sure that the connector with the gray loop wire is on the J5 connector.

   *NOTE: If you install the cable incorrectly, the system displays a **READ FAILED** message even though there may be no problem.*

4. If your MPU board has switches (prior to Rev. K), open switches 5 through 8 on the 8-position DIP switch located next to J1.

5. Turn on the system power.

6. At the **ENTER TEST 0-9** prompt, press 9 and ENTER to begin the test.

   The Series 1000 sends itself card data and then compares it to received data. If the data matches, this message appears: **PASSED READ TEST**.

   If the data does not match, this message appears: **FAILED READ TEST**. Failure of the test indicates that the problem is on the MPU board and not in the mag reader.

   If the switches are set incorrectly, this message appears: **CHECK THE SWITCHES**. Correct the switches and rerun the test.

   The **ENTER TEST 0-9** prompt reappears. Remove the mag reader test cable and replace cables.

   To exit from diagnostic mode, turn off the diagnostic switch at any point.

Key Encoding (FleetKey Systems)

This diagnostic allows you to encode keys at the FleetKey keypad. This test is available only with the Encoding Option.

1. Enter diagnostic mode. On the MPU PCB, turn the diagnostic switch located in the center back of the MPU PCB upward to ON. The LCD displays: **ENTER TEST 0-9**.

2. Press 9 and ENTER. The LCD displays: **INSERT KEY**.

3. Insert the key you wish to encode and turn it (1/4 turn clockwise).

4. If the key can be read (it was previously encoded), the existing data is shown for each field. You may keep the existing data for each field or change the data on a field-by-field basis.

   If the key is blank, and it is the first key that you are encoding since entering diagnostic mode, dashes (-) are shown for each field's data. Enter the data that you wish to encode on the key.

   If the key is blank, and it is not the first key to be encoded since entering diagnostic mode, the system displays the data from the previous encoding.

The LCD display prompts you for each field on the key with the field name followed by either dashes or data. To keep the existing data, press ENTER. To change the data, press the numbers for the new data and ENTER. If you make a mistake before pressing ENTER, press CLEAR and the data will be erased and you can start again.

Key types 1 and 2 allow field separators in certain fields. To encode field separators in a field, press CLEAR twice. Dashes are displayed to represent the field separators. If you change your mind, press CLEAR again and the display is erased. Press CLEAR again and you will see the dashes again. You can toggle between a clear display and the dashes with the CLEAR button. Press ENTER to go on to the next field.

If you have the Supervisor Key Option, you can encode special characters (dots) in the ID fields of key types 1, 2, or 3 to indicate that the field data will be entered at the keypad. The method for inserting these special characters varies by key type. For key type 3, press CLEAR twice. The field is filled with dots. For key types 1 and 2, press CLEAR three times to display the dots. You can alternate among the clear display and dots by repeatedly pressing the CLEAR button; key types 1 and 2 also have a field separator character. Press ENTER to go on to the next field.

When you have entered data for all fields, the LCD displays: **ENCODE? 1=YES 0=NO**

5. To encode the key, press 1 and ENTER. If you removed your key before arriving at this step, you will be prompted, **INSERT KEY**. If you have a two receptacle system, you must put the key back into the same receptacle that it was originally in. Once the key is in place, the display will show **WRITING RECEPTACLE X**, where **X** is 1 or 2 (depending on which receptacle your key is in). When the encoding is complete the display will show **ENCODING COMPLETE**, followed by **TURN KEY LEFT,REMOVE**.

   To terminate without encoding the key, press 0 and ENTER. The LCD displays **TURN KEY LEFT,REMOVE** if your key is still in the receptacle. Turn the key to the left and remove it and the **INSERT KEY** prompt reappears. If you have already removed your key, the display will show **INSERT KEY**. Insert a key to encode or press ENTER to select a different diagnostic test.

6. Turn your key to the left and remove it and the display returns to **INSERT KEY**.

7. Insert another key to encode or press ENTER to select a different diagnostic test.

   *NOTE: Do not remove your key until you see **TURN KEY LEFT,REMOVE**. If the key is removed during the actual encoding process, the LCD displays **ABORTED, KEY REMOVED** and returns to the **INSERT KEY** prompt. Be sure to re-encode this key before using it for fueling.*

Section 6

TROUBLESHOOTING

PURPOSE

This section is provided to guide you through possible system or pump/system problems that could arise. The procedures listed on the following pages cover the majority of problems which may occur. This section is broken down as follows:

Problem	Symptoms	Page
Entire system dead	Doesn't accept cards, keys, or keypad input for fueling. No terminal communication. The LCD may be blank or displaying one steady message.	6-3
Head assembly	The Series 1000 display is garbled, blank, or all blacked out blocks. The terminal communicates with no problems. The Series 1000 may or may not accept cards, keys, or keypad input.	6-5
Card reader	The Series 1000 does not respond correctly to cards. Terminal communication is fine. When idle, the system displays proper alternating message.	6-6
Key read/receptacle	The Series 1000 does not respond correctly to keys. Terminal communication is fine. When idle, the system displays proper alternating message.	6-7
Keypad	The Series 1000 does not respond correctly to keypad entries. When a key is pressed, wrong digit, or no digit is displayed.	6-8
Direct communication	Unable to communicate to the Series 1000 through the terminal. The Series 1000 accepts cards, keys, and keypad input for fueling. Data terminal completely dead. Data terminal not completely dead - no communication. Not completely dead, RS-422, 2 SHMs, no RS-422 communication. Not completely dead, RS-422, 1 SHM, no RS-422 communication.	6-9
Remote polling	Unable to communicate to the Series 1000 remotely. Series 1000 accepts cards, keys, or keypad input, allows fuelings.	6-12
Display stuck on Emergency Stop		6-13
Display stuck on Memory is Full		6-13
Display stuck on Remote Configuration	Transactions cannot be started.	
Display stuck on Site is Down		6-14
Pump/dispenser will not run when authorized		6-15
Pump/dispenser runs but doesn't dispense fuel		6-17
Pump dispenses fuel, pulses not being counted		6-21
Pump always on		6-22
Pump/Dispenser allows fueling, records incorrect quantity		6-23
Pump is disabled		6-24

(continued)

Problem	Symptoms	Page
Auxiliary port communication	Unable to communicate to the tank monitor through the Series 1000. The Series 1000 communicates with its two main communication ports and accepts card and keypad input for fueling.	6-25
Receipt printer	Series 1000 does not print any receipts and may not prompt for receipts. Receipts are printed but cutter bar does not cut receipts. Receipts are printed but don't cut completely across the paper. Paper doesn't advance while printing receipts, printing in self-test or when paper feed switch is pressed. Printing appears light. Portion of printed characters is missing. Paper low lamp is lit. Paper low lamp never lights. Paper out lamp is lit. Paper out lamp never lights. Printer can't enter self-test; can't exit self-test.	6-27

SERVICE NOTES

Before beginning any troubleshooting session, it is wise to follow these steps:

- Perform a visual inspection of the system to ensure that it is installed according to the *Installation Manual*.
- Ensure that all cables and switch settings are connected or set properly. See the *Installation Manual* and the *Start-Up Manual* for further details.
- Measure the DC power supply output voltages to ensure they are within proper operating tolerances. See **Test Power Supply** later in this section.
- Turn off system power before servicing.

The procedures in this section assume you have opened the rear door and removed the hood.

ENTIRE SYSTEM DOWN

Entire system dead. Doesn't accept cards, keys, or keypad input for fueling. No terminal communication. The LCD display may be blank or displaying one steady message.

Possible Cause	Checks	Corrective Action
No 115VAC feed to the Series 1000	Is breaker off or tripped? Is 115VAC being switched through breaker? Is 115VAC measured at the power input terminal block of the Series 1000?	Turn breaker on, if off. Replace breaker if 115VAC is not being switched. Correct wiring problems if 115VAC is not measured.
Series 1000 power switch is off	Check position of Series 1000 power switch.	Turn Series 1000 power switch on if off.
AC power 3 Amp SB fuse is blown	Use an ohmmeter to check if 3 Amp SB fuse is blown.	Replace the fuse if it is blown.
Defective Transzorb Cable Assy. if AC power 3 amp SB fuse blows repeatedly.	Disconnect Transzorb Cable Assy. from line interference filter. Use an ohmmeter to check if Transzorb Cable Assy. is shorted.	Replace the Transzorb Cable Assy. if it is shorted.
No +5VDC	Measure test points on right lower edge of MPU PCB between TP1 (orange) and TP5 (black) ground for proper +5VDC level (5.00VDC-5.10VDC). Check the +5VDC 5A picofuse in the lower right corner of the MPU PCB by measuring between TP5 (black) ground and each end of the picofuse. Remove the DC power cables directly from the power supply. Measure the power supply output connectors (J2, J3, J4) between pin 3 (ground) and pin 4 (+5VDC) for proper +5VDC level (5.10 - 5.30VDC)	Adjust the power supply until it is within the specified tolerance. Replace the picofuse if +5VDC is not measured at each end of the picofuse. Adjust the power supply until it is within specified tolerance. Replace the power supply if unable to adjust within specified tolerance.

(Continued)

Possible Cause	**Checks**	**Corrective Action**
MPU PCB jumper(s) not installed, making poor connection, or incorrect selection.	On the JP3 jumper patch, verify that correct MAPTYPE jumper positions are selected for the ROM address being used. Locate ROM address on ROM label. Verify good electrical connection.	If ROM address is 8000, 9000, or A000, install jumper(s) to select the required address (see page 2-14). If ROM address is 7000, remove all jumpers to select the 7000 address. Make good electrical connection if a faulty one exists.
Missing Auxiliary Communications PCB.	Verify that the auxiliary communication port PCB is present and properly connected.	Install PCB, if missing. Check connections and repair, if necessary.
Defective MPU PCB.	Verify that all cables are properly connected to the MPU PCB.	Replace MPU PCB assy. if all cables are correct.
Defective 32K RAM.	Verify that 32K RAM is properly installed and in correct socket (U23). *Note: The 32K RAM chip is marked DS1235Y or bq4011 YMA-150.*	Replace 32K RAM if it was properly installed in socket U23 with no bent pins.
Defective Auxiliary Communications Port PCB.	If your system has the tank monitor interface option, or the receipt printer option, verify that the auxiliary communication port PCB is correctly and securely connected to the MPU PCB.	Make good electrical connection if faulty one exists. Replace the Auxiliary Communications Port PCB if a good connection exists but the problem has not been corrected.
Defective 8K RAM (FleetKey or software versions 8.1 or greater).	Verify 8K RAM is properly installed and in correct socket (U22). *Note: The 8K RAM chip is marked DS1225Y or bq4010 YMA-150.*	Replace 8K RAM if it was properly installed in socket U22 with no bent pins.
Defective ROM.	Verify ROM is properly installed and in correct socket (U21).	Replace ROM if it was properly installed in U21 socket with no bent pins.

HEAD ASSEMBLY PROBLEMS

Series 1000 display is garbled, blank, or all blacked out blocks. The terminal communicates with no problems. May or may not accept cards, keys, or keypad input.

If Deadman Timer LED On MPU PCB is Not Lit:

Possible Cause	Checks	Corrective Action
One message garbled: Display message not loaded.	Print **PS** command and examine idle message.	Use **SC** command to load valid idle message.
No jumper or poor connection on JP1 jumper patch.	Verify that a jumper is installed on JP1 between top pin (A) and center pin. Verify good electrical connection.	Install jumper if not present (See page 2-14). Make good electrical connection if faulty one exists.
Improper viewing angle adjustment.	Densitron display: Adjust R6 (next to JP1 on the MPU PCB). Okaya display: adjust RX pot.	Adjust viewing angle until an acceptable display appears.
Defective LCD display or defective MPU PCB.	Verify good connection between LCD and MPU PCB.	Replace LCD. Replace MPU PCB if replacing LCD did not correct the problem.

If Deadman Timer LED on MPU PCB is Lit:

Possible Cause	Checks	Corrective Action
MPU PCB does not acknowledge clock signal.	Using a DC voltmeter, measure between the DC ground and pin 3 of U19 on the MPU PCB.	Replace MPU PCB if 2.5 - 3.5 VDC is measured.
No jumper or poor connection on JP5 of 1st PC PCB.	Verify that a jumper is installed on JP5 of 1st PC PCB. Verify good electrical connection.	Install jumper if not present. (See page 2-19). Make good electrical connection if faulty connection exists.
PC PCB is not generating a clock signal.	Using an AC voltmeter, measure between the gray and brown wires of the J3 connector on the 1st PC PCB.	Replace the PC PCB if 115 VAC is measured. Repair the system cabling if 115VAC is not measured.

CARD READER PROBLEM

Series 1000 does not respond correctly to cards. Terminal communication is fine. When idle, system displays proper alternating message.

Optical

Possible Cause	Checks	Corrective Action
Bad card.	Run several cards to see if problem is consistent.	Replace card if problem follows card.
Burnt out bulbs in optical reader.	Remove the hood of the optical reader and examine all 6 bulbs.	If bulbs are burnt out, replace all six bulbs or the entire lamp housing.
Dirty or broken glass in optical reader.	Remove the hood of the optical reader and examine the condition of the glass on the base of the reader.	Clean the glass if it is dirty. Replace the glass if it is cracked or broken.
Defective optical reader or defective MPU PCB.		Replace optical reader. Replace MPU PCB if replacing optical reader did not correct the problem.

Mag

Possible Cause	Checks	Corrective Action
Bad card.	Run several cards to see if problem is consistent.	Replace card if problem follows card.
Defective mag reader or MPU PCB.	Perform diagnostic test 9 with special test cable. Check if test passes or fails.	Replace mag card reader if test passes. Replace MPU PCB if test fails.

KEY READ/RECEPTACLE PROBLEM

Series 1000 does not respond correctly to keys. Terminal communication is fine. When idle, system displays proper alternating message.

Possible Cause	Checks	Corrective Action
Bad key	Run several keys to see if problem is consistent. Perform Preventive Maintenance below.	Replace key if problem follows key. If possible, re-encode key and retry.
Defective Key I/F PCB Defective MPU PCB Defective key receptacle	The DC signals between the Key I/F PCB, MPU PCB, and key receptacle occur quickly and are best viewed with an oscilloscope. To eliminate lengthy oscilloscope procedures, just follow the corrective action.	Replace the Key I/F PCB and retest. Replace the MPU PCB and retest. Replace the Key receptacle and retest.

Preventive Maintenance

To prevent key read errors, perform the following preventive maintenance on the keys as needed: clean the key's contacts using isopropyl alcohol and a toothbrush. Dip the toothbrush in the alcohol and brush the contacts of the key until they are clean.

KEYPAD PROBLEM

Series 1000 does not respond correctly to keypad entries. When key is pressed, wrong digit or no digit is displayed.

Possible Cause	Checks	Corrective Action
Defective keypad or MPU PCB.	Verify that all pumps are idle and turn off the power to the Series 1000. Unplug the rear connector from PC PCB for pump number one. Plug simulator connector into vacated position on PC PCB. Unplug keypad connector J8 on MPU PCB. Plug keypad cable into keypad connector (P1) of simulator. Turn on AC power switch in Series 1000. Press any button on keypad. Both LED's for each number should light on the keypad tester. If they don't, the keypad has failed the test.	Replace the keypad if it fails the keypad test.
	If both LED's light for one number, test each number on the keypad. If the LED's light for each number, the keypad is OK and the problem is the MPU PCB.	Replace the MPU PCB if the keypad passes the keypad test. See **Replacing an MPU PCB**.

DIRECT COMMUNICATION PROBLEM

Unable to communicate to the Series 1000 through the terminal. The Series 1000 accepts cards, keys, or keypad input and allows fueling.

Data Terminal Completely Dead

Possible Cause	Checks	Corrective Action
Data terminal power switch is off.	Check position of data terminal power switch.	Turn switch on, if off.
No 115VAC feed to data terminal.	Is breaker off or tripped? Is 115 VAC being switched through breaker? Is 115VAC measured at the data terminal AC outlet?	Turn breaker on, if off. Replace breaker is 115VAC is not being switched. Correct wiring problems if 115VAC is not measured.
Defective data terminal.	If terminal is a CRT is screen blank? If terminal is a hard copy printer, does paper advance work? Place data terminal in offline mode. Type random letters on keyboard.	Replace data terminal if screen is blank (CRT) or paper advance does not feed paper. Replace data terminal if typed characters do not print or display on data terminal.

Data Terminal Not Completely Dead - No Communication (RS-232 or RS-422)

Possible Cause	Checks	Corrective Action
Data terminal not in online mode.	Check switch or configuration to verify data terminal is in online mode.	Place data terminal in online mode, if in offline mode.
Data terminal baud rate incorrect.	Check switches or configuration to verify data terminal is set to desired baud rate.	Set data terminal to desired baud rate, if incorrect.
Other data terminal parameters incorrect.	Check switches or configuration to verify the settings of number of data bits, stop bits, parity and any other pertinent options.	Correct all incorrect selections.
Baud rate incorrect at Series 1000.	Check jumper selections of port 1 and port 2 to verify that they are set to desired baud rate.	Change port(s) to desired baud rate, if incorrect.

(Continued)

Possible Cause	Checks	Corrective Action
Series 1000 port communication cables plugged into the wrong connector.	Check the Series 1000 port communication cables to verify that they are attached to the desired connectors. (Upper connector for RS-232; lower for RS-422 communications.)	Attach the communication cables to the appropriate communication connectors, if incorrect.
No -12VDC.	Using a DC voltmeter, measure between the -12 and ground test points on the MPU PCB. Is -11.7 to -12.8 measured?	Try to adjust the +5VDC of the supply to +5.05 VDC. Replace the power supply if proper -12VDC level cannot be reached.
Defective MPU PCB communication section.	Remove port communication cable from MPU PCB and connect RS-422 loopback jumper to vacated port connector. Perform diagnostic test 5, selecting port to be tested.	If diagnostic test 5 passes, remove RS-422 loopback jumper and reconnect port communication cable to MPU PCB. If diagnostic test 5 fails, replace MPU PCB.
If RS-232, defective communication wiring or data terminal.	Remove communication cable from data terminal. Connect RS-232 loopback jumper to communication cable. Perform diagnostic test 5, selecting port to be tested.	Repair communication wiring if diagnostic test 5 fails. Replace data terminal if diagnostic test 5 passes.

Not Completely Dead, RS-422, 2 SHM'S, No RS-422 Communication

Possible Cause	Checks	Corrective Action
Defective data terminal.	Remove communication cable from data terminal. Connect RS-232 loopback jumper to communication cable. Perform diagnostic test 5, selecting port to be tested.	Replace data terminal if diagnostic test 5 passes.
Defective data terminal communication cable.	Locate the SHM connected to the data terminal. Place the SHM into loopback mode. Perform diagnostic test 5, selecting port to be tested.	Replace or repair the data terminal communications cable if diagnostic test 5 passes.
Defective SHM.	Locate the SHM in the Series 1000 post. Place the SHM into loopback mode. Perform diagnostic test 5, selecting the port to be tested.	Replace the SHM in the Series 1000 post if diagnostic test 5 fails. Replace the SHM at the data terminal end or repair the wiring between the two SHMs if diagnostic test 5 passes.

Not Completely Dead, RS-422, 1 SHM, No RS-422 Communication

Possible Cause	Checks	Corrective Action
Defective data terminal.	Remove communication cable from data terminal. Connect RS-232 loopback jumper to communication cable. Perform diagnostic test 5, selecting port to be tested.	Replace data terminal if diagnostic test 5 passes.
Defective SHM or wiring.	Remove field wiring from SHM. Place SHM in loopback test position. (If there is no test switch, jumper TB positions 1 & 3 and 2 & 4). Press several keys on data terminal to see if they will print.	Replace SHM or data terminal communication cable if selected keys do not print. Repair wiring between Series 1000 and SHM if selected keys print.

REMOTE POLLING PROBLEMS

Unable to communicate to the Series 1000 remotely. Series 1000 accepts cards, keys, or keypad input, allows fuelings.

Possible Cause	Checks	Corrective Action
Incorrect baud rate at originate polling station.	Examine the switch settings or configurations of the originate modem and data terminal to verify they are set to desired baud rate.	Select the desired baud rate for the modem and data terminal if it was incorrect.
Failures within the originate polling station	If the customer has more than one site, try polling a different site or have GASBOY technical service try polling the site. If you can't communicate to another site or GASBOY can communicate to it, there is a problem at the originate polling station.	Due to varying configurations of originate polling stations, troubleshooting procedures would be very lengthy. Check and correct if necessary: phone line, modem, modem settings, data terminal, PC, interconnections, and software.
Poor phone line connection at Series 1000.	Locate the phone jack in the Series 1000 post and head. Check the phone line plug connection to the jack. Check the plug connection to the jack of the modem.	Make correct and good connection if it was incorrect.
Defective phone line	Unplug the modem from the phone jack. Plug a working phone into the jack. Is there a dial tone? Have someone dial the phone number. Does the phone ring? Can you talk to the party on the other end? Is the line clean and noise free?	If you answered no to any of the questions, call the telephone company to repair the line.
Incorrect or poor baud rate connection on port 2 at Series 1000	Verify the desired baud rate is selected and it is a good electrical connection.	Make correct and good baud rate connection at port 2, if it was incorrect.
Defective MPU PCB or built in modem.	Remove modem ribbon cable from MPU PCB and connect RS-422 loopback jumper to port 2 RS-422 connector. Perform diagnostic test 5, selecting port 2.	Replace MPU PCB if diagnostic test 5 fails. Replace the built-in modem if diagnostic test 5 passes.

DISPLAY STUCK ON EMERGENCY STOP

Possible Cause	Checks	Corrective Action
Disable Pumps button is pressed in.	Does button appear to be pressed in?	Regardless of button position, push button firmly in and pull button firmly out.
Disable Pumps switch is shorted or MPU PCB is defective.	Remove the Disable Pumps Switch connector (J7) from the MPU PCB. Is **EMERGENCY STOP** still displayed?	Replace the Disable Pumps switch if the message is not displayed. Replace the MPU PCB if the message is still displayed.

DISPLAY STUCK ON MEMORY IS FULL

Possible Cause	Checks	Corrective Action
Transaction Memory may actually be full.	Enter **PD** command on data terminal. Examine transaction pointers and, if they are reasonable, calculate the number of transactions in the memory. Could the memory actually be full?	If the memory is full, poll all transactions and using the **RP** command, move the transaction pointer ahead.
Defective RAM chip	Place the Series 1000 in diagnostic mode. Run diagnostic test 6. Does RAM test fail?	If RAM test fails, poll or print all transactions and any other important information and replace the RAM chip.* Reload all system data. If RAM test passes, poll or print all transactions and any other important information. Using the **RT** and **LN** commands, reset the transaction file. Verify all other system data and reload any incorrect data *NOTE: If the memory was recently reset for a similar problem, contact GASBOY Technical Service.*

* *Replacing a RAM removes all system information, requiring it to be reloaded. Printing and/or polling all your transactions and system information will ensure that you enter the correct information when you reload your system.*

If you have software version 8.1 or higher or a FleetKey system, it contains two RAM chips, an 8K and a 32K. Replace the 32K RAM chip located in socket U23. Run diagnostic test 6. If it fails again, replace the 8K RAM located in socket U22. Reload all system data.

DISPLAY STUCK ON REMOTE CONFIGURATION

Possible Cause	Checks	Corrective Action
Pulse rate switch on CPU PCB is in enabled position. Transactions blocked.	Check position of switch SW2. Check to see if pulse rate is being changed.	Set switch to disabled. If pulse rate is being changed, return SW2 to disabled whem change is complete.

DISPLAY STUCK ON SITE IS DOWN

Possible Cause	Checks	Corrective Action
Site down option was accidentally enabled.	Print the **PS** command on the data terminal to verify the status of the Site Down option.	Use the **SC** command to disable the site down option if it was not supposed to be enabled.
Site down option is functioning properly but recorded times are incorrect.	Print the **PD** command on the data terminal to verify the recorded site down and site up times as well as the system time. Are the times correct?	If you are within the time zone and the times are correct, and the system time is correct, take no action. If you are within the time zone but the times are incorrect, use the **SD** command to load the correct down and up times. If the system time is incorrect, use the **LD** command to load the current time.
Defective RAM.	Print the **PD** command on the data terminal to verify the recorded site down and site up times. Are the times correct and are you within time zone?	If the times are incorrect or scrambled, use the **SD** command to reload the times. Examine them with the **PD** command. If they are still incorrect or scrambled, poll transactions and any other important information and replace RAM*. Reload all system data. If times are correct but you are outside of the time zone, poll transactions and other important information and replace RAM*. Reload all other system data.

* *Replacing a RAM removes all system information, requiring it to be reloaded. Printing and/or polling all your transactions and system information will ensure that you enter the correct information when you reload your system.*

*If your software is version 1 or 2, before replacing RAM, enter the **SD** command through the data terminal and answer **N** to **IS SHUTDOWN IN EFFECT NOW?** If this corrects the problem, do not replace the RAM. If this does not correct the problem, replace RAM.*

If you have software version 8.1 or higher or a FleetKey system, it contains two RAM chips, an 8K (U22) and a 32K (U23). Replace both of them.

PUMP/DISPENSER WILL NOT RESET OR RUN WHEN AUTHORIZED

MANUAL: Inside the Series 1000 post, turn the pump override switch to the MANUAL position. Turn the pump handle on. If the pump/dispenser resets and runs, go to AUTOMATIC.

Possible Cause	Checks	Corrective Action
No AC feed to the pump/dispenser.	Is the breaker off or tripped? Is 115 (230) VAC being switched through breaker? Is 115VAC measured at the input side of the pump power terminal block?	Turn breaker on, if off. Replace breaker if 115 (230) VAC is not being switched. Repair wiring problem from electric panel to Series 1000 if no input measured.
Defective pump override switch.	Is 115 VAC measured at the output side of the pump power terminal block?	Replace the pump override switch (or entire relay module) if no output is measured.
Defective electric reset	Open AC junction box in pump/dispenser. Is 115VAC measured at input to reset motor?	If 115VAC is measured, replace or repair reset. If 115VAC is not measured at reset input, but is measured at output side of relay module terminal block, repair wiring from Series 1000 to reset.

AUTOMATIC: Inside the Series 1000 post, turn the pump override switch to the AUTO position.

Possible Cause	Checks	Corrective Action
PC PCB or MPU PCB is not sending the signal to turn relay on, or PC to MPU ribbon cable assy. is not properly transferring signals between PC and MPU PCB's.	Turn the pump override switch to AUTO. Authorize the pump. Does the relay LED on the PC PCB light?	Replace the PC PCB if relay LED doesn't light. Replace the MPU PCB if replacing the PC PCB didn't cause the relay LED to light. Replace the PC to MPU ribbon cable assembly if replacing the PCB's did not cause the relay LED to light.
Blown 12VDC fuse	Remove the 12VDC fuse and measure it with an ohmmeter.	Replace the 12VDC fuse if it is blown.

(Continued)

Automatic (Continued)

Possible Cause	Checks	Corrective Action
Disable Pumps switch is not passing 12VDC through to relays.	Press the button fully in. Pull the button fully out. Recheck the pump. With a DC voltmeter, measure between each red wire of the switch to DC ground. Is +11.8 - 13.2 VDC measured on each wire?	If pump works, Disable Pumps switch is OK. Replace the Disable Pumps switch if 11.8-13.2VDC is not measured on each wire.
Defective PC PCB or defective relay.	Connect the pump simulator to appropriate PC PCB position. Authorize the pump. Does the relay LED on the pump simulator light?	Replace the PC PCB if the pump simulator relay LED does not light. Replace the relay if the pump simulator relay LED does light. *NOTE: If the hose outlet is a pump, replace the relay for the A contacts of the relay module. If the hose outlet is a dispenser, replace the relay for the B contacts of the relay module.* *

* *This corrective action assumes that the relays are installed as indicated in the Installation manual.*

PUMP/DISPENSER RESETS BUT DOESN'T DISPENSE FUEL

Pump - Place in Manual to eliminate system. Inside the Series 1000 post, place the pump override switch in the MANUAL position.

Possible Cause	Checks	Corrective Action
Out of fuel	Stick the tank to verify the level of fuel.	Order fuel if the tank is empty.
Defective electric reset.	Using an AC voltmeter, after reset is complete, is 115 (230) VAC measured at the pump motor?	Repair or replace the electric reset if 115 (230) VAC is not measured at the pump motor.
Defective pump motor.	Does the pump motor turn when voltage is applied?	Replace the pump motor if it does not turn.
No AC power to solenoid valve (if applicable).	Using an AC voltmeter, measure across the solenoid after reset is complete. Is 115VAC measured?	Repair or replace the electric reset if 115 VAC is not measured at solenoid.
Defective solenoid valve (if applicable).	Check if solenoid valve clicks open when 115VAC is applied.	Replace the solenoid valve if it does not click open when 115VAC is applied.
Pump lost prime, poor siphon action, defective pumping unit.		Call a qualified pump service technician.

Dispenser - Place in MANUAL to eliminate system. In the Series 1000 post, place the pump override switch in the MANUAL position.

Possible Cause	Checks	Corrective Action
Out of fuel.	Stick the tank to verify level of fuel.	Order fuel if tank is empty.
Leak detector did not open.	Leak in supply line or piping.	Replace defective leak detector if it does not open. Call qualified service personnel.
Shear valve tripped.	Is valve tripped? Check for what caused it to trip (loose mounting to island, cabinet had been hit, etc.)	Reset, or if necessary, replace shear valve if it is tripped. Correct cause of tripping.
No AC power to solenoid valve.	Using an AC voltmeter, measure across the solenoid after reset is complete. Is 115VAC measured?	Repair or replace the electric reset if 115 VAC is not measured at solenoid.
Defective solenoid valve.	Check if solenoid valve clicks open when 115VAC is applied.	Replace the solenoid valve if it does not click open when 115VAC is applied.
No AC power to starter relay (if applicable).	Using an AC voltmeter, measure between neutral and the output of the A contacts of the pump power terminal block. Is 115VAC measured? Using an AC voltmeter, in the AC junction box, measure the electric reset submersible drive output. Is 115VAC measured? Using an AC voltmeter, measure across the starter relay coil. Is 115VAC measured?	Replace the pump override switch if 115VAC is not measured at the output of the pump power terminal block, but is measured at the input. Repair or replace the electric reset if 115VAC is not measured at the submersible drive output. Repair wiring from electric reset to starter relay if 115VAC is not measured across relay coil.
Defective starter relay (if applicable).	Does starter relay close when 115 VAC is applied?	Replace starter relay if it does not close when 115VAC is applied.

(Continued)

Possible Cause	Checks	Corrective Action
No AC power switched through starter relay (if applicable).	Using an AC voltmeter, measure the output contacts of the starter relay. Is 115 (230) VAC measured?	Replace the starter relay if 115 (230) VAC is not measured at the output contacts of the starter relay but is measured at the input contacts.
	Is the breaker which supplies power to the submersible pump through the starter relay off or tripped?	Turn breaker on, if off.
	Is 115 (230) VAC being switched through the submersible power feed breaker?	Replace breaker if 115 (230) VAC is not being switched.
	Is 115 (230) VAC measured at the input contacts of the starter relay?	Repair wiring problems if 115 (230) VAC is not measured at starter relay input contacts.
No AC power to submersible motor.	If no starter relay, use an AC voltmeter to measure between neutral and the output of the A contacts of the pump power terminal block in the Series 1000 post. Is 115 VAC measured?	Replace the pump override switch if 115 VAC is not measured at the output of the pump power terminal block, but is measured at the input.
	If no starter relay, use an AC voltmeter to measure the electric reset submersible drive in the AC junction box. Is 115VAC measured?	Repair or replace the electric reset if 115VAC is not measured at the submersible drive output.
	Using an AC voltmeter, measure the input to the submersible motor. Is 115 (230) VAC measured?	If no starter relay and 115 (230) VAC is not measured, repair wiring from electric reset to submersible motor. If using a starter relay and 115 (230) VAC is not measured, repair wiring from starter relay to submersible motor.
Defective submersible motor.		Call qualified service personnel.

Place pump/dispenser in auto position. Inside the Series 1000 post, place the pump override switch in the AUTO position.

Possible Cause	Checks	Corrective Action
No AC feed through Series 1000.	Authorize the pump. Using an AC voltmeter, measure between the neutral and the output of the A contacts of the pump power terminal block in the Series 1000 post. Is 115VAC measured?	Replace the relay for the A contacts if 115VAC is not measured at the output. Replace the pump override switch if replacing the relay did not correct the problem.

PUMP DISPENSES FUEL, PULSES NOT BEING COUNTED

Possible Cause	Checks	Corrective Action
No switch detect (reset complete) signal from the pump.	Does switch detect LED on PC PCB light? Using an AC voltmeter, measure across the switch detect terminal block in the Series 1000 post. Is 115VAC measured when reset is complete?	Switch detect is OK if PC PCB LED lights. Repair or replace electric reset motor or repair wiring between electric reset motor and Series 1000 if 115VAC is not measured.
Switch detect signal not acknowledged by PC PCB.	Connect pump simulator to suspect pump position on PC PCB. Turn on switch detect switch of simulator. Does switch detect LED on PC PCB light?	Replace PC PCB if switch detect LED does not light. Repair cabling or examine connection of cabling between switch detect terminal block in Series 1000 post and PC PCB.
Pulse signals not acknowledged by PC PCB or MPU PCB.	Examine pulse LED on PC PCB while dispensing fuel slowly. Does pulse LED blink with each pulse? Connect pump simulator to suspect pump position on PC PCB. Press the pulse button repeatedly. Does the pulse LED on the PC PCB blink with each press of the pulse button?	Replace PC PCB if the pulse LED is blinking with each pulse but not recording quantity. Replace the MPU PCB if pulse LED is blinking with each pulse and changing PC PCB did not correct problem. Replace the PC PCB if the pulse LED does not blink with each press of the pulse button.
No pulse signals from the pump.	Examine the pulser while dispensing fuel. Is the pulser shaft turning?	Repair the pulser linkage (cotter pin) if the pulser shaft does not turn.
No pulse signals from the pump.	Disconnect the pulser at the DC junction box. Authorize the pump and do a tap test. In reed pulser wiring, simply tap the two wires together. In electronic pulser wiring, tap the DC ground wire and pulse wire together. Check if pulses are recorded.	Repair the pulser wiring if pulses are not recorded. Check for shorts or opens. Replace the pulser if pulses are recorded.

PUMP ALWAYS ON

Possible Cause	Checks	Corrective Action
Pump override switch is in MANUAL position.	Locate the proper pump override switch in the Series 1000 post and check if it is in the MANUAL (down) position.	Place the pump override switch in the AUTO position (all the way up), if it is not in AUTO.
The pump is being held on by the PC PCB or MPU PCB	Check if the relay LED on the PC PCB is lit.	Replace the PC PCB if the relay LED is lit. Replace the MPU PCB if the relay LED is lit and replacing the PC PCB did not correct the problem.
Possible short providing pump power.	Turn off all breakers. Using an ohmmeter, measure across the A contacts, then the B contacts of the pump power terminal block in the Series 1000 post. If a short is measured for either of the contacts, remove the field wiring from the pump power terminal block and measure each set of contacts again. Is short measured again?	Replace the pump override switch if a short is measured on either set of contacts. Repair the pump wiring if no short is measured after the field wiring is removed from the pump power terminal block.
Power to pump is being allowed by the PC PCB or relays.		Replace the PC PCB if the pump is always on. Replace the relays if the pump is always on and replacing the PC PCB did not correct the problem.

PUMP/DISPENSER ALLOWS FUELING; RECORDS INCORRECT QUANTITY

Possible Cause	Checks	Corrective Action
PC PCB JP1, JP2, JP3 jumpers making poor connection or incorrectly configured.	Examine the selected jumper configuration. Is it correct? (See page 2-19). Verify good electrical connection.	Reconfigure all incorrect jumper selections so they are correct for this application. Make good electrical connections if faulty connections exist.
Incorrect pulse rate recorded for the pump.	Print the **XP** command and examine the pulse rate assigned to the pump. Is it correct?	Use the **SC** command to change the assigned pump pulse rate if it is presently incorrect. If you do not get a pulse rate prompt during the **SC** command, you may need to verify that the pulse rate switch on the MPU board is set correctly (see page 2-15). This should have been done at start-up.
Pulses are being miscounted by the PC PCB.	Connect pump simulator to the suspect position of PC PCB. Authorize pump. Turn on switch detect switch. Push pulse button 50 times. Turn off switch detect switch. Did 50 pulses record?	Repeat the test several times to be sure of the results. Replace the PC PCB if 50 pulses are not recorded.
Pulser shaft is slipping.	Examine the pulser shaft while dispensing fuel. Does it slip or turn inconsistently?	Repair the pulser connection if a problem exists.
The pulser wires have been run with AC wires.	Examine the wiring to verify the pulser wires do not share conduits, junction boxes, or wiring troughs with AC wires.	Separate AC wires from pulser wires wherever they are currently combined.
Electrical noise on pulser or switch detect wiring.	Using an oscilloscope, check pulser and switch detect wiring for excessive electrical noise.	Locate and eliminate the source of electrical noise. Call GASBOY Technical service if further assistance is required.
Defective pulser.		Replace pulser if incorrect quantities are still being recorded.

PUMP IS DISABLED

Possible Cause	Checks	Corrective Action
The terminal operator manually disabled the pump.	Did someone disable the pump through the terminal using the **DP** command?	Find out why and correct problem if necessary.
A fueling problem caused the Series 1000 to automatically disable the pump after a specified number of consecutive no quantity transactions.	Examine the data terminal printouts. Use the **EP** command to enable the pump. Authorize the pump. Does the pump reset? Does the pump dispense fuel? Turn pump handle off. Is quantity recorded in this transaction?	 If it does not reset, follow the procedure outlined in **Pump/Dispenser Will Not Reset or Run When Authorized**. If it does not dispense fuel, follow the procedure outlined in **Pump/Dispenser Resets But Doesn't Dispense Fuel**. If quantity is not recorded, follow the procedure outlined in **Pump Dispenses Fuel, Pulses Not Being Counted**.
Pump timeouts are too short.	Enter the **XP** command on the data terminal to examine the assigned pump timeouts.	Use the **LP** command to reload the pump timeouts if they are too short.
Number of consecutive no quantity transactions is set too low	Enter the **PS** command on the data terminal to examine the assigned number of consecutive no quantity transactions before disabling the pump.	Use the **SC** command to reload the number of consecutive no quantity transactions if it is set too low.

AUXILIARY PORT COMMUNICATION PROBLEM

Unable to communicate to the tank monitor through the Series 1000. The Series 1000 communicates with its two main communication ports and accepts cards, keys, or keypad input for fueling.

Possible Cause	Checks	Corrective Action
No AC power to tank monitor.	Is tank monitor AC power switch off? Is tank monitor breaker off? Is 115VAC measured out of breaker? Is 115VAC measured at power input terminal block of tank monitor?	Turn on, if off Turn breaker on, if off. Replace breaker if 115VAC is not measured. Repair wiring if 115VAC is not measured.
Communication unplugged or bad connection at tank monitor.	Verify good connection of communication cable to tank monitor.	Make good connection if poor connection exists.
Incorrect baud rates.	Verify that the baud rate of the tank monitor is equal to the port 1 baud rate selected on the Auxiliary Communication Port PCB. Verify that the MPU PCB communication port (1 or 2) and its data terminal being used to access the tank monitor have a baud rate equal or greater than the one selected in the tank monitor and Auxiliary Communication Port PCB.	Make the appropriate change if the baud rates are not equal. *NOTE: The tank monitor baud rate should not exceed 1200 baud.* Make the appropriate baud rate changes on the selected equipment if the polling port baud rate is not equal or greater to the tank monitor baud rate.
Auxiliary Communication Port PCB communication cable plugged into the wrong communication connector.	Locate port 1 on the Auxiliary Communication Port PCB and determine the connector to which the communication cable is attached. The upper connector is RS-422; the lower connector is RS-232.	Verify that the communication cable is connected to the appropriate communication connector.

(Continued)

Possible Cause	Checks	Corrective Action
Defective Auxiliary Communications Port PCB or MPU PCB.	Connect the RS-422 loopback jumper to the appropriate connector (RS-422 or RS-232) of the Auxiliary Communication Port PCB. Use the **TM** command to access the tank monitor. Begin typing characters on the data terminal. With the exception of the first character typed, all characters typed should display on the data terminal.	If you are unable to enter the tank monitor mode or the typed characters do not display on the data terminal, replace the Auxiliary Communication Port PCB. Replace the MPU PCB if replacing the Auxiliary Communication Port PCB did not allow the loopback test to work.
No power to short haul modem (SHM) (if RS-422 communication is used).	Using AC voltmeter, measure AC outlet which powers SHM transformer. Is 115VAC measured? Remove cover to SHM and measure DC voltages. Pin 1: ground, Pin 2: +5VDC, Pin 3: +12VDC, Pin 4: -12VDC.	Turn on breaker, if off. Replace breaker if 115VAC is not switched through it. Repair wiring or receptacle if 115VAC is not measured. Replace SHM transformer if any DC voltages are missing.
Defective cabling or short haul modem (if RS-422) or tank monitor.	Disconnect the communication cable from the tank monitor and connect it to the RS-232 loopback connector. (See Note 1) Using the **TM** command on the data terminal, access the tank monitor. Begin typing characters on the data terminal. With the exception of the first character, all characters typed should appear on the data terminal.	If RS-232 communication and loopback test fails, repair cabling. If RS-422 communication and loopback test fails, use an ohmmeter to check cabling from Series 1000 post to short haul modem. Repair cabling if shorts or opens are measured. Replace short haul modem if cabling is good. If loopback test passes, repair tank monitor. See Note 2.

NOTE 1: For RS-232 communication only: when performing a loopback test, attach a jumper wire between positions 2 & 4 of the auxiliary port terminal block in the Series 1000 post.)

NOTE 2: If RS-232 communication, before repairing tank monitor, use an ohmmeter to verify wire from auxiliary port terminal block position 4 to position 20 of the RS-232D connector is good. This line is not tested with the loopback test. Repair the line if it is open or shorted to any other lines.

RECEIPT PRINTER PROBLEMS

Series 1000 does not print any receipts and may not prompt for receipts.

Possible Cause	Checks	Corrective Action
The Printer Status PCB power switch is off.	Verify that the Printer Status PCB power switch is on.	Turn switch on, if off.
The receipt printer is not in online mode	Check the online LED on the Printer Status PCB to see if it is lit.	Press the online button on the Printer Status PCB to place the printer online.
Poor connection or wrong baud rate selection.	Examine the baud rate jumper for port 2 on the Auxiliary Communications Port PCB. Verify correct rate (9600) and good electrical connection.	Choose correct rate (9600) and make good electrical connection.
Problem in RS-232 communication between Series 1000 and receipt printer.	Turn off the power switch on the Printer Status PCB. While holding the paper feed switch in, turn the power switch on. This will generate an internal self-test and the printer should begin printing.	If the printer performs the internal self-test, replace the Auxiliary Communications Port PCB. Replace the Star Controller PCB if replacing the Auxiliary Communications Port PCB did not correct the problem. If the printer did not perform the internal self-test, replace the Star Controller PCB. Replace the Star Printer mechanism, if replacing the Star Controller PCB did not correct the problem.

Receipts are printed but cutter bar does not cut receipts.

Possible Cause	Checks	Corrective Action
No drive signal from Star Controller PCB or defective cutter mechanism.	Using a DC voltmeter, measure between CN3, pin 2 (drive signal) and CN3, pin 3 (ground) of the Star Controller PCB. A 12VDC level should be measured until the cutter bar is to be activated. The level drops to 0VDC and returns to +12VDC.	Replace the Star Controller PCB if no change in voltage level is measured. Replace the printer mechanism if the voltage level changes but the cutter is not activated.

Receipts are printed but aren't cut completely across the paper.

Possible Cause	Checks	Corrective Action
Loose cutter bar adjustment screw or improperly adjusted cutter bar blades.	Turn on the self-test switch on the Printer Status PCB to initiate self-test printing. Turn off the switch to terminate printing and activate the cutter bar. Do this repeatedly to check on the cutter bar adjustment.	Adjust the cutter blades by turning the cutter bar adjustment screw. See the **Receipt Printer Maintenance** section in the Operation Manual for detailed information.
Defective cutter bar assembly.		Replace the printer mechanism if the cutter bar cannot be adjusted to cut properly.

Paper doesn't advance when printing receipts, printing in self-test, or when paper feed switch is pressed.

Possible Cause	Checks	Corrective Action
Defective paper feed switch on the printer status PCB	Using a DC voltmeter, measure between pins 2 (paper feed) and 6 (ground) on the P4 connector of the Printer Status PCB. +5VDC should be measured until the paper feed switch is pressed causing 0VDC to be measured.	Replace the Printer Status PCB if 0VDC is not measured when the paper feed switch is pressed.
Defective Star Controller PCB or printer mechanism (clutch mechanism or clutch solenoid).	Using an oscilloscope, measure pin 3 of the CN2 connector on the Star Controller PCB. While pressing the paper feed switch, a 12VDC square wave should be measured. If using a DC voltmeter, voltage should measure between 4 and 6VDC.	Replace the Star Controller PCB if a +12VDC square wave is not measured at CN2 pin 3. Replace the printer mechanism if a +12 VDC square wave is measured at CN2 pin 3 and the paper doesn't advance.

Printing appears light.

Possible Cause	Checks	Corrective Action
Worn out or dry ink ribbon.	Examine ribbon for wear or dryness.	Replace ribbon.
Improper head clearance on printer mechanism.		Replace printer mechanism.
Insufficient print solenoid drive current.		Replace Star Controller PCB if replacing printer mechanism didn't correct problem.

Portion of printed characters is missing.

Possible Cause	Checks	Corrective Action
Ink ribbon is not installed properly, is worn out or dry.	Examine the installation of the ribbon. If it is correct, examine the ribbon for wear, dryness, tears, or holes.	Re-install the ribbon or replace it if necessary.
Printer mechanism may have a defective print head, improper head clearance, or may be running at improper print speed.		Replace the printer mechanism.
Defective print head solenoid drivers.		Replace the Star Controller PCB if replacing the printer mechanism didn't correct the problem.

Paper low lamp is lit.

Possible Cause	Checks	Corrective Action
Receipt printer is actually low on paper.	Check the amount of remaining paper.	Replace the paper if it is low.
Defective paper low sense switch.	Check if switch roller arm is bent or broken. Using a DC voltmeter, measure across the wires to the switch. With switch pressed, +12VDC should be measured; with switch open, 0VDC should be measured.	Replace switch if it is mechanically or electrically defective. *NOTE: Once the paper low lamp comes on, it will not go off unless paper out is reached and then refilled, or the MPU PCB is reset.*
Incorrect switch selection on the MPU PCB.	Switch positions 5 through 8 of the MPU PCB dip switch should be open.	Open switch positions 5 through 8 if they are closed. Press the reset switch on the MPU PCB after changing switch positions.
Defective switch sense IC or lamp driver on the Auxiliary Communications Port PCB.	Using a DC voltmeter, measure pin 4 of U11 on the Auxiliary Communications Port PCB. +5VDC should be measured if paper is not low.	Replace the Auxiliary Communications Port PCB if 0VDC is measured at U11 pin 4 and paper is not actually low.
Defective MPU PCB.		Replace the MPU PCB if replacing the Auxiliary Communications Port PCB did not correct the problem.

Paper low lamp never lights.

Possible Cause	Checks	Corrective Action
Bulb is burnt out.	Pull bulb and check filament. If there is no bulb to check, replace C09682.	Replace bulb if it is burnt out.
Defective paper low sense switch.	Using a DC voltmeter, measure across the wires to the switch. With switch pressed, +12VDC should be measured; with switch open, 0VDC should be measured.	Replace switch if it is mechanically or electrically defective.
Defective switch sense IC or lamp driver on the Auxiliary Communications Port PCB.	Using a DC voltmeter, measure U11 pin 4 of the Auxiliary Communications Port PCB. A low level 0VDC should be measured if paper is low.	Replace Auxiliary Communications Port PCB if +5VDC is measured at U11 pin 4 and paper is actually low. Replace Auxiliary Communications Port PCB if +5VDC is measured at U13 pin 3 when the paper low lamp should be lit.
Defective MPU PCB.		Replace the MPU PCB if replacing the Auxiliary Communications Port PCB did not correct problem.

Paper out lamp is lit.

Possible Cause	Checks	Corrective Action
Receipt printer is actually out of paper.	Check if receipt printer is out of paper.	Install new roll of paper. On the printer status PCB, the Alarm LED should turn off. Press the online switch. The online LED should light and the paper out lamp should turn off. *(NOTE: The paper out light will not go out until the online switch is pressed.)* If connected to a direct printout terminal, the system will report **Paper Refilled**.
Defective Star Controller PCB not properly reading paper out sense switch or defective paper out sense switch on printer mechanism.	Short out the black and white wires on connector CN5 of the Star Controller PCB. The Alarm LED on the Printer Status PCB should turn off.	Replace the Star Controller PCB if shorting CN5 does not turn off the Alarm LED. Replace the printer mechanism if shorting CN5 turns off the Alarm LED.
Defective lamp driver on the Auxiliary Communications Port PCB.	Using a DC voltmeter, measure pins 4 and 5 of U13 on the Auxiliary Communications Port PCB. +5VDC should be measured if paper out lamp should be off.	Replace the Auxiliary Communications Port PCB if +5VDC is measured at U13, pins 4 and 5 and the paper out lamp is on.
Defective MPU PCB.		Replace the MPU PCB if replacing the Auxiliary Communications Port PCB did not correct problem or if 0VDC is measured at U13, pins 4 and 5 on the Auxiliary Communications Port PCB when the paper out light is supposed to be off.

Paper out lamp never lights.

Possible Cause	Checks	Corrective Action
Bulb is burnt out.	Pull bulb and check filament. If there is no bulb to check, replace C09682.	Replace bulb if it is burnt out.
Defective Star Controller PCB not properly reading paper out sense switch or defective paper out switch on printer mechanism.	Pull the CN5 connector (black and white wires) out of the Star Controller PCB. The Alarm LED on the Printer Status PCB should turn on.	Replace the Star Controller PCB if pulling the CN5 connector does not turn on the Alarm LED. Replace the printer mechanism if pulling the CN5 connector turns on the Alarm LED.
Defective lamp driver on Auxiliary Communications Port PCB or defective MPU PCB.	Using a DC voltmeter, measure U13, pins 4 and 5 on the Auxiliary Communications Port PCB. Low level (0VDC) should be measured if the paper out lamp should be on.	Replace the Auxiliary Communications Port PCB if 0VDC is measured at U13, pins 4 and 5 and the paper out lamp is not lit. Replace the MPU PCB if +5VDC is measured at U13, pins 4 and 5, on the Auxiliary Communications Port PCB when the paper out lamp is supposed to be lit.

Printer can't enter self-test, printer can't exit self-test.

Can't Enter Self-Test

Possible Cause	Checks	Corrective Action
Printer is not online.	Examine online LED on Printer Status PCB.	If online LED is off, push online switch on Printer Status PCB to place printer online.
Defective self-test switch.	Using a DC voltmeter, measure between DC ground and P2 pin 4 of the Printer Status PCB. +12VDC is measured when self-test should be off; 0VDC is measured when self-test should be on. Turn self-test switch from off to on. Does voltage change?	Replace Printer Status PCB if voltage does not change when switch position is changed.
Defective switch sense IC on Auxiliary Communications Port PCB or defective MPU PCB.	Using a DC voltmeter, measure between DC ground and U12 pin 4 of the Auxiliary Communications Port PCB. +5VDC should be measured when self-test should be off; 0VDC should be measured when self-test should be on.	Replace the Auxiliary Communications Port PCB if +5VDC is measured when self-test should be on. Replace the MPU PCB if 0VDC is measured on U12, pin 4, of the Auxiliary Communications Port PCB when self-test should be on but self-test is not initiated.

Can't Exit Self-Test

Possible Cause	Checks	Corrective Action
Incorrect dip switch setting on MPU PCB.	Examine dip switch settings of positions 5 through 8. All positions should be open.	Open any dip switch positions (5 through 8) that are closed. Press the reset switch on the MPU PCB after changing switch positions.
Defective self-test switch.	Using a DC voltmeter, measure between DC ground and P2 pin 4 of the Printer Status PCB. +12VDC is measured when self-test should be off; 0VDC is measured when self-test should be on. Turn self-test switch from off to on. Does voltage change?	Replace Printer Status PCB if voltage does not change when switch position is changed.
Defective switch sense IC on Auxiliary Communications Port PCB or defective MPU PCB.	Using a DC voltmeter, measure between DC ground and U12 pin 4 of the Auxiliary Communications Port PCB. +5VDC should be measured when self-test should be off; 0VDC should be measured when self-test should be on.	Replace the Auxiliary Communications Port PCB if 0VDC is measured when self-test should be off. Replace the MPU PCB if +5VDC is measured on U12, pin 4, of the Auxiliary Communications Port PCB when self-test should be off but self-test is still printing.

Section 7

REPLACEMENT INSTRUCTIONS

DESCRIPTION

When servicing the Series 1000 you will find that most of the parts are easy to replace and do not require written replacement procedures. Most of the cables are keyed so they cannot be reversed which would cause additional service problems. The cables that are not keyed and any parts that require replacement procedures are detailed in the following pages.

IMPORTANT

Before replacing parts in the Series 1000 you must always turn off the system's internal power switch. However, to truly avoid any danger of electrical shock you must turn off the system's circuit breaker as well as the circuit breakers to all pumps/dispensers controlled by the system.

REPLACING AN MPU (MICROPROCESSOR) PCB

IMPORTANT: Before replacing an MPU PCB, be sure to poll the site and/or print out all the site's data (if possible).

1. Verify the jumper configuration of the new MPU PCB to ensure that it is ready for use. **Use extreme care in setting the jumpers. Incorrect configuration of JP3 and JP4 jumpers can corrupt memory causing fuel transactions to be lost.** Jumpers should be set up as shown on the table on the following page.
2. Remove the ROM chip from the socket labeled U21 of the inoperable MPU and install it in the U21 socket of the new MPU PCB. Be sure to install the ROM so that the end of the chip which is notched is positioned upward (towards the buzzer).
3. Remove the RAM chip from the socket labeled U23 of the inoperable MPU and install it in the U23 socket of the new MPU PCB. Be sure to install the RAM so that the end which has a small recessed circle in the top corner is positioned facing upward (towards the buzzer).
4. Software versions 8.1 or higher and the FleetKey system require an additional RAM chip in the U22 socket. Check if this MPU PCB has a RAM chip in the U22 socket which is the same size and shape as the RAM extracted from the U23 socket. If it does, remove the RAM chip from the U22 socket of the inoperable MPU and install it in the U22 socket of the new MPU PCB. Be sure to install the RAM so the end which has a small recessed circle in the top corner is positioned facing upwards (toward the buzzer).

   IMPORTANT: If the MPU PCB contains the additional RAM chip in the U22 socket, it is important to remember that although it appears to be identical to the RAM chip in the U23 socket, they are different. The RAM chip marked DS1235Y or bq4011 YMA-150 goes in the U23 socket and the RAM chip marked DS1225Y or bq4010 YMA-150 goes in the U22 socket.

Remove Old MPU Board

5. Disconnect all cables from the MPU PCB. There will be 8 to 10 cables depending on system options.
6. If applicable, disconnect cables and remove the Auxiliary Communications Port PCB by squeezing the retaining clips of the two plastic PC-board supports and pulling the board away from its mating connector on the MPU PCB. When the Auxiliary Communication Port PCB is removed, the two plastic PC-board supports should be removed by using a nutdriver to unscrew them.
7. Remove all screws and optional standoffs which secure the MPU PCB. Remove the MPU PCB from the Series 1000.

Install New MPU Board

8. Install the new MPU PCB and secure it in place with the previously removed screws and optional standoffs.
9. Screw the two plastic PC-board supports onto the screws protruding through the new MPU PCB. Replace the Auxiliary Communications Port PCB by matching up the mating connectors and pressing it into place on the MPU PCB. Re-connect all cables going to the Auxiliary Communications Port PCB.
10. Reconnect all cables to the MPU PCB. See page 2-8 for the proper location of each cable.

Jumper	Function	Setting
JP1	Viewing angle power	Center–A JP1 A B
JP2	Beeper enable	Jumpered JP2
JP3	EPROM map type The start address of the EPROM is written on the label of the program IC	7000 JP3 8000 JP3 9000 JP3 A000 JP3
JP4	U21 EPROM size The start address found on the EPROM determines the high order address line for U21 PCB's prior to Rev. G1 will not have this jumper patch and are automatically set in the ROM position, the PCB will need to be revised to accomodate the higher order address	7000 JP4 ROM RAM 8000 9000 A000 JP4 ROM RAM
JP5	U21 IC type (ROM/RAM)	Not used, always set at ROM
JP6	U22 RAM enable PCB's prior to Rev. G1 will not have this jumper patch so the U22 RAM is automatically disabled. The PCB will need to be revised to allow the RAM to be enabled.	Always jumpered (enabled) for FleetKey and Version 8.1 or higher software.
JP7	Debug disable	Jumpered JP7 BUG DIS
JP8	Interrupt setup (Power fail to IRQ)	IRQ–PF Jumpered JP8 IRQ PF NMI TMR
JP9	Deadman timer disable	No jumper (enabled) JP9 DT DIS
JP10 JP11	Serial port 1 baud rate Serial port 2 baud rate	Jumper according to baud rate desired JP10 or JP11 9600 4800 2400 1200 600 300
JP12 or K1 or JP14	Mag register size This jumper is available in this orientation for Rev. H – M PCB's. It should be jumpered according to the software version written on the EPROM (U21). It is used only for mag card systems.	**Revs. H & J** Versions 1–2 JP12 CARD 64 96 32 48 80 JP12 Versions 3–6 JP12 CARD 64 96 32 48 80 JP12 Version 7 or higher JP12 CARD 64 96 32 48 80 JP12 **Rev. K** Jumpers found on piggy–back mag register PCB Versions 1–2 K1 64 48 32 Versions 3–6 K1 64 48 32 Version 7 or higher K1 64 48 32 **Rev. L or ABOVE** Versions 1–2 JP14 64 48 32 Versions 3–6 JP14 64 48 32 Version 7 or higher JP14 64 48 32
JP13	Bus pull–up enable (Not available on all MPU PCB's)	No jumper (No pull–ups) JP13

REPLACING THE RAM CHIP(S)

IMPORTANT: Before replacing RAM chips, be sure to poll the site and/or print out all the site's data (if possible).

Card or cardless systems prior to version 8.1 have only one 32K RAM chip, located in socket U23. Card and cardless systems version 8.1 or higher and FleetKey systems have two RAM chips, an 8K and a 32K, located in sockets U23 and U22, respectively. When replacing both RAM chips, replace the 32K RAM located in socket U23 first. Then run diagnostic test 6. If the system fails the test, replace the 8K RAM in socket U22.

Remove Old RAM

1. Locate the RAM chip in the U23 (or U22) socket of the MPU PCB. This socket is located in approximately the center of the MPU PCB board. (See page 2-8).

2. Place a small slotted screwdriver gently between the RAM chip and the socket, and pry the RAM chip away from the socket. It may be necessary to pry the chip slightly from one end and then slightly from the other end, alternating ends until it can be removed without bending or breaking its pins.

Insert New RAM

3. Locate the small shiny circle on one corner of the RAM chip; this indicates Pin 1. Position the new RAM chip so each of its pins are properly lined-up with the U23 (or U22) socket on the MPU PCB. The small shiny circle (Pin 1) should be at the upper lefthand corner of the chip when it is positioned in the MPU PCB.

4. Firmly press the RAM chip into the socket. It is important to be sure that the pins are aligned with the socket; use of excessive force can cause the pins to bend when they are misaligned.

5. Use diagnostic test 1 or code card to set the password to GASBOY.

6. Reset and reload system data.

REPLACING THE ROM CHIP

IMPORTANT: Before replacing ROM chips, be sure to poll the site and/or print out all the site's data (if possible).

Remove Old ROM

1. Locate the ROM chip in the U21 socket of the MPU PCB. This socket is located in approximately the center of the MPU PCB board and to the left of the RAM chip. (See page 2-8).

2. Place a small slotted screwdriver gently between the ROM chip and the socket, and pry the ROM chip away from the socket. It may be necessary to pry the chip slightly from one end and then slightly from the other end alternating ends until it may be removed without bending or breaking its pins.

Insert New ROM

3. The ROM program chip is labeled with the program name, version, start address, and a directional arrow. The directional arrow points to a U-shaped notch indicating the top of the program chip. Position the new ROM chip so each of its pins are properly lined-up with the U21 socket on the MPU PCB and the arrow points up.

4. Firmly press the ROM chip into the socket. It is important to be sure that all the pins are aligned with the socket; use of excessive force can cause the pins to bend when they are misaligned.

5. Use diagnostic test 1 or code card to set the password to **GASBOY**.

6. Sign on to the system and reload system data.

REPLACING AN AUXILIARY COMMUNICATION PORT PCB

Remove Old PCB

1. Disconnect all cables from the Auxiliary Communication Port PCB.

2. Squeeze the retaining clips on the two plastic PC Board Supports and pull the Auxiliary Communication Port PCB forward to release it.

3. Grasp the Auxiliary Communication Port PCB at the top and bottom of the left edge and pull it forward to remove it from its mating connector on the MPU PCB.

Install New PCB

4. Install the new Auxiliary Communication Port PCB by inserting it into its mating connector on the MPU PCB, while slipping it onto the two plastic PC Board Supports. Verify that it is fully inserted into the MPU PCB and that the two retaining clips are holding it firmly in place.

5. Verify that the baud rate selections of the new Auxiliary Communication Port PCB are set up correctly. Refer to the figure on page 2-20 for port locations, if necessary.

6. Reconnect the cables to the Auxiliary Communication Port PCB. Refer to the figure on page 2-20 for cable locations, if necessary. There is only one cable for the Tank Monitor Interface option and three cables for the Receipt Printer option.

REPLACING A PC (PUMP CONTROL) PCB

Remove Old PCB

1. Disconnect all cables from the inoperable PC PCB. It may be necessary to remove the ribbon cable from all of the other PC PCBs to allow clearance for removal of the inoperable PC PCB.

2. Remove the two screws which secure the PC PCB to the PCB Support Bracket. Slide the PC PCB forward and out of the support bracket.

Install New PCB

3. Verify that the jumper configuration of the new PC PCB is set up correctly. See page 2-19 for jumper explanations and locations or simply set the new PC PCB jumpers to match the jumpers on the inoperative PC PCB.

4. Slide the new PC PCB back into the PCB Support Bracket and secure it with the two screws which were removed in Step 2.

5. Reconnect the three cables to the rear of the PC PCB. Reconnect the ribbon cable to the front of the PC PCB and verify that the cable is securely connected to each PC PCB in the Series 1000.

REPLACING A MAG READER AND CABLE

Before changing the mag reader, use a cleaning card to ensure that the head of the mag reader is free from dirt.

Insert the cleaning card with the fuzzy side facing down. Remove and re-insert the card several times. Turn the card around (fuzzy side still facing down) and repeat the previous step. Then retry the reader.

If it is still malfunctioning, examine the card guides for any type of debris (pieces of card labels, dirt deposits, etc.) that may be interfering with the normal operation of the reader. Be sure to examine the guides over the entire length that the card travels. Removal of the external face of the mag reader allows a more thorough examination. Removal of all foreign matter usually returns the mag reader to normal operation. Reassemble and retry the mag reader.

Remove Old Mag Reader

1. Unlock and open the rear door on the head of the Series 1000.

2. Turn off the AC power switch located on the right side of the unit.

3. Remove the hood of the unit.

4. Working inside the head of the unit, remove the four screws that secure the external cover assembly (shields the mag card reader) to the face of the unit. Save these screws and the cover; you will reinstall them after replacing the mag reader.

5. Locate the J5 connector in the middle of the left edge of the Series 1000 MPU PCB. Disconnect the attached cable.

6. Working inside the head of the unit, remove and set aside the two screws, one on each side, that secure the mag reader to the face of the unit.

7. Remove the mag card reader with cable and rubber gasket from the front of the unit.

Install Mag Reader

8. Holding the mag reader so that the larger square protruding card guide is on the left and the smaller guide is on the right, install the new rubber gasket and insert the unit into the cabinet face.

9. Insert the two screws used to secure the reader and tighten.

10. Connect the cable from the mag reader to the Series 1000. Check the rear of the mag reader for your model number and select the proper procedure below to install the cable.

    For Model 100, Rev. L, install the mag reader with the black wire to the left (as viewed from behind the reader). If the black wire is to the right the cable is reversed and must be corrected to avoid incorrect data transfer.

For Model 110, the reader appears to have two identical 10-position connectors. Upon closer inspection, one connector has a red wire looped between pins 9 and 10. This connector attaches to the MPU PCB; the other connector attaches to the mag reader with the black wire positioned as shown below.

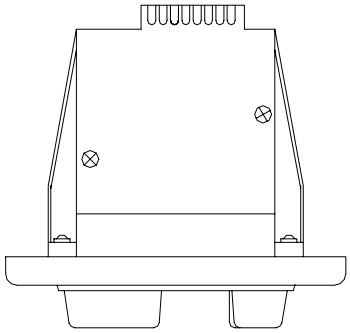

Model 100 Rev. L

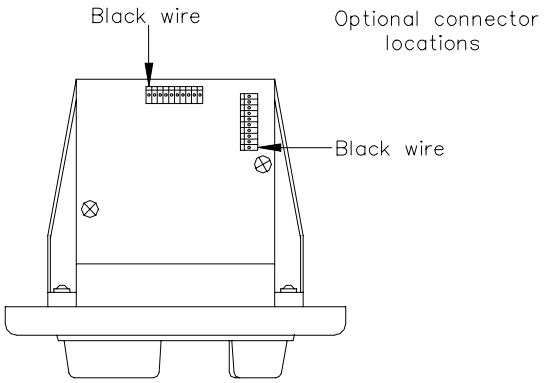

Model 110

ORDERING INFORMATION: When replacing a Model 100, Rev. L mag reader, order GASBOY P/N C05780. When replacing a Model 110 mag reader, order GASBOY P/N C08597. If you are unsure as to which model mag reader you are replacing, order GASBOY P/N C05780.

REPLACING AN OPTICAL READER

Remove Old Optical Reader

1. Unlock and open the rear door on the head of the Series 1000.

2. Turn off the AC power switch located on the right side of the unit.

3. Remove the hood of the unit.

4. Locate the J5 connector in the middle of the left edge of the Series 1000 MPU PCB. Disconnect the attached cable. Directly beneath the J5 connector is the J6 connector. Disconnect the cable.

5. Working inside the head of the unit, use a flat blade screwdriver to remove the two screws and nuts which secure the optical reader to the optical reader bracket attached to the face of the unit. Slide back and remove the optical reader, its PCB and support bracket.

6. Remove the PCB and its support bracket from the old optical reader and set aside.

Install Optical Reader

7. Attach the PCB and its support bracket to the new optical reader.

8. Slide the reader, PCB, and support bracket onto the optical reader bracket attached to the face.

9. Replace and tighten the two screws and nuts securing the optical reader to the optical reader bracket.

10. Reattach the cable from the optical reader to the J5 connector of the MPU PCB. Reattach the ribbon cable from the optical reader PCB to the J6 connector on the MPU PCB.

REPLACING THE KEYPAD

Remove Old Keypad

1. Disconnect keypad cable from MPU board.
2. Unscrew the four nuts securing the keypad support bracket. Save the four nuts to secure new keypad.
3. Push keypad from outside of unit into head and remove keypad.

Install New Keypad

4. Place keypad gasket onto four studs of keypad mount.
5. Place keypad onto four studs of keypad mount.
6. Replace four nuts securing keypad.
7. Attach keypad cable to J8 of MPU board.

REPLACING THE DISABLE PUMPS SWITCH

Remove Old Switch

1. Locate the Disable Pumps switch inside the head of the unit.

2. Find the side of the switch which is connected to the two black wires. On this side, towards the front, you will find a release lever.

3. Slide the release lever upward and pull the switch contact block towards the rear of the unit.

   NOTE: If you only want to replace the external portion of the switch, go to Step 6.

4. Loosen screws and remove the four wires from the switch contact block.

Install New Switch

5. Install the wires on the new switch contact block being sure to install the black wires on the side with the release lever.

   NOTE: If you also want to replace the external portion of the switch, go to Step 6.

6. Press the switch contact block back onto the external portion of the switch. It is keyed to go on only one way. When it's in place, slide the release lever downward to lock the switch together and the process is complete.

7. Remove the plastic nut which holds the external portion of the switch from inside the unit. Pull the switch out of the front of the unit. Reverse this step to install the new switch. Perform Step 5 to complete the process.

REPLACING A RELAY MODULE

WARNING
To avoid electrical shock and possible equipment damage you must turn off the circuit breaker which provides system power as well as the circuit breakers for all attached pumps/dispensers.

Remove Old Module

1. Locate the inoperable relay module in the Series 1000 post.

2. Record the positions of all field wiring as it is attached to the Pump Power Terminal Block of the relay module. Label any unmarked or common colored wires to make them easily identifiable later.

3. Disconnect all of the field wiring from the Pump Power Terminal Block by loosening the screws and removing the wires.

4. Locate the two mounting screws (one at each end of the relay module). Loosen the screws until the relay module may be pulled forward and away from the mounting bracket.

5. There are four relay drive wires (red, violet, orange, and black) attached to the relay module. Loosen the screw on each relay until the relay drive lines may be removed.

Install New Module

6. Attach the four relay drive wires to the new relay module. See page 3-6 for proper positioning of wires.

7. Position the relay module into the vacated slot of the mounting bracket lining up the mounting screws with the holes in the mounting bracket. Tighten the mounting screws until the relay module is secure.

8. Attach all field wiring to the proper positions of the new Pump Power Terminal Block. Use the positions that were recorded in Step 2.

REPLACING A RELAY

WARNING
To avoid electrical shock and possible equipment damage you must turn off the circuit breaker which provides system power as well as the circuit breakers for all attached pumps/dispensers.

Remove Old Relay

1. Locate the relay module in the Series 1000 post which contains the inoperable relay.

2. Record the positions of all field wiring as it is attached to the Pump Power Terminal Block of the relay module. Label any unmarked or common colored wires to make them easily identifiable later.

3. Disconnect all of the field wiring from the Pump Power Terminal Block by loosening the screws and removing the wires.

   NOTE: If there is enough slack in your field wiring, you may not need to disconnect all the wiring.

4. Locate the two mounting screws (one at each end of the relay module). Loosen the screws until the relay module may be pulled forward and away from the mounting bracket.

5. There are 4 relay drive wires (red, violet, orange, and black) attached to the relay module. Loosen the screw on each relay until the relay drive lines may be removed.

6. Locate the inoperable relay by matching the relay position to the Pump Power Terminal Block of the relay module. Loosen the three screws which have wires connected to them (noting the wire positions) until the wires may be removed from the relay.

7. Locate and remove the two screws that secure the relay to the relay module.

Install New Relay

8. Install the new relay so it is positioned in the same manner as the existing relays. Secure it with the two screws from the previous step.

9. Reconnect the three relay wires to their proper positions. Reconnect the four relay drive lines to the relay module. See page 3-6 for proper wire positions.

10. Position the relay module into the vacated slot of the mounting bracket lining up the mounting screws with the holes in the mounting bracket. Tighten the mounting screws until the relay module is secure.

11. Attach all field wiring to the proper positions of the Pump Power Terminal Block. Use the positions that were recorded in Step 2.

REPLACING A PUMP OVERRIDE SWITCH

WARNING
To avoid electrical shock and possible equipment damage you must turn off the circuit breaker which provides system power as well as the circuit breakers for all attached pumps/dispensers.

Remove Old Switch

1. Locate the relay module in the Series 1000 post which contains the inoperable pump override switch.

2. Record the positions of all field wiring as it is attached to the Pump Power Terminal Block of the relay module. Label any unmarked or common colored wires to make them easily identifiable later.

3. Disconnect all of the field wiring from the Pump Power Terminal Block by loosening the screws and removing the wires.

   NOTE: If there is enough slack in your field wiring, you may not need to disconnect all the wiring.

4. Locate the two mounting screws (one at each end of the relay module). Loosen the mounting screws until the relay module may be pulled forward and away from the mounting bracket.

5. There are four relay drive wires (red, violet, orange, and black) attached to the relay module. Loosen the screw on each relay until the relay drive lines may be removed.

6. Locate the inoperable pump override switch on the relay module. Begin sliding the wires off the switch by pulling them back towards the relays. Be sure to note the wire positions so you can re-attach them correctly to the new switch.

7. Locate the retaining ring on the front of the switch. Grasp it firmly and turn it counterclockwise until the ring is removed from the switch. Remove the switch by pulling it out of the rear of the bracket.

Install New Switch

8. Insert the new switch and turn the retaining ring clockwise to secure it.

9. Attach the six wires to the switch by sliding the wire terminals firmly onto the switch contact lugs.

10. Attach the four relay drive wires to the relay module. See page 3-6 for proper positioning of wires.

11. Position the relay module into the vacated slot of the mounting bracket lining up the mounting screws with holes in the mounting bracket. Tighten the mounting screws until the relay module is secure.

12. Attach all field wiring to the proper positions of the Pump Power Terminal Block. Use the positions that were recorded in Step 2.

REPLACING A BUILT-IN MODEM

Remove Old Modem

1. Locate the modem inside the head of the Series 1000. It is mounted on the inside of the metal plate which holds the MPU PCB.

2. Disconnect the ribbon cable and the 2-position phone line connector from the modem.

3. The modem is secured to four mounting posts which have release levers holding it in place. Push in the release lever for one of the posts and pull that corner of the modem outward (off the post) as far as it will go. Repeat this procedure for each post until the modem may be slipped off the posts and removed. Be careful not to let the modem slip down on the post and be reheld by the retaining levers.

Install New Modem

4. Install the new modem by pressing it firmly onto the posts until the retaining levers hold it securely in place. Position the modem so its two connectors are located toward the base of the Series 1000 head assembly.

5. Reconnect the ribbon cable to the 20-position modem connector so that pin 1 (the red or dark blue edge of the cable) faces down.

6. Reconnect the 2-position phone line connector to the modem with the green wire facing downward.

ORDERING INFORMATION: When replacing a modem, first verify the revision level of the Series 1000 MPU PCB. If the revision level is less than Rev. N, the C05738 Modem Communication Ribbon Cable must be replaced with C07004 Modem Communication/Power Cable to allow proper modem operation. Remember to order a C07004 cable with the modem when required.

REPLACING A PRINTER CONTROLLER PCB

Remove Old PCB

1. Disconnect all 7 cables from the Printer Controller PCB.

2. Remove the 6 nuts which secure the Printer Controller PCB to the Printer Mounting Bracket. Also remove the 3 fiber washers from the top 3 standoffs before removing the defective Printer Controller PCB.

3. Verify that the switch settings of the new Printer Controller PCB are correct. Switch 1 is an eight position DIP switch and should have switch positions 5 and 8 set to the off position. Switch 2 is a four position DIP switch and should have switch position 4 set to the off position. All other switch positions are on. Refer to the *Series 1000 Operation Manual* for a chart and diagram on Controller Board DIP Switch Settings.

Install New PCB

4. Install the new Printer Controller PCB (component side toward the printer mechanism and phone jack connector pointing down) and secure it with the previously removed nuts and fiber washers. Be sure to install the fiber washers on the top 3 standoffs to prevent any shorting of traces that may otherwise occur.

5. Reconnect all 7 cables to the Printer Controller PCB.

REPLACING THE PRINTER MECHANISM

Remove Old Mechanism

1. Disconnect the 10 position (white) and 12 position (red) connectors from the top of the printer mechanism. Also disconnect the 2 position and 3 position connectors from the Printer Controller PCB.

2. The printer mechanism is secured with 4 screws and washers. Loosen the 2 bottom screws but do not remove them. Remove the 2 top screws and washers and then lift the defective printer mechanism away from the Printer Mounting Bracket.

Install New Mechanism

3. Install the new printer mechanism (cable connectors upward) by slipping its 2 bottom mounting slots behind the flat washers on the remaining 2 bottom screws and securing the 2 upper slots with the previously removed screws and washers. Be sure the wires from the 2 position and 3 position connectors are not pinched and are fed out the top of the printer mechanism. Snug all four screws, but do not over-tighten or you may damage the secured nuts.

4. Reconnect the 2 position and 3 position connectors to the Printer Controller PCB. Also reconnect the 10 position (white) and 12 position (red) connector from the Printer Controller PCB to the printer mechanism.

Section 8

REPLACEMENT PARTS

USING THIS SECTION

The drawings and part lists on the following pages are provided as an easy reference for identifying Series 1000 parts and their corresponding part numbers. Using the part numbers when ordering will expedite your order and reduce the possibility of the wrong parts being shipped. Multiple views of the system are provided to ensure all parts are identified.

An asterisk (*) in front of a part number denotes that part is a sub-part of the preceding part without an asterisk. Consecutive part numbers with asterisks are all sub-parts of the first preceding part without an asterisk.

Example:

5.	C05724	Cable Assy., Disable Pumps
6.	*C08600	Switch Operator, Push-Pull, Red
7.	*C08601	Switch, Contact Block, 1NO,-1NC

In the example, parts 6 and 7 are a sub-part of part 5. If part 5 was ordered, parts 6 and 7 would be included. If desired, part 6 or 7 could be ordered separately.

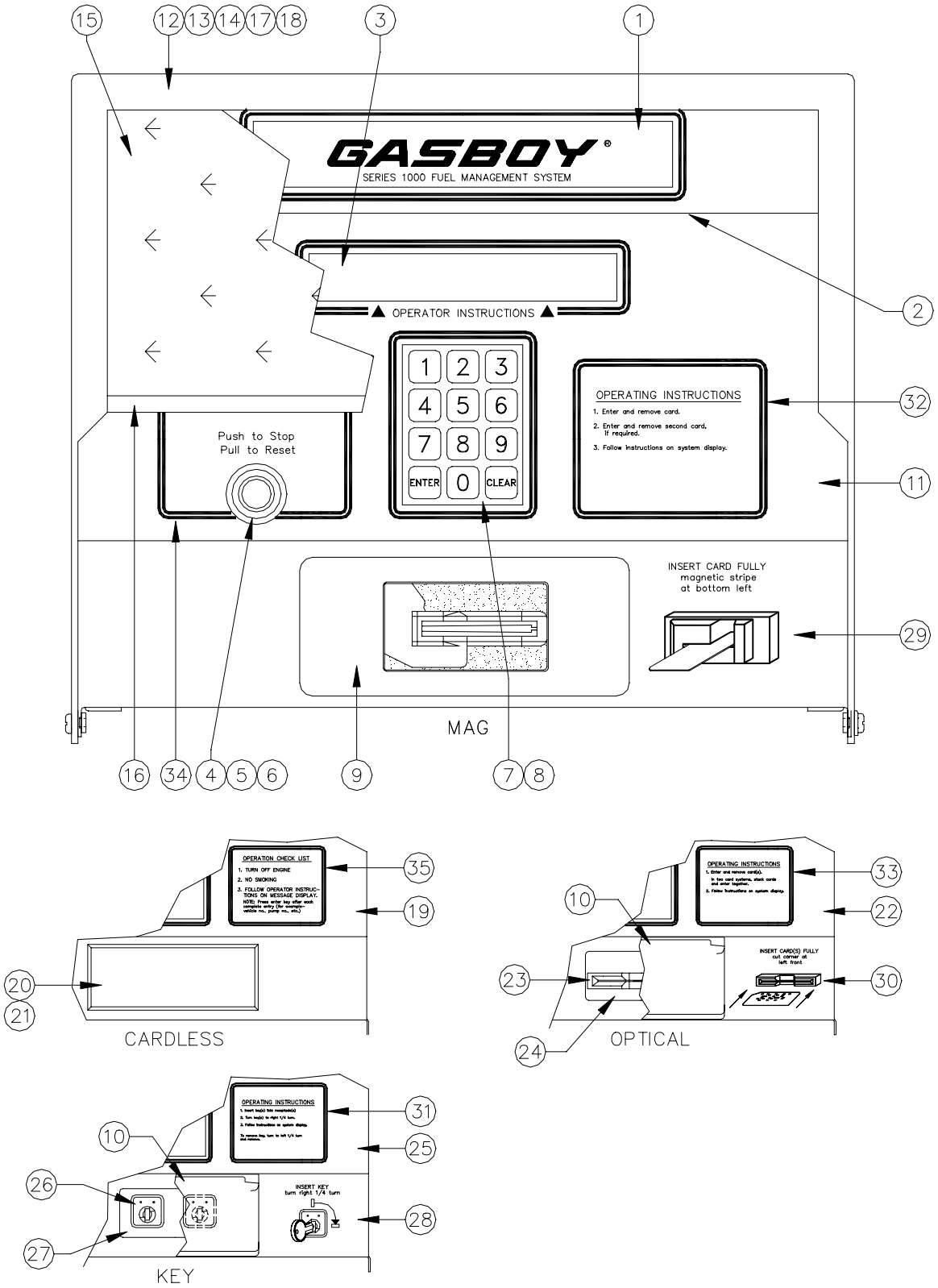
GASBOY®
SERIES 1000 FUEL MANAGEMENT SYSTEM
OPERATOR INSTRUCTIONS
1 2 3
4 5 6
7 8 9
ENTER 0 CLEAR
OPERATING INSTRUCTIONS
1. Enter and remove card.
2. Enter and remove second card, if required.
3. Follow instructions on system display.
Push to Stop
Pull to Reset
INSERT CARD FULLY
magnetic stripe
at bottom left
MAG
OPERATION CHECK LIST
1. TURN OFF ENGINE
2. NO SMOKING
3. FOLLOW OPERATOR INSTRUCTIONS ON MESSAGE DISPLAY.
CARDLESS
OPERATING INSTRUCTIONS
INSERT CARD(S) FULLY
cut corner at
left front
OPTICAL
OPERATING INSTRUCTIONS
INSERT KEY
turn right 1/4 turn
KEY
1
2
3
4
5
6
7
8
9
10
11
15
16
17
18
19
20
21
22
23
24
25
26
27
28
29
30
31
32
33
34
35

HEAD - FRONT VIEW, SILKSCREENED, OLD STYLE

Item	Part No.	Description
1	C34836	Window, Silkscreen Display (White)
2	C34136	Window, Illumination (Clear)
3	C34755	Shield, LCD Display (Clear)
4	C05724	Cable Assy., Disable Pumps
5	*C08600	Switch Operator, Push - Pull, Red
6	*C01590	Contact Block, 1NC - #E22B1 (Not Shown)
	*C01591	Contact Block, 1NO - #E22B2 (Not Shown)
7	C08586	Keypad, 3 x 4 Sealed
8	*C01611	Keypad gasket
9	C09985	Mag Card Reader, Cable, and Gasket Assy.
10	C34843	Cover Assy., Card Reader (Not Shown; Optical and Key Only)
11		Silkscreen Mag Head Assy., (Metal Only) **Not available; order C34747.**
12	C05777	Housing Wrapper
13	*C34745	Housing Wrapper Weld Assy. (Metal Only)
14	*C34780	Bracket, Shield Retainer - Top (Metal Only)
15	*C34754	Shield, Housing Wrapper
16	*C04371	Trim Material - Edge (Order 2 Feet)
17	*C08741	Gasket, Bulk 3/ 16 x 1/2 (Hood Rear Seal - Order 4 Feet)
18	C08739	Wing nut, 1/4-20
19		Silkscreen cardless head assembly **Not available; order C34747.**
20	C35256	Cover plate, non-reader
21	C01655	Gasket, non-reader plate
22		Silkscreen, optical head assembly (metal only) **Not available; order C34747.**
23	C05631	Optical Reader Assy.
24	C34841	Adapter plate, optical reader (metal only)
25	C35289	Silkscreen Key head assembly
26	C02848	Key receptacle
27	C35298	Adapter plate, key receptacle, 1-key (metal only)
	C35287	Adapter plate, key receptacle, 2-key (metal only)
28	C01519	Decal, Insert Key... (FleetKey Systems)
29	C01307	Decal, Insert Card Fully... (Mag Card Systems)
30	C01305	Decal, Insert Card(s) Fully... (Optical Card Systems)
31	C01518	Decal, Operating Instructions... (FleetKey Systems)
32	C01308	Decal, Operating Instructions... (Mag Card Systems)
33	C01306	Decal, Operating Instructions... (Optical Card Systems)
34	C01310	Decal, Disable Pumps
35	C01309	Decal, Operation Check List... (Cardless Systems)

*Denotes this is a sub-part used in the preceding assembly

IMPORTANT: *The new style card reader (Panasonic) works only with Series 1000 versions 3 or later. To check your version: At the Series 1000 data terminal, type the* ***PR*** *command at the asterisk prompt. The version, program name, and date displays. If your version is 1 or 2, consult your distributor before proceeding.*

FleetKeys (Not Shown)

C01625	FleetKey, Black
C01624	FleetKey, Gray
C01623	FleetKey, Green

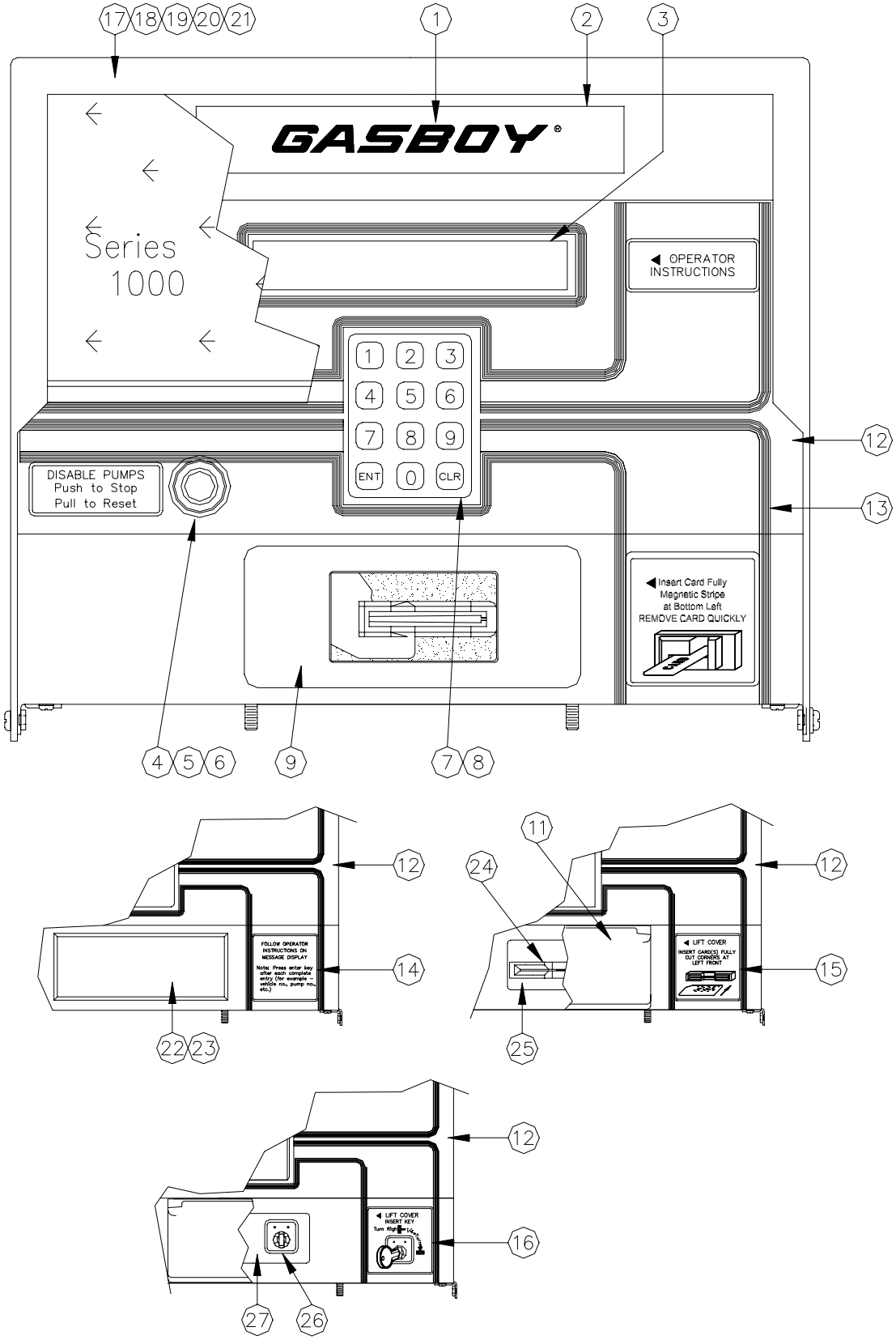
17
18
19
20
21
1
2
3
GASBOY®
Series
1000
OPERATOR
INSTRUCTIONS
1
2
3
4
5
6
7
8
9
ENT
0
CLR
12
13
DISABLE PUMPS
Push to Stop
Pull to Reset
Insert Card Fully
Magnetic Stripe
at Bottom Left
REMOVE CARD QUICKLY
4
5
6
9
7
8
12
14
FOLLOW OPERATOR
INSTRUCTIONS ON
MESSAGE DISPLAY
Note: Press enter key
after each complete
entry (for example –
vehicle no., pump no.,
etc.)
22
23
11
24
12
15
LIFT COVER
INSERT CARD(S) FULLY
CUT CORNERS AT
LEFT FRONT
25
12
16
LIFT COVER
INSERT KEY
27
26

HEAD - FRONT VIEW, OVERLAY, NEW STYLE

Item	Part No.	Description
1	C01231	Decal, GASBOY, Blue Background
2	C34847	Window, Display, Blank, White
3	C34755	Shield, LCD Display
4	C05724	Cable Assy., Disable Pumps
5	*C08600	Switch Operator, Push-Pull, Red
6	*C01590	Contact Block, 1NC - #E22B1 (Not Shown)
	*C01591	Contact Block, 1NO - #E22B2 (Not Shown)
7	C08586	Keypad, 3 x 4 Sealed
8	*C01611	Keypad gasket
9	C09985	Mag Card Reader, Cable, and Gasket Assy.
11	C34843	Cover Assy., Card Reader (Not Shown; Optical and Mag Only)
12	C34747	Painted Head Assy., (Metal Only)
13	C09500	Overlay, Head, Mag *(NOTE: If system is not mag, order one of item 14, 15 or 16 depending on system type.)*
14	C09498	Decal Insert, Cardless (For use with C09500 only)
15	C09497	Decal Insert, Optical (For use with C09500 only)
16	C09499	Decal Insert, Key (For use with C09500 only)
17	C06615	Housing Wrapper Assy.
18	*C35470	Housing Wrapper Weld Assy.
19	*C34780	Bracket, Shield Retainer - Top (Metal Only)
20	*C35494	Shield, Clear, 1/4 thick
21	*C01989	Gasket, Bulk, 1/4 x 1/2 (4 ft)
22	C35256	Cover Plate, Non-reader
23	C01655	Gasket, non-reader plate
24	C05631	Optical reader Assy.
25	C34841	Adapter plate, optical reader (metal only)
26	C02848	Key receptacle
27	C35298	Adapter plate, key receptacle, 1-key (metal only)
	C35287	Adapter plate, key receptacle, 2-key (metal only)

*Denotes this is a sub-part used in the preceding assembly

IMPORTANT: *The new style card reader (Panasonic) works only with Series 1000 versions 3 or later. To check your version: At the Series 1000 data terminal, type the* ***PR*** *command at the asterisk prompt. The version, program name, and date displays. If your version is 1 or 2, consult your distributor before proceeding.*

FleetKeys (Not Shown)

C01625	FleetKey, Black
C01624	FleetKey, Gray
C01623	FleetKey, Green

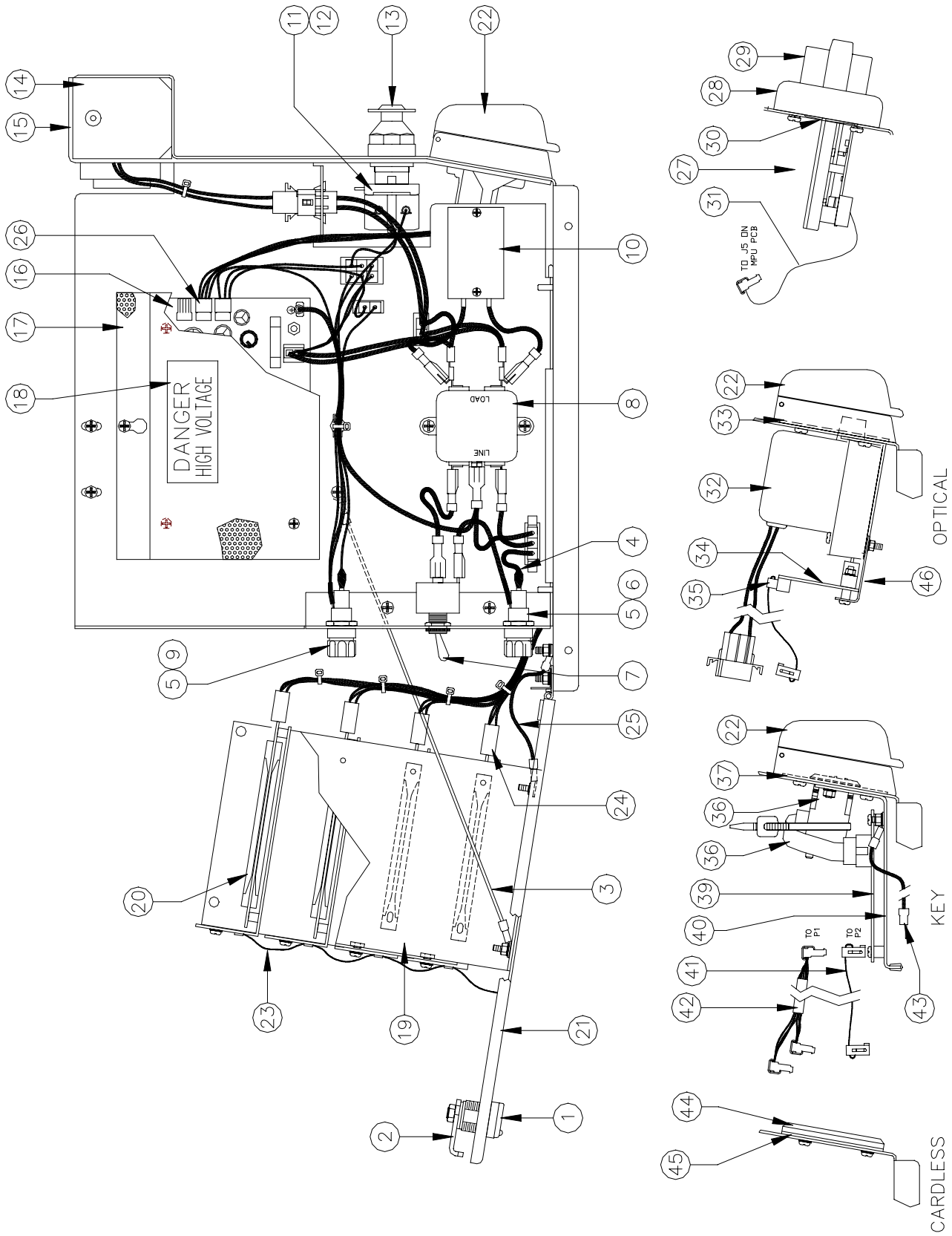
DANGER
HIGH VOLTAGE
LOAD
LINE
TO J5 ON
MPU PCB
OPTICAL
TO
P1
TO
P2
KEY
CARDLESS

HEAD - POWER SUPPLY SIDE VIEW

Item	Part No.	Description
1	035009	Lock and Key
2	C34753	Cam for Lock, Rear Door
3	C08709	Cable/Eye Assy., Door Catch, 12" Long
4	C05714	Harness Assy., Power
5	*C02065	Fuse Holder, Solder Term., Panel Mount
		OR
	*C09546	Fuse Holder, Quick Conn.
6	*C02634	Fuse 3A, Slow Blow, 1/4 x 1-1/4
7	*C02704	Switch, Toggle, SPST, 15A Spade
8	*C02446	Line Interference Filter, 5A
9	*C08593	Fuse, 1.5A., Quick Blow, 1/4 x 1-1/4
10	C05733	Cable Assy., Transzorb
11	C05724	Cable Assy., Disable Pumps
12	*C01590	Contact Block, 1NC - #E22B1 (Not Shown)
	*C01591	Contact Block, 1NO - #E22B2 (Not Shown)
13	*C08600	Switch Operator, Push - Pull, Red
14	C34826	Guide, Light Shield
15	027146	Gasket, 1/8 x 1/4 x 3 Feet Long (Order 2 Pieces)
16	C09053	Power Supply, 50W., 5V./12V.
17	C34769	Cover, Power Supply (Metal Only - Also Order Item #18)
18	C08756	Label, "DANGER, HIGH VOLTAGE"
19	C34733	PCB Support Bracket Assy., (Power Supply Side - Metal Only)
20	C02518	Card Guide
21	C34728	Door Weld Assy. (Metal Only)
22	C34843	Cover assembly, card reader (Optical and Key only)
23	Cable Assy., Ribbon, PC to MPU	
	C05722	8 pump
	C05766	6 pump
	C05767	4 pump
	C05768	2 pump
24	C05689	Cable assy., switch detect, pulser, PC
25	C05776	Ground wire assy.
26	C05707	Cable assy., MPU DC power
27	C09985	Mag Card reader, cable and gasket assy.
28	*C09989	Adapter Plate
29	*C09988	Mag Card Reader
30	*C34613	Gasket
31	*C06169	Cable
32	C05631	Optical reader assy.
	*C05629	Lamp Housing (Series 1000)
	*C04406	Glass w/metal edge
33	C34841	Adapter plate, optical reader (Metal only)
34	C05788	PCB Assy., edge conn to ribbon cable
35	C04853	Cable assy., ribbon optical reader
36	C02848	Key receptacle and tie wrap
37	C35298	Adapter plate, key receptacle, 1-key (metal only)
	C35287	Adapter plate, key receptacle, 2-key (metal only)
38	C06267	Cable Assy., 10-pos Key ribbon
39	C06264	PCB Assy, Key I/F
40	C35288	Bracket assy., Key I/F PCB mounting (metal only)
41	C05435	Cable assy., 26-pos, ribbon
42	C06266	Cable assy., Key I/F - CPU w/o receipt printer
	C06291	Cable assy., Key I/F - CPU w/receipt printer
43	C06178	Cable assy., ground strap, 4.5"L
	C05644	Cable assy., ground strap, 13"L
44	C35256	Cover plate, non-reader
45	C01655	Gasket, non-reader plate
46	C35292	Bracket, Optical Interface PCB retainer (subpart of 34)

*Denotes this is a sub-part used in the preceding assembly

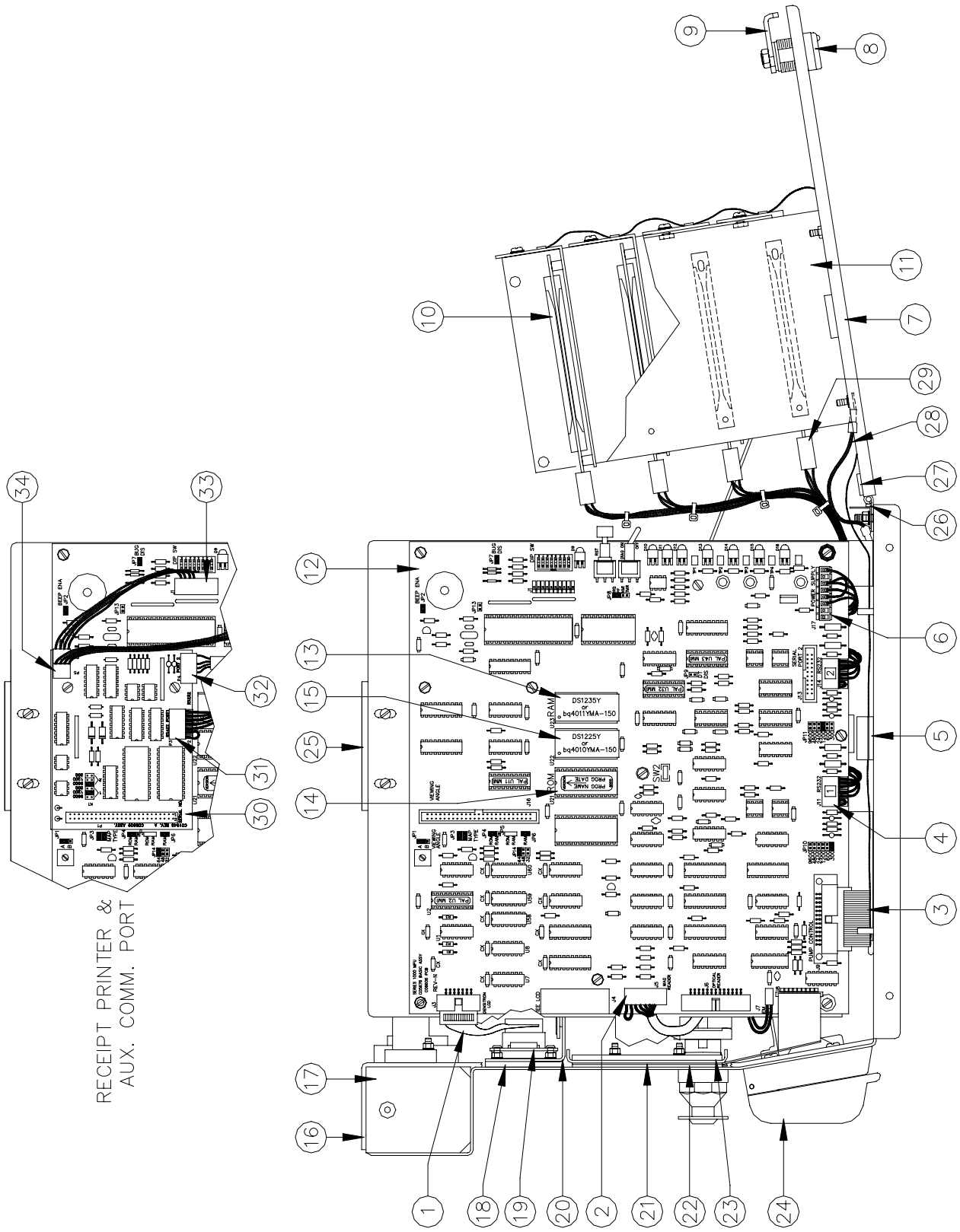
RECEIPT PRINTER &
AUX. COMM. PORT
DS1235Y
or
bq4011YMA-150
DS1225Y
or
bq4010YMA-150
RAM
ROM
1
2
3
4
5
6
7
8
9
10
11
12
13
14
15
16
17
18
19
20
21
22
23
24
25
26
27
28
29
30
31
32
33
34

HEAD - MPU SIDE VIEW

Item	Part No.	Description
1	C05708	Cable Assy., Ribbon LCD
2	C05938	Cable Assy., Mag Card Reader Insertion (Rev. B)
3	C05722	Cable Assy., Ribbon, PC to MPU, 8 Pumps
	C05766	Cable Assy., Ribbon, PC to MPU, 6 Pumps
	C05767	Cable Assy., Ribbon, PC to MPU, 4 Pumps
	C05768	Cable Assy., Ribbon, PC to MPU, 2 Pumps
4	C05706	Cable Assy., Serial Ports and Pulser Power
5	C02207	Clamp, Ribbon Cable
6	C05707	Cable Assy., MPU - DC Power
7	C34728	Door Weld Assy., (Metal Only)
8	035009	Lock and Key
9	C34753	Cam For Lock, Rear Door
10	C02518	Card Guide
11	C34729	PCB Support Bracket Assy., (MPU Side - Metal Only)
12	C05676	PCB Assy., MPU
13	C08629	IC, RAM - 32K x 8 CMOS, Non-Volatile (Dallas DS1235Y or Benchmarq bq4011YMA-150)
14	CPK002	Program, Series 1000 IC, EPROM - 32K x 8, Programmed
15	C08643	IC, RAM, 8K x 8 CMOS (standard versions 8.1 or higher or FleetKey software only)
16	027146	Gasket, 1/8 x 1/4 x 3 Feet Long (Order 2 Pieces)
17	C34826	Guide, Light Shield
18	C34755	Shield, LCD display (clear)
19	C05770	LCD Display and Header Assy.
20	C34767	LCD bracket assy. (metal only)
21	C08586	Keypad, gasket, bracket assy.
22	*C01611	Gasket, keypad
23	*C35303	Bracket, keypad (metal only)
24	C34843	Cover assy., card reader
25	C34825	Bracket, wrapper assy., support
26	026980	Gasket, 1/16 x 1/8 x 3 feet long (order 1 piece)
27	C01989	Gasket, 1/4 x 1/2 (order 2 feet)
28	C05776	Ground wire assy
29	C05689	Cable assy., switch detect, pulser, PC
30	C05909	PCB Assy., Aux. Comm. Port
31	C05918	Cable Assy., Aux. Comm. - 24" standard unit
	C06090	Cable Assy., Aux. Comm. - 48" w/receipt printer
32	C06087	Cable assy., printer RS-232 communication
33	C05919	Cable assy., Aux. Comm. to MPU
	C06291	Cable assy., Aux. Comm. to MPU for Key system
34	C06085	Cable assy., printer and lamps

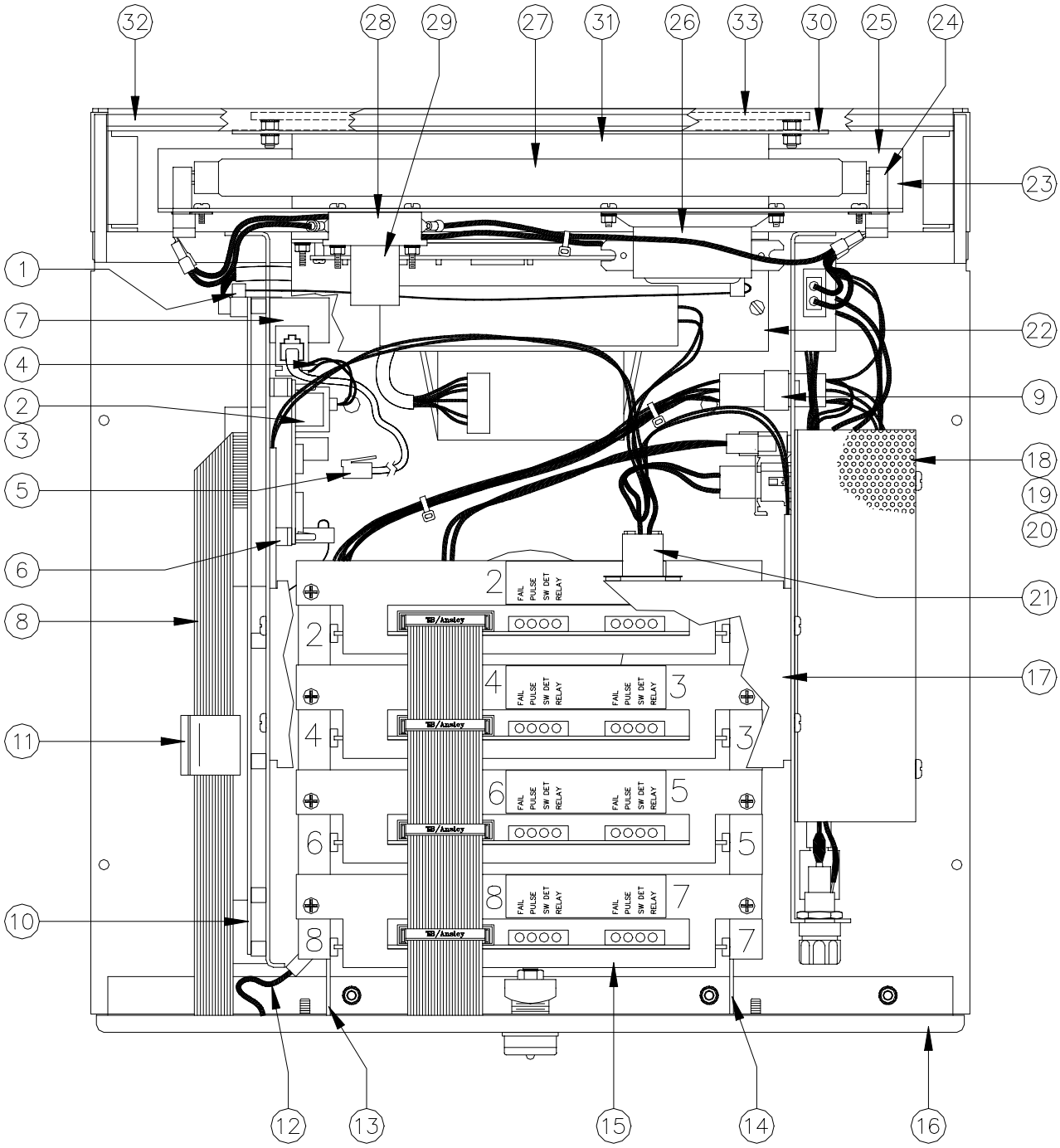
32
28
29
27
31
26
33
30
25
24
23
1
7
4
2
3
5
6
8
11
10
22
9
18
19
20
21
17
12
13
15
14
16
FAIL
PULSE
SW DET
RELAY
Ansley

HEAD - TOP VIEW

Item	Part No.	Description
1	C05708	Cable Assy., Ribbon, LCD Display
2	C05739	Modem Assy., 300/1200 Baud Kit
	*C05738	Cable Assy., 20-position ribbon (Not Shown)
3	*C07122	Modem, Internal 2400
4	*C05737	Cable Assy., Phone Line Jack
5	*C05356	Cable Assy., 4 Conductor Phone Line, 8 Feet
6	*C02896	Support, PCB, 3/8 Long Plastic
7	*C34821	Bracket, Phone Jack (Metal Only)
8	C05722	Cable Assy., Ribbon, PC to MPU, 8 Pumps
	C05766	Cable Assy., Ribbon, PC to MPU, 6 Pumps
	C05767	Cable Assy., Ribbon, PC to MPU, 4 Pumps
	C05768	Cable Assy., Ribbon, PC to MPU, 2 Pumps
9	C05725	Cable Assy., Pump Control Power, 8 Pumps
	C05726	Cable Assy., Pump Control Power, 6 Pumps
	C05727	Cable Assy., Pump Control Power, 4 Pumps
	C05728	Cable Assy., Pump Control Power, 2 Pumps
10	C05676	PCB Assy., MPU
11	C02207	Clamp, Ribbon Cable
12	C05776	Ground Wire Assy.
13	C34729	PCB Support Bracket Assy. (MPU Side-Metal Only)
14	C34733	PCB Support Bracket Assy. (Power Supply Side - Metal Only)
15	C05677	PCB Assy., PCU (PCB and Bracket)
16	C34728	Door Weld Assy. (Metal Only)
17	C34825	Bracket, Wrapper Assy. Support
18	C09053	Power Supply, 50W 5V./12V. (Not Shown)
19	C34769	Cover, Power Supply (Metal Only)
20	C08756	Label, "DANGER, HIGH VOLTAGE" (Not Shown)
21	C05732	Cable Assy., Heaters and Thermostat
22	C34768	Bracket, LCD Heater Mounting
23	C05701	Lamp Bracket Assy.
24	*033393	Lampholder, Fluorescent Miniature
25	*C34752	Bracket, Lamp Fluorescent (Metal Only)
26	*C08692	Ballast, 4 - 6 - 8W.
27	*C08690	Lamp, Fluorescent, F8T5, Miniature
28	*058108	Starter Socket
29	*058109	Starter, Fluorescent
30	C34765	Panel, Display Light Screen (Metal Only)
31	C34136	Window, Illumination (Clear)
32	027146	Gasket, 1/8 x 1/4 x 3 Feet, Long (Order 2 Pieces)
33	C34836	Window, silkscreen display (white)

*Denotes this is a sub-part used in the preceding assembly

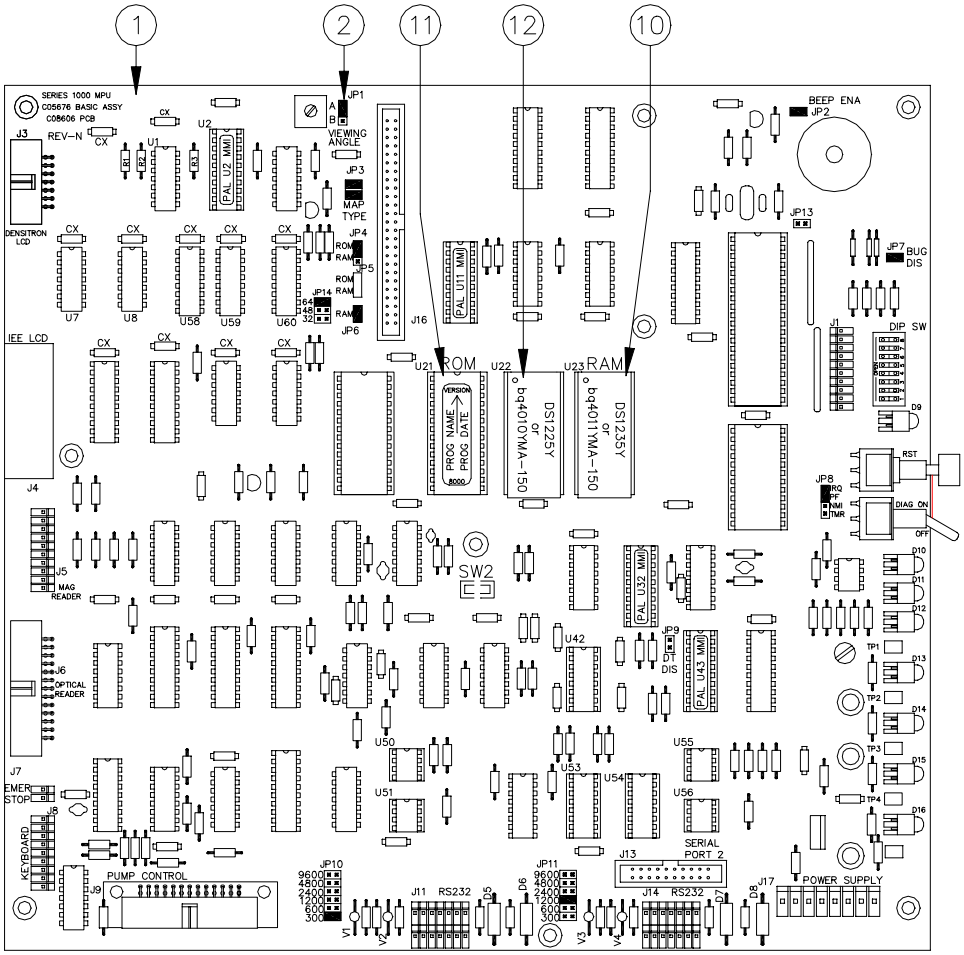
1
2
11
12
10
SERIES 1000 MPU
C05676 BASIC ASSY
C08606 PCB
REV-N
J3
DENSITRON LCD
IEE LCD
J4
J5
MAG READER
J6
OPTICAL READER
J7
EMER STOP
KEYBOARD
J9
PUMP CONTROL
JP1
VIEWING ANGLE
JP3
MAP TYPE
JP4
JP5
JP6
JP14
J16
U21
ROM
U22
RAM
U23
DS1225Y or bq4010YMA-150
DS1235Y or bq4011YMA-150
PROG NAME
PROG DATE
VERSION
SW2
PAL U2 MM
PAL U11 MM
PAL U32 MM
PAL U43 MM
U42
JP9
DT DIS
U50
U51
U53
U54
U55
U56
BEEP ENA
JP2
JP13
JP7
BUG DIS
J1
DIP SW
D9
RST
JP8
DIAG ON
OFF
D10
D11
D12
D13
D14
D15
D16
TP1
TP2
TP3
TP4
J13
SERIAL PORT 2
J17
POWER SUPPLY
JP10
9600
4800
2400
1200
600
300
J11
RS232
D5
D6
JP11
J14
RS232
D7
D8
V1
V2
V3
V4

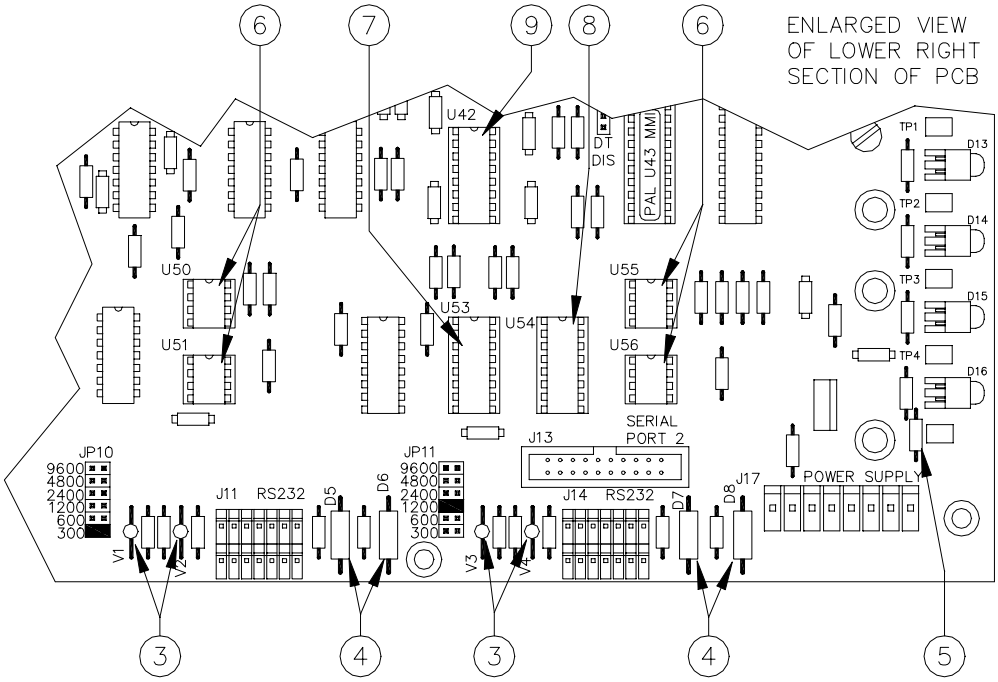
ENLARGED VIEW
OF LOWER RIGHT
SECTION OF PCB
6
7
9
8
6
U42
DT DIS
PAL U43 MM
TP1
D13
TP2
D14
TP3
D15
TP4
D16
U50
U51
U53
U54
U55
U56
SERIAL PORT 2
J13
JP10
9600
4800
2400
1200
600
300
JP11
J11
RS232
D5
D6
J14
RS232
D7
D8
J17
POWER SUPPLY
V1
V2
V3
V4
3
4
3
4
5

MICROPROCESSOR (MPU) PCB

Item	Part No.	Description
1	C05676	PCB Assy., MPU
2	*C03315	Connector, Jumper - 2 Position Female, .100 CL
3	*C08657	Varistor, 56 VDC (Total - 4)
4	*C08512	Transzorb, 8.5 VDC (Total - 4)
5	*C08799	Fuse, 5A., Pico
6	*C02977	IC, 6N138 RS422 opto receiver (Total - 4)
7	*C02268	IC,1489P RS232 receiver
8	*C02267	IC, 1488P RS232 driver
9	*C02978	IC, 26LS30 or 3691 RS422 line driver
10	C08629	IC, RAM - 32K x 8 CMOS, non-volatile(Dallas DS1235Y or Benchmarq bq4011YMA-150)
11	CPK002	Program, Series 1000
12	C08643	IC, RAM - 8K x 8 CMOS, non-volatile (standard versions 8.1 or higher or FleetKey software only)

*Denotes this is a sub-part used in the preceding assembly

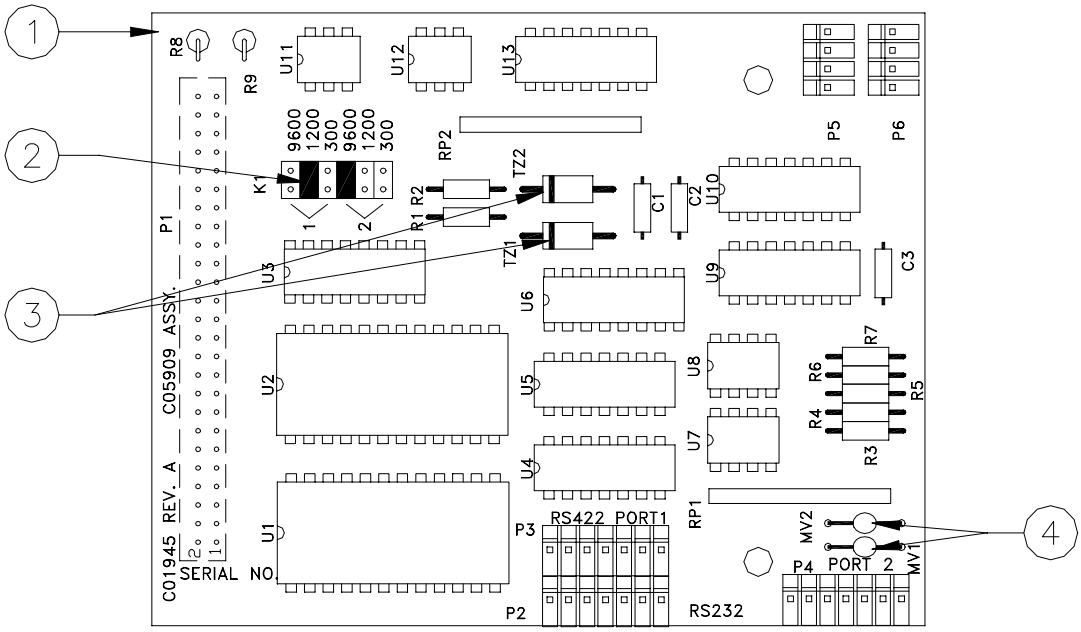
1
2
3
4
R8
R9
U11
U12
U13
9600
1200
300
9600
1200
300
K1
1
2
RP2
TZ2
R2
R1
TZ1
C1
C2
U10
P5
P6
P1
U3
U6
U9
C3
C05909 ASSY.
U2
U5
U8
R7
R6
R5
R4
R3
U7
U4
C01945 REV. A
SERIAL NO.
U1
P3
RS422 PORT1
RP1
MV2
MV1
P4
PORT 2
P2
RS232

AUXILIARY COMMUNICATIONS PORT PCB ASSY.

Item	Part No.	Description
1	C05909	PCB Assy., Auxiliary Communications Port
2	*C03315	Connector, Jumper - 2 position Female, .100CL
3	*C08512	Transzorb, 8.5VDC (Port 1 - Order 2)
4	*C08657	Varistor, 56VDC (Port 1 - Order 2)

*Denotes this is a sub-part used in the preceding assembly

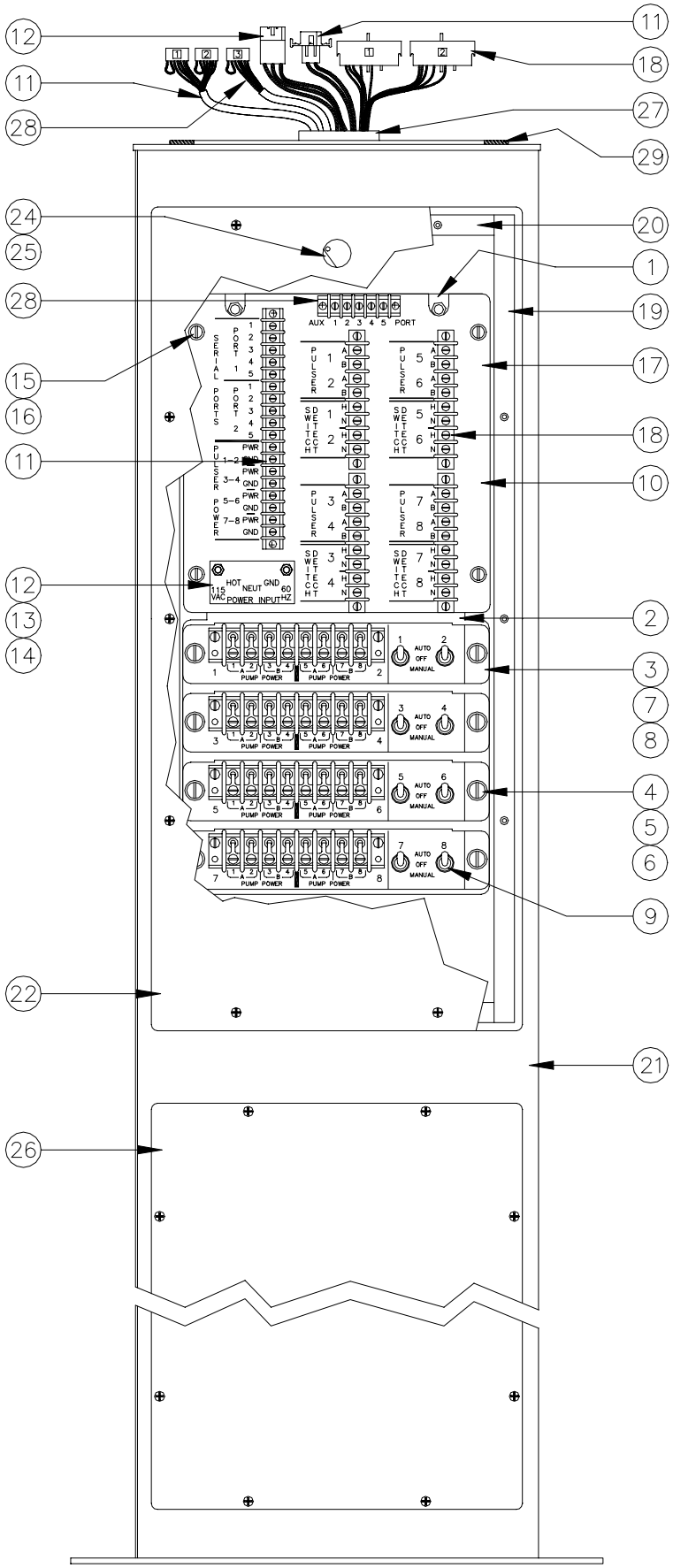
12
11
28
11
18
27
29
24
25
20
1
28
19
15
17
16
18
11
10
12
13
14
2
3
7
8
4
5
6
9
22
21
26
AUX 1 2 3 4 5 PORT
SERIAL PORTS
PORT 1
PORT 2
PULSER POWER
1-2
3-4
5-6
7-8
PWR
GND
PULSER
SWITCH
HOT NEUT GND
115 VAC POWER INPUT 60 HZ
AUTO
OFF
MANUAL
PUMP POWER

CHASSIS IN POST

Item	Part No.	Description
1	C05716	Chassis Assy., 8 Pump (includes parts 2, 3, 10 and subparts)
	C04684	Chassis Assy., 6 Pump (includes parts 2, 3, 10 and subparts)
	C04685	Chassis Assy., 4 Pump (includes parts 2, 3, 10 and subparts)
	C04686	Chassis Assy., 2 Pump (includes parts 2, 3, 10 and subparts)
2	C34618	Bracket Weld Assy., Pedestal Chassis (Metal Only)
3	C05687	Relay Module Assy., 2 Hose Outlets
4	*C03285	Screw, captive slot
5	*C03286	Washer, retaining
6	*C34617	Bracket, dual relay (metal only)
7	*C08746	Relay, solid state, 240VAC/40A. SPST (not shown)
8	*C04477	Relay, solid state, 240VAC/25A. SPST (not shown)
9	*C02064	Switch, DPDT, Center off
10	C05709	Bracket Assy., 8 Pump, Pwr. - Comm. - Pul.
	C04681	Bracket Assy., 6 Pump, Pwr. - Comm. - Pul
	C04682	Bracket Assy., 4 Pump, Pwr. - Comm. - Pul.
	C04683	Bracket Assy., 2 Pump, Pwr. - Comm. - Pul.
11	*C05706	Cable Assy., Serial Ports and Pulser Power
12	*C05713	Cable Assy., AC Power Input
13	*C31922	TB, Cover, 3 - Position (Also Order Item #14)
14	*C08691	Decal, 115 VAC Power Input, Red
15	*C03285	Screw, Captive Slot
16	*C03286	Washer, Retaining
17	*C34751	Bracket Weld Assy., Power and Comm. (Metal Only)
18	*C05689	Cable Assy., Switch Detect - Pulser - PC
19	C34762	Gasket, Punched 3/8 x 1/2 x 24 Long
20	C34763	Gasket, Punched 3/8 x 1/2 x 11 Long
21	C34710	Pedestal Weld Assy. (metal only)
22	C34713	Door weld assy., pedestal access (metal only)
24	035009	Lock and Key
25	0M0049	Cam for lock, pedestal cover (not shown)
26	C34712	Door, base access (metal only)
27	C08307	Bushing, snap-in
28	C05918	Cable assy., aux. comm. - 24"
29	026886	Gasket, 1/8 x 3/8 bulk (order 3 feet)

*Denotes this is a sub-part used in the preceding assembly

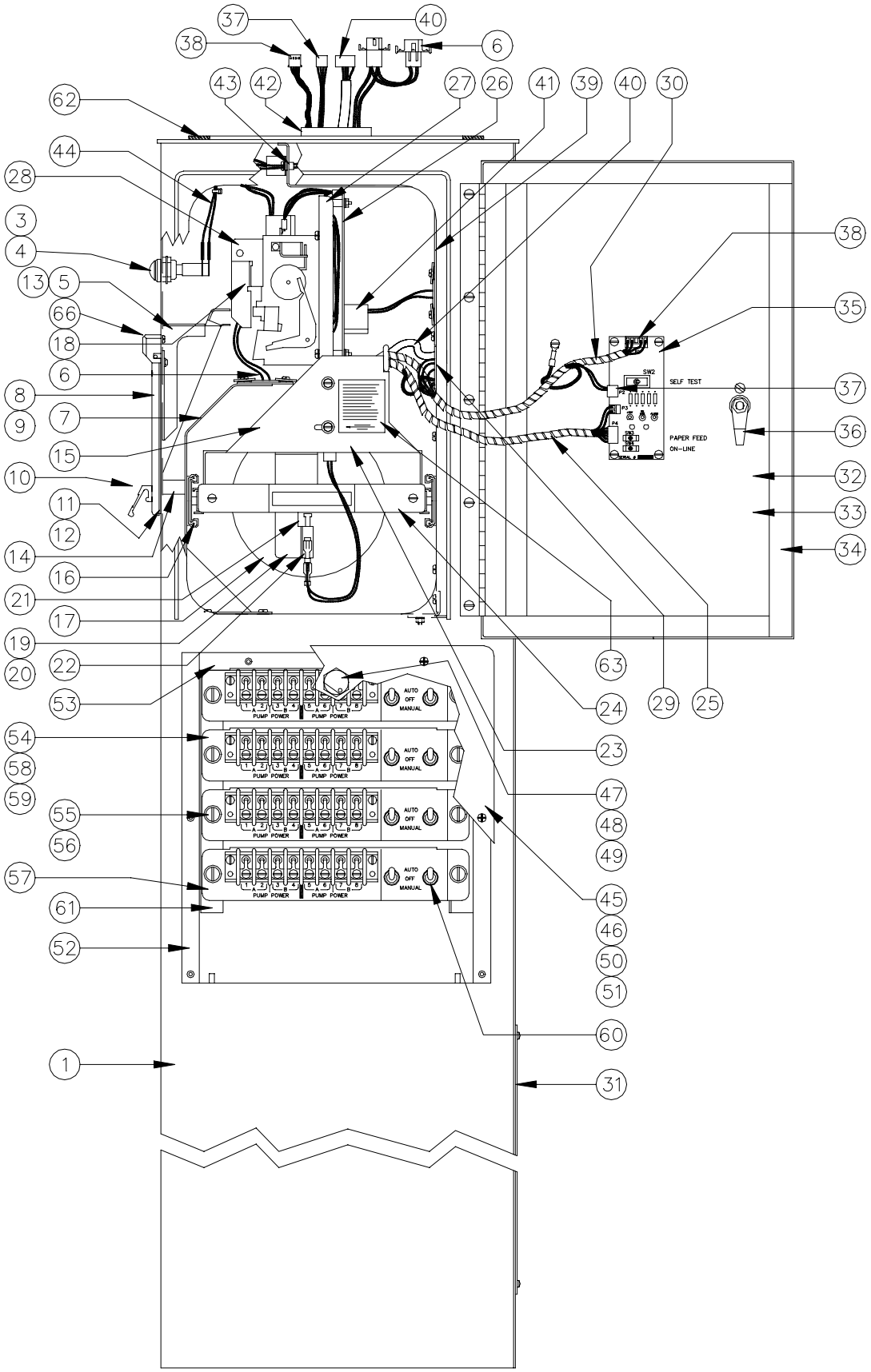
37
40
38
6
43
42
27
26
41
39
40
30
62
44
28
3
4
13
5
66
18
6
8
9
7
15
10
11
12
14
16
21
17
19
20
22
53
54
58
59
55
56
57
61
52
1
38
35
37
36
32
33
34
63
29
25
24
23
47
48
49
45
46
50
51
60
31
SW2
SELF TEST
P2
P3
P4
PAPER FEED
ON-LINE
AUTO
OFF
MANUAL
PUMP POWER
PUMP POWER

PEDESTAL ASSY., SERIES 1000, STAR PRINTER - RIGHT SIDE

Item	Part No.	Description
1	C35367	Pedestal Weld Assy.
3	C08945	Lamp, 44 Miniature Bayonet T-3-1/4 6.3V (Old Style)
4	C09682	LED Indicator (New Style)
5	C34993	Paper Chute Weld Assy.
6	C06086	Cable/Heater Assy.
7	C34981	Bracket Weld Assy., Front Slide
8	C06996	Door Assy., Receipt Access
	NOTE: When ordering item 8, a part number from item 9 must be specified to select the appropriate silkscreen.	
9	Silkscreened Receipt Door	
	*C35124	English card
	*C35295	English cardless
	*C35296	English key
	*C35800	French card
	*C35802	French cardless
	*C35801	French key
10	*C08108	Handle, Pull
11	*C01989	Gasket, 1/2 W x 1/4 T
12	*C34975	Catch Plate
13	C35015	Bracket, Receipt Paper Catch
14	C01741	Mag Catch, Snap-In .43 x 2.56
15	C05672	Printer, Slide Assy.
16		Slide Assy., 12" PR-Modified (Order P/N C05672)
17	*C08946	Paper, #RF - 4.5-5 Low Bulk
18	*C08941	Ribbon, Star Receipt Printer
19	*C34994	Bracket, Paper Support (RH)
20	*C34986	Bracket, Paper Support (LH)
21	*C34970	Roller, Printer Paper Support
22	*C03334	Switch, SPDT Snap Action
23		Bracket, Slide Mount Weld Assy. (Order P/N C05672)
24	*C34984	Bracket, Slide Assy. Shield
25	*C05285	Cable Assy., Paper Low + Printer Control
26	*C08933	PCB, Controller #BD83SNM-12
	*C06007	Cable Assy., 12-pos, 3-7/8 Lg.
	*C06008	Cable Assy., 10-pos, 3-7/8 Lg.
27	*C34987	Bracket, Printer Mounting Weld Assy.
28	*C08932	Printer w/ Paper Cut #DP834CP-12
29	C02827	Bushing, Snap-In 1" ID - Nylon
30	C01985	Cable Spirol Wrap 1/4 O.D. (Subpart of 25 and 44)
31	C33540	Cover, Rear Access 10 x 14
32	C05789	Door Assy., Printer Access
33	*C35012	Door Assy., Printer (Metal Only)
34	*C01990	Gasket, Bulk 5/8 T x 3/4 W Self-Adhesive
35	*C04665	PCB Assy., Printer Power/Test
36	*035004	Lock, Southco
	*035003	Key, Southco (not shown)
37	C05394	Cable Assy., Aux PCB (Subpart of 44)
38	C05395	Cable Assy., Printer Power (Subpart of 44)
39	C34979	Bracket, Printer Heat Shield
40	C06087	Cable Assy., RS-232 Communication
41	C02207	Clamp, Ribbon Cable
42	C08307	Bushing, Snap-In 1.969 ID - Nylon
43	0M0068	Bushing, Snap-In 1/4 ID Nylon
44	C06085	Cable Assy., Printer and Lamps (Combines 30, 37, & 38)
45	C06220	Cover Assy., Pedestal Side Access
46	*C35148	Cover weld assy., pedestal side access (metal only)
47	*035009	Lock and Key
48	*C34753	Cam for lock (not shown)
49	*026799	Gasket, lock (not shown)
50	*027072	Gasket, 1/16 x 3/4 (order 3 feet)
51	*027073	Gasket, 1/16 x 3/4 (order 1 foot)
52	C35175	Gasket, Punched - Vertical
53	C34763	Gasket, Punched - Horizontal
54	C05687	Relay Module Assy., 2 hose outlets
55	*C03285	Screw captive slot
56	*C03286	Washer, retaining
57	*C34617	Bracket, dual relay (metal only)
58	*C08746	Relay, solid state, 240VAC/40A. SPST (not shown)
59	*C04477	Relay, solid state, 240VAC/25A. SPST (not shown)
60	*C02064	Switch DPDT, Center Off
61	C35146	Bracket weld assy., front
62	026886	Gasket, 1/8 x 3/4 bulk (order 3 feet)
63	C08883	Label, Star Printer Maintenance (Subpart of 16)
64	C01452	Decal, Paper Feed, Star (not shown; subpart of 32)
65	C08847	Decal, Brd Status, Star (not shown; subpart of 32)
66	C35128	Receipt Printer Door HInge

*Denotes this is a subpart used in the preceding assembly

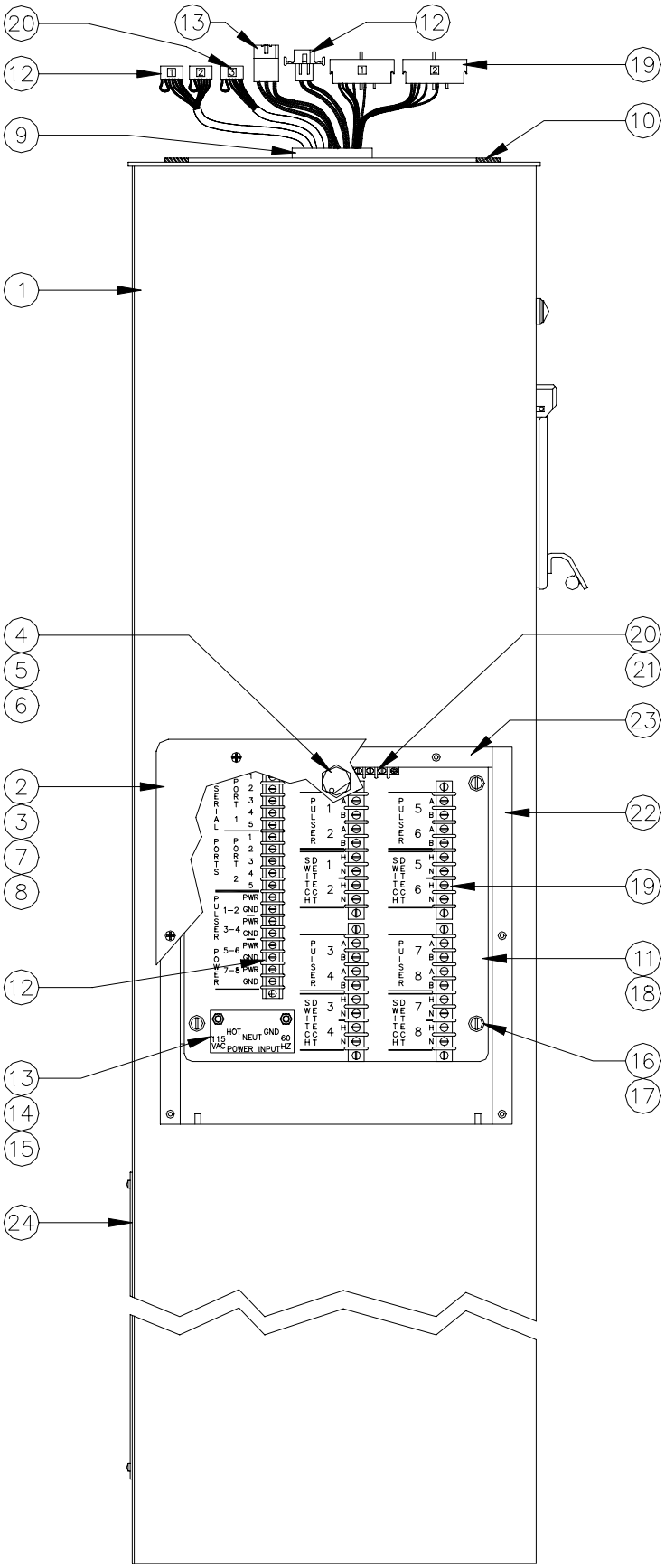
20
13
12
12
19
9
10
1
4
5
6
20
21
23
2
3
7
8
22
19
12
11
18
13
14
15
16
17
24
SERIAL PORTS
PORT 1
PORT 2
PULSER POWER
1-2
3-4
5-6
7-8
PWR
GND
PULSER 1
PULSER 2
PULSER 3
PULSER 4
PULSER 5
PULSER 6
PULSER 7
PULSER 8
SDWITCH 1
SDWITCH 2
SDWITCH 3
SDWITCH 4
SDWITCH 5
SDWITCH 6
SDWITCH 7
SDWITCH 8
HOT
NEUT
GND
115 VAC
60 HZ
POWER INPUT

PEDESTAL ASSY., SERIES 1000, STAR PRINTER - LEFT SIDE

Item	Part No.	Description
1	C35367	Pedestal Weld Assy.
2	C06220	Cover assy., pedestal side access
3	*C35148	Cover weld assy. pedestal side access (metal only)
4	*035009	Lock and key
5	*C34753	Cam for lock
6	*026799	Gasket, lock
7	*027072	Gasket, 1/16 x 3/4 (order 3 feet)
8	*027073	Gasket, 1/16 x 1/4 (order 1 foot)
9	C08307	Bushing, snap-in, 1.969 ID - nylon
10	026886	Gasket 1/8 x 3/4 bulk (order 3 feet)
11	Bracket Assy.	
	C05955	8 pump, pwr. - comm.- pulser
	C05956	6 pump, pwr. - comm.- pulser
	C05957	4 pump, pwr. - comm.- pulser
	C05958	2 pump, pwr. - comm.- pulser
12	*C06089	Cable assy., serial ports and pulser power
13	*C06088	Cable assy., AC power input
14	*C31922	TB, cover, 3-position (also order item #15)
15	*C08691	Decal, 115 VAC power input, red
16	*C03285	Screw, captive slot
17	*C03286	Washer, retaining
18	*C35264	Bracket weld assy., power and comm (metal only)
19	*C06091	Cable assy., switch detect, - pulser - PC
20	*C06090	Cable assy., aux comm.
21	*C35264	Bracket assy., aux. TB
22	C35175	Gasket, punched, vertical
23	C34763	Gasket, punched, horizontal
24	C33540	Cover, rear access 10 x 14

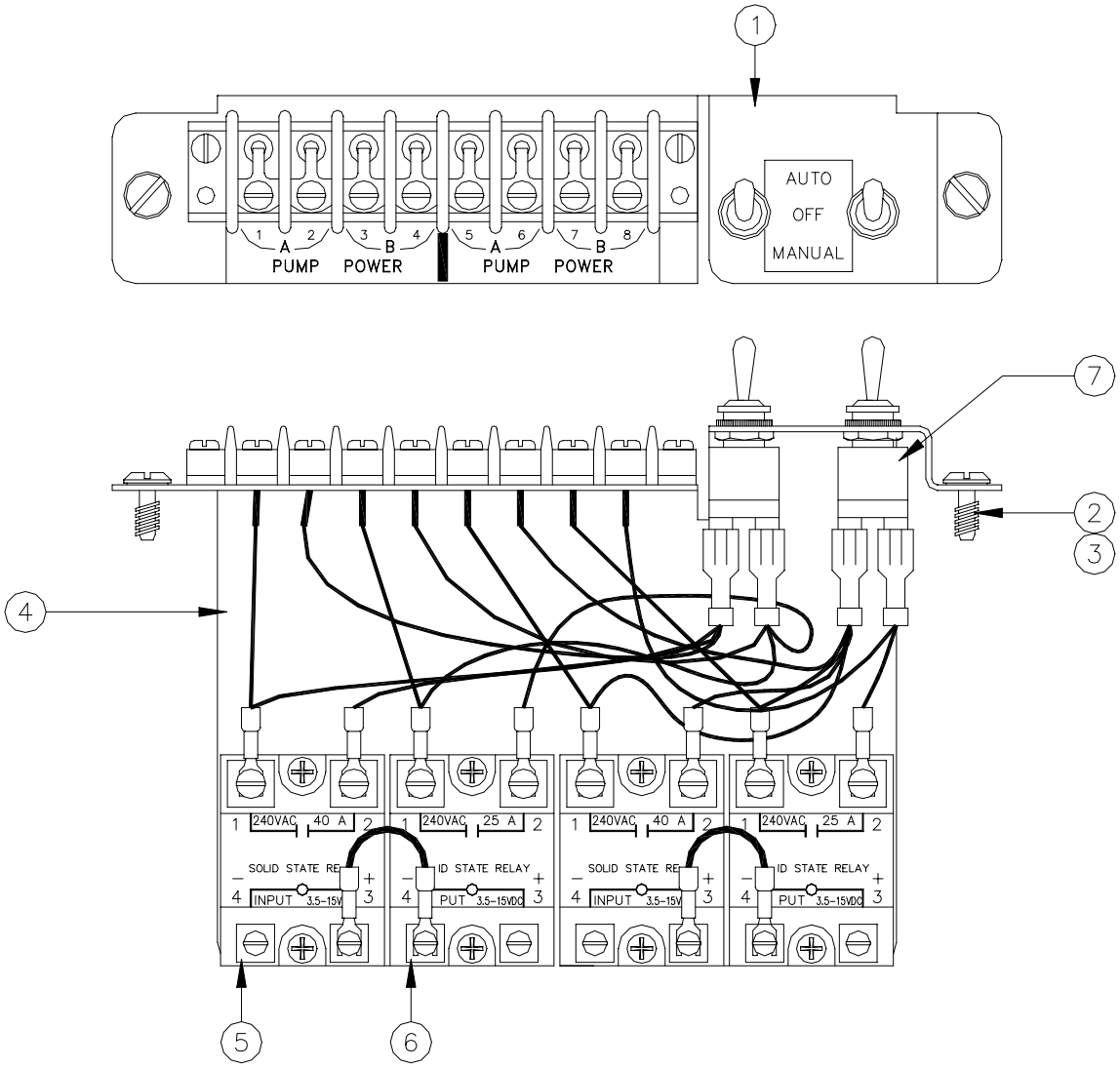
1
AUTO
OFF
MANUAL
1 2 3 4 5 6 7 8
A B A B
PUMP POWER PUMP POWER
7
2
3
4
240VAC 40 A
240VAC 25 A
SOLID STATE RELAY
INPUT 3.5-15V
PUT 3.5-15VDC
5
6

RELAY MODULE ASSY.

Item	Part No.	Description
1	C05687	Relay Module Assy., 2 Hose Outlets
2	*C03285	Screw, Captive Slot
3	*C03286	Washer, Retaining
4	*C34617	Bracket, Dual Relay (Metal Only)
5	*C08746	Relay, Solid State, 240VAC/40A. SPST
6	*C04477	Relay, Solid State, 240VAC/25A. SPST
7	*C02064	Switch, DPDT, Center Off

*Denotes this is a sub-part used in the preceding assembly

WARRANTY

General Statements:

Gasboy International LLC warrants all new equipment manufactured by Gasboy against defective material and/or workmanship, for the warranty period specified below, when the equipment is installed in accordance with specifications prepared by Gasboy.

This warranty does not cover damage caused by accident, abuse, Acts of God, lack of surveillance of automatic recording systems, negligence, mis-application, faulty installation, improper or unauthorized maintenance, installation or use in violation of product manuals, instructions, or warnings.

Under no circumstance shall Gasboy be liable for any indirect, special, or consequential damages, losses, or expenses to include, but not limited to, loss of product, loss of profits, litigation fees, or the use, or inability to use, our product for any for any purpose whatsoever.

Parts Only - During the warranty period, Gasboy will, at its option, repair or replace defective parts returned transportation prepaid to its factory.

On-Site Labor Included - Gasboy will also provide, within the Continental United States and during the warranty period, the services of an Authorized Service Representative (ASR) for on-site repair or replacement of defective parts.

Replacement Parts - Any system components that are not part of the original system order, including Island Card Readers, Pump Control Units, etc., are considered replacement parts.

Equipment	Term	Coverage
Commercial Pumps and Dispensers Full-Cabinet Consumer Pumps	One year from date of installation or 18 mos. from date of Gasboy International's invoice to the purchaser, whichever comes first.	Parts and Labor.
Small Transfer Pumps, Meters, Pressure Regulators	One year from date of installation or 18 mos. from date of Gasboy International's invoice to the purchaser, whichever comes first.- Excepting the Model 2020 Hand Pump, which has a 90-day warranty from date of GASBOY International's invoice.	Parts Only.
Keytrol	One year from date of installation or 18 mos. from date of Gasboy International's invoice to the purchaser, whichever comes first.	Parts and Labor.
Fuel Management Systems: - CFN/ Profit Point - Series 1000/Fleetkey - TopKAT - Fuel Point Readers (sold with new systems)	One year from date of start-up or 15 mos. from date of Gasboy International's invoice to the purchaser, whichever comes first.- The basic warranty only applies to systems which have been started up by a Gasboy Authorized Service Representative (ASR).	Parts and Labor.
Additional Fuel Point Items: - Fuel Point Readers sold for retrofitting existing systems. - Fuel Point vehicle and dispenser components.	One year from date of start-up or 15 mos. from date of Gasboy International's invoice to the purchaser, whichever comes first.	Parts Only.
Encoders, Embossers, Modems, CRTs, and Logger Printers	Purchased with Fuel Management System (Encoders, Embossers only): 90 days from the date of start-up by a Gasboy ASR, or 180 days from date of Gasboy International's invoice, whichever occurs first. Purchased with Fuel Management System (Modems, CRTs, and Logger Printers only): Matches system warranty. Purchased Separately: 90 days from date of Gasboy International's invoice to the purchaser.	Purchased with System (Encoders, Embossers only): Parts only. Purchased with System (Modems, CRTs, Logger Printers only): Matches system warranty. Purchased Separately: Parts Only.
Air Diaphragm Pumps	Three years from date of purchase (for full warranty description, see Price List).	Parts Only.
Items not manufactured by Gasboy (ex. automatic nozzles, hoses, swivels, etc.)	Not warranted by Gasboy International (consult original manufacturer's warranty).	Not Applicable.
Replacement Parts	One year from date of Gasboy International's invoice to the purchaser.	Parts Only.

To the extent permitted by law, this warranty is made in lieu of all other warranties, expressed or implied, including warranties of freedom from patent infringement, or merchantability, or fitness for a particular purpose, or arising from a course of dealing or usage of trade. No one is authorized to vary the terms of the warranty nor may anyone make any warranty of representation, or assume any liability other than that herein stated, in connection with the sale described herein. The acceptance of any order by Gasboy International is expressly made subject to the purchaser's agreement to these conditions.

GASBOY

GASBOY INTERNATIONAL LLC

P.O. Box 309, Lansdale, PA 19446 ● (800) 444-5579 ● FAX: (800) 444-5569 ● www.gasboy.com