Site Preparation and Installation Instructions

Volumetric Line Leak Detection System for Pumps with 2” Discharge

For TLS-350 and TLS-350R Systems

Manual Number 576013-873, Revision D

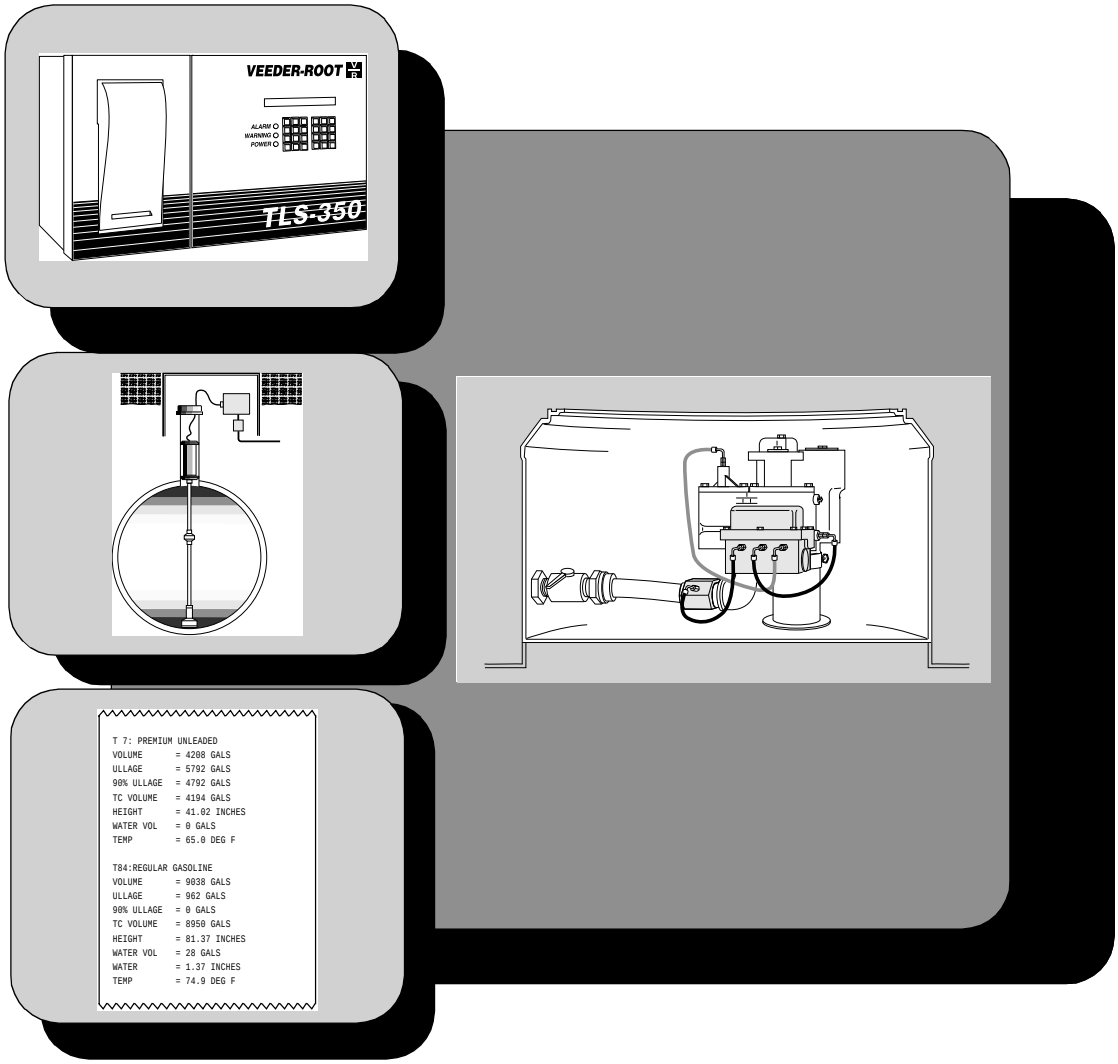

VEEDER-ROOT
Environmental Products

Notice

Veeder-Root makes no warranty of any kind with regard to this publication, including, but not limited to, the implied warranties of merchantability and fitness for a particular purpose.

Veeder-Root shall not be liable for errors contained herein or for incidental or consequential damages in connection with the furnishing, performance, or use of this publication.

This publication contains proprietary information which is protected by copyright. All rights reserved. No part of this publication may be photocopied, reproduced, or translated to another language without the prior written consent of Veeder-Root.

The information contained in this publication is subject to change without notice.

577013-338, Revision D

© Veeder-Root 1997. All rights reserved.

Reader Comment Card

Please take a moment to review this manual. Your comments will help us improve our manuals. *Thank you!*

Please circle one number for each.	**Strongly Agree**	**Agree**	**Neutral**	**Disagree**	**Strongly Disagree**
This manual contains the information I need.	5	4	3	2	1
This manual is well organized.	5	4	3	2	1
Layout and format of the manual make it easy to use.	5	4	3	2	1
Instructions are easy to understand.	5	4	3	2	1
Instructions are complete.	5	4	3	2	1
Illustrations are clear and helpful.	5	4	3	2	1
There are enough illustrations.	5	4	3	2	1
Manual meets my expectations.	5	4	3	2	1
Things I would like to see added:					
Write additional comments. Please be specific.					

Manual Title	Manual Part No.
Your Name	Your Title
Company	
Address	
City/State/Zip	Phone

Mail to:

Technical Publications Dept.
Veeder-Root
P.O. Box 2003
Simsbury, CT 06070-7684

Or fax to:

(860) 651-2719
Attn: Technical Publications Dept.

Veeder-Root Support

Calling for Help

Please use these telephone numbers when you need help:

Customer Service	
Orders, accessories and supplies, customer support assistance, nearest authorized Veeder-Root distributor	800-873-3313 800-234-5350
Monday - Friday, 8 a.m. - 6 p.m. Eastern Standard Time	

Product Information	
Literature requests Sales applications information Technical applications information	800-873-3313 800-234-5350
Monday - Friday, 8 a.m. - 4:30 p.m. Eastern Standard Time	

Technical Support (for Authorized Contractors only)	
Technical Service	860-651-2753
Monday - Friday, 8 a.m. - 7 p.m. Eastern Standard Time	

Contents

Veeder-Root Support

Calling for Help i

Introduction

Safety Symbols 1
Warnings and Important Notes 3
Safeguarding Existing System Data 4
VLLD System Contents 4
Additional Requirements 5
VLLD Operation with an FE Petro Variable Speed Pump 6
    VLLD Operation with an FE Petro Variable Speed Pump System..... 6

Preparing the Site

Manholes 9
Pump Riser Pipe 9
Submersible Pump 9
Stage II Vapor Recovery 9
Piping Runs 10
Vertical Rise of Pipeline 10

Installing Conduit

Safety Warnings 11
Conduit Run Guidelines 12
Conduit Between Console and Pump Relay Control Box 13
Conduit Between the Console and Submersible Pump Manhole 14
Conduit Between the VLLD Controller and Junction Box 15
Thermistor Conduit 15
    Installing Conduit at Newly Excavated Sites..... 15
    New Installation: Method #1..... 16
    New Installation: Method #2..... 16
    Installing Conduit at Existing Sites..... 16

Installing VLLD Controller and Thermistor Junction Box

Safety Warnings 17
Requirements 18

Installing Field Wiring

Safety Warnings 19
Notes to System Wiring Diagram 20

VLLD Controller Field Wiring Installation 20
Pump Control Field Wiring Installation 24
Thermistor Field Wiring Installation 24
Installation in Existing Probe or Sensor Conduit or New Installation: Method #1 24
New Installation: Method #2 24

Installing the System

Safety Warnings 25
Pump Port Strainer Installation 26
Tank Port Fitting Installation 27
Pressure Port Fitting Installation 27
Thermistor Installation 27
Turn Off Power 28
Pull Cord Installation 28
Installation Into a Sealed-End, Dedicated Conduit 29
VLLD Check Valve Installation 29
Preparing Existing Systems 29
Installing the Check Valve 32
Replacement Procedure 33
Manifolded Product Lines VLLD Installation 37
VLLD Controller Installation 41
Flexible Fuel Control Line Installation 43

Connecting the Wiring

Safety Warnings 45
General Wiring Practices 46
VLLD Interface Module Wiring Connections 46
VLLD Controller Field Wiring Connections 47
Thermistor Interface Module Wiring Connections 51
Thermistor Field Wiring Connections 51
Pump Control Wiring 53

Checking the System

WARNING Tags 57
Plumbing Checkout 57
Volumetric Line Leak Detector Checkout Procedure 58
Purging the VLLD Controller 59
Testing the VLLD System 60
Testing the Piping System 60

Warranty Conditions and Limitations of Liability

Limitations Of Liability 63
Inspection 63
Limitation of Remedy and Warranty 63

Limitation of Damages 64
Limitation of Actions 64
Collateral Promises 64
Interpretation 64

Figures

Figure 1. Dip Switch SW2 and Rotary Switch in Adjustable Frequency Drive 7
Figure 2. TLS-350/TLS-350R System Wiring Diagram 22
Figure 3. Strainer and Tank Port Fitting Installation (Red Jacket Pump) 26
Figure 4. Temperature Thermistor 28
Figure 5. Typical Red Jacket VLLD Installation (side view, horizontal check valve mount) 30
Figure 6. Typical Red Jacket VLLD Installation (top view, horizontal check valve mount) 31
Figure 7. Typical FE Petro VLLD Installation (side view, horizontal check valve mount) 31
Figure 8. Incorrect Piping Method 33
Figure 9. Top View of Older Two Port Check Valve. 34
Figure 10. Side View of Older Two Line Check Valve. 35
Figure 11. Top View of One Port Check Valve and Adapter Replacement for Old Two Port Check Valve. 36
Figure 12. Top View of Old and New One Line Check Valve. 36
Figure 13. Manifolded Product Lines VLLD Installation— Dual Tanks/Dual Pumps 39
Figure 14. Manifolded Product Lines VLLD Installation— Wiring Diagram 40
Figure 15. Controller with Grommet Installed 42
Figure 16. Epoxy Sealant Connections 48
Figure 17. VLLD and Pump Control Diagram for Red Jacket, Gilbarco, or Equivalent STP Control Box 49
Figure 18. VLLD and Pump Control Diagram for Non-Red-Jacket Relay Control Box 50
Figure 19. Thermistor Interface Module Wiring Diagram 52
Figure 20. Thermistor Field Wiring Diagram 52
Figure 21. Manifolded Product Lines VLLD Wiring Diagram- Single Tank/Dual Pumps 55
Figure 22. WARNING Tag 57

Introduction

This manual describes installation procedures for the Volumetric Line Leak Detection (VLLD) System, Part Number 847590-001 in a TLS-350 or TLS-350R System designed and manufactured for Veeder-Root.

Safety Symbols

The following safety symbols may be used throughout this manual to alert you to important safety hazards and precautions.

Explosive
Fuels and their vapors are extremely explosive if ignited.

Flammable
Fuels and their vapors are extremely flammable.

Electricity
High voltage exists in, and is supplied to, the device. A potential shock hazard exists.

Turn Power Off
Live power to a device creates a potential shock hazard. Always turn power off to the device and associated accessories when servicing the unit.

No Smoking
Sparks and embers from burning cigarettes or pipes can ignite fuels and their vapors

No Open Flames
Open flames from matches, lighters, welding torches, etc. can ignite fuels and their vapors.

No Power Tools
Sparks from power tools (such as drills) can ignite fuels and their vapors.

No Vehicles
Moving vehicles in the area during service can create a potential for personal injury to you or others. Sparks from starting vehicles can ignite fuels and their vapors

Vehicular Danger

Serious injury or death could result if you are struck by a vehicle.

No People in the Area

Unauthorized people in the area during service can create a potential for personal injury to you and them.

Use Safety Barricades

Unauthorized people or vehicles in the work area are dangerous. Always use safety cones or barricades, safety tape, and your vehicle to block the work area.

Wear Eye Protection

Fuel spray from residual pressure in the lines can cause serious eye injuries. Always wear eye protection.

Injury

Careless or improper handling of materials can result in bodily injury.

Gloves

Wear gloves to protect hands from irritation or injury.

Read All Related Manuals

Knowledge of all related procedures before you begin work is important. Read and understand all manuals thoroughly. If you do not understand a procedure, ask someone who does.

Warnings and Important Notes

⚠ WARNING

This product is to be installed in systems operating near locations where highly combustible fuels or vapors may be present.

Fire or explosion resulting in serious injury or death could result if the equipment is improperly installed or modified. Serious contamination of the environment may also occur.

1. **Read and follow all instructions in this manual, including all safety warnings.**
2. **Comply with all applicable codes including: the National Electrical Code; federal, state, and local codes; and other applicable safety codes.**
3. **Do not alter or modify any component or substitute components in this kit.**
4. **Do not use this component for other systems aside from the TLS-350 or TLS-350R. Install only as described in this manual.**
5. **Do not share wiring conduit for the Volumetric Line Leak Detection (VLLD) system controller with wiring from intrinsically safe devices such as probes, sensors, and thermistors.**
6. **Ensure that conduit enters the TLS-350 or TLS-350R console through the proper preformed knockouts. See wiring diagram and field wiring instructions for detailed information.**

⚠ WARNING

You are working in an area where vehicle traffic may occur.

Serious injury or death could result if you are struck by a vehicle.

To protect yourself and others from being struck by vehicles, block off your work area during installation or service.

⚠ WARNING

This device is installed in equipment where potentially lethal voltages may exist.

Electrical shock resulting in serious injury or death may result if power is on during installation and the device is improperly installed.

Before installing this device, turn off power to the system, including console and submersible pumps.

Important ☞ *Failure to install this product in accordance with its instructions and warnings will result in voiding of all warranties connected with this product.*

To help ensure proper installation and unit performance, we recommend that a Veeder-Root Authorized Service Contractor install this equipment.

Safeguarding Existing System Data

At existing sites where a TLS-350 or TLS-350R is already in operation, you will be asked, for personal and equipment safety reasons, to turn OFF the TLS-350 or TLS-350R system before beginning any installation procedures for the Line Leak Detector.

Important ☞ ***BEFORE YOU TURN OFF POWER TO THE TLS-350 or TLS-350R CONSOLE...***

Be sure to print out or record all setup data which has been entered into the system and all alarm history and last leak test data which has been stored by the system. In addition, check to be sure that the Battery Backup Switch is in the ON position. If the Battery Backup Switch is OFF, all inventory, leak test, setup and alarm history data WILL BE LOST when AC power to the system is turned OFF.

Refer to the TLS-350 or TLS-350R "System Setup Instructions" manual for information on activating the Battery Backup feature.

Refer to the TLS-350 or TLS-350R "System Operating Instructions" manual for instructions on viewing and printing inventory, leak test, setup and alarm history data.

VLLD System Contents

The VLLD System, Part No. 847590-001, contains the following:

- ❑ 1 - Mounting Bracket Assembly
- ❑ 1 - VLLD Controller
- ❑ 1 - VLLD Check Valve
- ❑ 3 - Flexible Fuel Control Lines
- ❑ 1 - Pump Port Strainer

- ❑ 2 - Port Fittings
- ❑ 10 - “WARNING” Tags
- ❑ Epoxy Packs and Wire Nuts
- ❑ Site Preparation and Installation Manual

Additional Requirements

Important ☞ *The TLS-350 or TLS-350R console must have certain interface modules installed to accept inputs from a VLLD System and temperature thermistor (if present).*

TLS-350 or TLS-350R Version 4 and higher software can perform line leak testing without requiring that in-tank probes and the ground thermistor be present. All prior software versions use the probes and thermistor to determine a “wait time” for thermal stability before initiating line leak testing.

Beginning with Version 5, the wait time mode is programmable in the TLS-350 or TLS-350R Setup mode under the heading “Wait Mode”. The traditional wait mode using thermistor and probe temperature readings is labelled “Temp. Meas.” mode. The new mode is labelled “Vol Chg. Meas.” mode. Refer to the TLS-350 or TLS-350R System Setup Instructions for detailed instructions on changing this selection, if required (the system defaults to the “Temp. Meas.” mode).

Use of the “Vol. Chg. Meas.” mode is only recommended in sites where it is required, since using this mode may reduce the frequency of the line tests. Sites requiring “Vol. Chg. Meas.” include:

- ❑ Sites that do not have in-tank probes.
- ❑ Sites with pipelines exceeding 500 feet of 2-inch diameter pipe (or 225 feet of 3-inch pipe).

For “Temp. Meas.” mode, the TLS-350 or TLS-350R system must have an in-tank probe installed in each tank and a Four-Probe/Thermistor Interface Module, Part No. 847490-104, installed in the Intrinsically Safe Area of the console. For each VLLD, one VLLD Interface Module, Part No. 847490-202, must be installed in the Power Area. These are required to interface a VLLD System to the TLS-350 or TLS-350R console.

Make sure the system is configured with this equipment before proceeding with the VLLD System installation. In addition, one Thermistor (Part Number 576010-856) is required per site (not one per VLLD System). For the “Vol. Chg. Meas.” mode (that is, sites not equipped with in-tank probes), the Four-Probe Module and Thermistor is not required.

VLLD Operation with an FE Petro Variable Speed Pump

VLLD Operation with an FE Petro Variable Speed Pump System

The FE Petro Variable Speed Pump System contains a submersible pump and adjustable frequency drive. For satisfactory operation with the VLLD System, you need to ensure the Dip Switch (SW2) settings in the adjustable frequency drive are set as shown in Table 1.

IST-VFC Software Version 1.1 and 1.2

The settings and positions depend on the software version of the FE Petro IST-VFC (Intelligent Submersible Turbine-Variable Speed Controller). To determine the software version of the IST-VFC, remove its cover and check the label on the FE Petro chip, which is on the printed circuit board. The instructions below are for version 1.1 and 1.2 of the IST-VFC.

Dip Switch SW2

Pole 1 on dip switch SW2 [Figure 1 on page 7] controls the pump start up time. Set this switch to ON. Pole 2 does not affect VLLD operation; it sets the product type for the IST-VFC.

Table 1. Dip Switch (SW2) Settings

Pole 1	Pole 2
ON	ON-gasoline OFF-diesel

Rotary Switch

The rotary switch [Figure 1] controls the pump pressure of the submersible pump. The VLLD System will function at any setting.

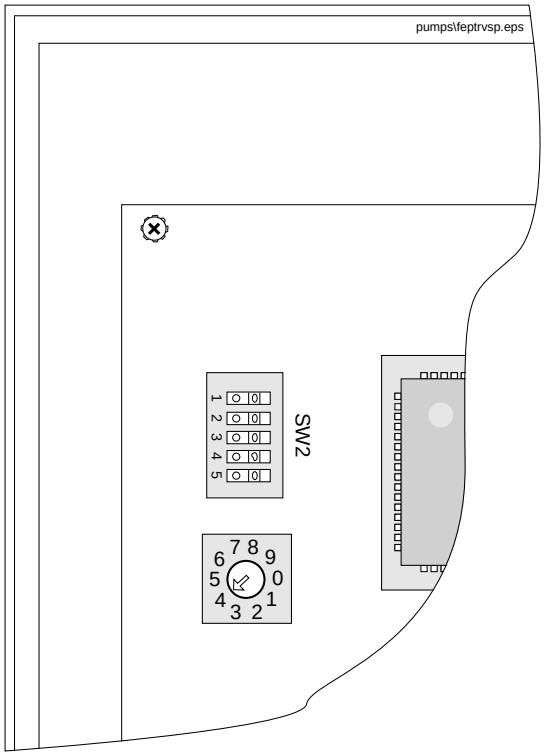

Figure 1. Dip Switch SW2 and Rotary Switch in Adjustable Frequency Drive

Preparing the Site

Manholes

The recommended manhole size for installation of the VLLD System on a submersible pump is 36-inches or larger.

If it is necessary to accommodate smaller existing manholes, the check valve can be oriented vertically or at any angle. See Figure 5 on page 31, Figure 6 on page 32, and Figure 7 on page 32 for typical horizontal installations.

Pump Riser Pipe

There must be at least 2-inch clearance between the bottom of the pump and the top of the tank to provide room for the VLLD controller mounting bracket.

Submersible Pump

For proper system operation, submersible pump H.P. must not exceed 1½ H.P. The pump must have a fully operational check valve/functional element.

Stage II Vapor Recovery

If a Stage II Vapor Recovery system that includes a device in the pressurized piping is installed, contact Veeder-Root for proper installation procedures.

Piping Runs

Where piping runs have been installed for future use, but are connected to the active piping system, you must isolate the inactive lines from the active lines using a shutoff valve. Failure to do so may cause erratic system performance. Piping runs should be installed so as to prevent entrapped air in the piping system.

Vertical Rise of Pipeline

The total vertical rise of the pipeline must not exceed 8 feet above the VLLD Controller, if pumpside leak testing is required.

Installing Conduit

Safety Warnings

WARNING

This product is to be installed in systems operating near locations where highly combustible fuels or vapors may be present.

Fire or explosion resulting in serious injury or death could result if the equipment is improperly installed or modified. Serious contamination of the environment may also occur.

1. **Read and follow all instructions in this manual, including all safety warnings.**
2. **Comply with all applicable codes including: the National Electrical Code; federal, state, and local codes; and other applicable safety codes.**
3. **Do not alter or modify any component or substitute components in this kit.**
4. **Do not use this component for other systems aside from the TLS-350 or TLS-350R. Install only as described in this manual.**
5. **Do not share wiring conduit for the Volumetric Line Leak Detection (VLLD) system controller with wiring from intrinsically safe devices such as probes, sensors, and thermistors.**
6. **Ensure that conduit enters the TLS-350 or TLS-350R console through the proper preformed knockouts. See wiring diagram and field wiring instructions for detailed information.**

WARNING

You are working in an area where vehicle traffic may occur.

Serious injury or death could result if you are struck by a vehicle.

To protect yourself and others from being struck by vehicles, block off your work area during installation or service.

⚠ WARNING

This device is installed in equipment where potentially lethal voltages may exist.

Electrical shock resulting in serious injury or death may result if power is on during installation and the device is improperly installed.

Before installing this device, turn off power to the system, including console and submersible pumps.

Conduit Run Guidelines

Prior planning of conduit runs can save time and costs when installing a VLLD System in new installations or at sites where submersible pump conduit and TLS-350 or TLS-350R probe conduit already exists.

VLLD Controller wiring from the TLS-350 or TLS-350R console to the submersible pump manhole can share the same conduit with pump wiring.

Important ☞ *It is recommended for ease of installation that in place of individual wires, you use Veeder-Root VLLD Field Wiring Cable:*
8-conductor: 330221-001 (250 feet) or 330221-002 (500 feet)
11-conductor: 330221-101 (250 feet) or 330221-102 (500 feet)

In new installations, consider running a single conduit large enough to accept the eight VLLD controller wires and the required number of pump wires between the submersible pump controller box and the junction box in the submersible manhole.

At existing sites, check to see if existing submersible pump conduit is large enough to accept the eight VLLD controller wires. Be sure to comply with the National Electrical Code and any other applicable codes when determining conduit capacity.

⚠ WARNING

VLLD controller wiring is not intrinsically safe.

Explosion or fire could occur if the Volumetric Line Leak Detection (VLLD) system controller is not properly wired.

1. **Read and follow all instructions in this manual, including all safety warnings.**
2. **Do not share wiring conduit for the Volumetric Line Leak Detection (VLLD) system controller with wiring from intrinsically safe devices such as probes, sensors, and thermistors.**
3. **Ensure that conduit enters the TLS-350 or TLS-350R console through the proper preformed knockouts. See wiring diagram and field wiring instructions for detailed information.**

The thermistor can be installed in probe conduit at existing sites, although a separate dedicated thermistor conduit, located as described under “Thermistor Conduit” on page 15, is preferred.

Conduit must be run from:

- ❑ The power area of the TLS-350 or TLS-350R console to the Submersible Pump Relay Control Box(es)
- ❑ The power area of the TLS-350 or TLS-350R console to the submersible pump manhole
- ❑ The intrinsically safe area of the TLS-350 or TLS-350R console to the thermistor junction box in the submersible pump manhole (except when “Vol. Chg. Meas.” is programmed. See “Additional Requirements” on page 5.)
- ❑ The VLLD controller junction box to the VLLD controller.

Knockouts for ¾-inch, 1-inch or 1¼-inch conduit are provided in the console. Consider the number of wires entering the console when deciding on the size and number of conduits required, and design the layout to best suit the requirements of the site. The design must conform to the National Electrical Code and all other applicable state and local codes.

Conduit Between Console and Pump Relay Control Box

Run conduit from the power area of the TLS-350 or TLS-350R console to the submersible pump relay control box. The conduit must be large enough to accommodate three (3) #14 AWG wires for each VLLD System being installed.

Important ☞ *If VLLD controller wires and pump wires are to share the same conduit between the submersible pump relay control box and pump manhole, be sure the conduit from the*

TLS-350 or TLS-350R console to the submersible pump relay control box is large enough to accommodate eleven wires for each VLLD being installed.

Conduit Between the Console and Submersible Pump Manhole

Wiring from the TLS-350 or TLS-350R console to the VLLD controller can share conduit with wiring from the submersible pump relay control box to the submersible pump. If room exists in this conduit, the cost and time of installing new conduit to the manhole can be eliminated.

The pump conduit must have room for the eight #18 AWG wires required by the VLLD controller.

WARNING

VLLD controller wiring is not intrinsically safe.

Explosion or fire could occur if the Volumetric Line Leak Detection (VLLD) system controller is not properly wired.

1. **Read and follow all instructions in this manual, including all safety warnings.**
2. **Do not share wiring conduit for the Volumetric Line Leak Detection (VLLD) system controller with wiring from intrinsically safe devices such as probes, sensors, and thermistors.**
3. **Ensure that conduit enters the TLS-350 or TLS-350R console through the proper preformed knockouts. See wiring diagram and field wiring instructions for detailed information.**

If there is enough room in the existing pump conduit to accommodate VLLD controller wiring, branch off the pump conduit in the manhole to provide for conduit connection to the VLLD controller junction box.

Otherwise, run new conduit from the TLS-350 or TLS-350R console to the submersible pump manhole.

Important ☞ *The VLLD controller junction box in the submersible pump manhole must be within 4 feet of the VLLD Controller location.*

Conduit Between the VLLD Controller and Junction Box

It will be necessary to run conduit between the VLLD controller and its junction box in the manhole after the controller has been installed. The controller has eight (8) 6-foot leads extending from a ¾-inch threaded conduit entry.

Important ☞ *The conduit between the VLLD controller and its junction box must be properly sealed within the submersible pump manhole and the boundary where they pass from a Class I, Division I area into a nonhazardous area in accordance with the National Electrical Code (NFPA 70) and the Automotive and Marine Service Station Code (NFPA 30A).*

Thermistor Conduit

The VLLD System thermistor must be installed in conduit to measure ground temperature near the product pipelines. Since this information is used as part of the line leak test calculations, thermistor position is critical.

At newly excavated sites, a separate, dedicated conduit should be used for thermistor wiring and thermistor installation. At existing sites, it is acceptable to insert the thermistor into a conduit that contains intrinsically safe wiring from a Veeder-Root probe or sensor. In either case, it is essential to follow certain thermistor positioning guidelines to help ensure proper system operation.

Important ☞ *Do not share conduit with probes or sensors connected to a different second console.*

Installing Conduit at Newly Excavated Sites

At newly excavated sites, **two methods** may be used when installing dedicated conduit. In either case, it is important that the conduit reach **a point 8 feet from the thermistor junction box** and be positioned:

- ❑ 1 foot or more from any product pipeline
- ❑ At the same average depth from ground level as the pipeline to which the VLLD is connected
- ❑ In the same backfill and under the same surface covering as the pipeline
- ❑ At least 3 feet from any heat source or heat sink such as a building or underground tank
- ❑ Away from heavy water drainage

When installed, the thermistor will be positioned at this point, 8 feet into the conduit from the thermistor junction box, for optimal temperature measurement.

New Installation: Method #1

Run conduit between the Intrinsically Safe Area of the TLS-350 or TLS-350R console to the submersible pump manhole. BE SURE that the conduit is positioned so that, at a point 8 feet from the thermistor junction box, the conduit will be positioned as described above under “Installing Conduit at Newly Excavated Sites”.

Important ☞ *Avoid any sharp bends in this conduit since the thermistor will be pushed into the conduit from the open end.*

New Installation: Method #2

Run conduit between the Intrinsically Safe Area of the TLS-350 or TLS-350R console to the submersible pump manhole.

Run a conduit from the location of the thermistor junction box out of the manhole in the same approximate direction as the product pipeline. The conduit must be sealed on the outside end and extend no more than 8 feet from the location of the junction box. **Be sure** that the conduit is positioned as described above under “Installing Conduit at Newly Excavated Sites”.

Important ☞ *Avoid any sharp bends in this conduit since the thermistor will be pushed into the conduit from the open end.*

Installing Conduit at Existing Sites

For existing sites, select a conduit containing intrinsically safe probe or sensor wiring that passes a point 8 feet from the thermistor junction box and meets the criteria listed earlier under “Installing Conduit at Newly Excavated Sites”. If existing conduit does not allow a thermistor location that meets these criteria, it may be necessary to install new thermistor conduit to insure proper system operation.

Installing VLLD Controller and Thermistor Junction Box

Safety Warnings

⚠ WARNING

This product is to be installed in systems operating near locations where highly combustible fuels or vapors may be present.

Fire or explosion resulting in serious injury or death could result if the equipment is improperly installed or modified. Serious contamination of the environment may also occur.

1. **Read and follow all instructions in this manual, including all safety warnings.**
2. **Comply with all applicable codes including: the National Electrical Code; federal, state, and local codes; and other applicable safety codes.**
3. **Do not alter or modify any component or substitute components in this kit.**
4. **Do not use this component for other systems aside from the TLS-350 or TLS-350R. Install only as described in this manual.**
5. **Do not share wiring conduit for the Volumetric Line Leak Detection (VLLD) system controller with wiring from intrinsically safe devices such as probes, sensors, and thermistors.**
6. **Ensure that conduit enters the TLS-350 or TLS-350R console through the proper preformed knockouts. See wiring diagram and field wiring instructions for detailed information.**

⚠ WARNING

You are working in an area where vehicle traffic may occur.

Serious injury or death could result if you are struck by a vehicle.

To protect yourself and others from being struck by vehicles, block off your work area during installation or service.

⚠ WARNING

This device is installed in equipment where potentially lethal voltages may exist.

Electrical shock resulting in serious injury or death may result if power is on during installation and the device is improperly installed.

Before installing this device, turn off power to the system, including console and submersible pumps.

Requirements

Important ☞ *The VLLD Controller junction box in the submersible pump manhole must be within 4 feet of the VLLD Controller location.*

Install a weatherproof electrical junction box with gasketed cover on the manhole end of the conduit run for the thermistor and an explosion-proof junction box for each VLLD controller. Gasketing or sealing compound must be used at each entry to the box to ensure a waterproof junction. The interior of the VLLD controller junction box must be a minimum of 16 cubic inches.

Installing Field Wiring

See Figure 2 on page 22.

Important ☞ ***To the installer:*** *Read and adhere carefully to the instructions in the following warnings during wiring installation!*

Safety Warnings

⚠ WARNING

This product is to be installed in systems operating near locations where highly combustible fuels or vapors may be present.

Fire or explosion resulting in serious injury or death could result if the equipment is improperly installed or modified. Serious contamination of the environment may also occur.

1. **Read and follow all instructions in this manual, including all safety warnings.**
2. **Comply with all applicable codes including: the National Electrical Code; federal, state, and local codes; and other applicable safety codes.**
3. **Do not alter or modify any component or substitute components in this kit.**
4. **Do not use this component for other systems aside from the TLS-350 or TLS-350R. Install only as described in this manual.**
5. **Do not share wiring conduit for the Volumetric Line Leak Detection (VLLD) system controller with wiring from intrinsically safe devices such as probes, sensors, and thermistors.**
6. **Ensure that conduit enters the TLS-350 or TLS-350R console through the proper preformed knockouts. See wiring diagram and field wiring instructions for detailed information.**

⚠ WARNING

You are working in an area where vehicle traffic may occur.

Serious injury or death could result if you are struck by a vehicle.

To protect yourself and others from being struck by vehicles, block off your work area during installation or service.

⚠ WARNING

This device is installed in equipment where potentially lethal voltages may exist.

Electrical shock resulting in serious injury or death may result if power is on during installation and the device is improperly installed.

Before installing this device, turn off power to the system, including console and submersible pumps.

Notes to System Wiring Diagram

The following notes are referenced in Figure 2 on page 22 and the following page.

1. Wiring to probes and sensors must be gas and oil resistant sizes from AWG #18 to AWG #14. Barrier ground wiring must be AWG #12 or larger.
2. Connect with AWG #12 (or larger) conductor the barrier ground to the earth ground bus at the power distribution panel.
3. A ⦿ denotes field wiring connection using waterproof connectors supplied with the probe(s) and sensor(s).
4. Intrinsically safe wiring shall be installed in accordance with Article 504-20 of the NEC ANSI/NFPA 70, 1990.
5. To maintain intrinsic safety and proper system operation, probe and sensor wiring must be installed within sealed conduit.
6. Electrical rating power input: 120 VAC, 50/60 Hz, 600 Watts maximum.
7. Use existing knockouts for conduit entry into appropriate console compartment.
8. See “Pump Control Wiring” on page 54.

VLLD Controller Field Wiring Installation

Pull eight #18 AWG color-coded or marked wires between the Power Area of the TLS-350 or TLS-350R console and the junction box at each VLLD Controller location.

Important ☞ *It is recommended for ease of installation that in place of individual wires, you use Veeder-Root VLLD Field Wiring Cable:*
8-conductor: 330221-001 (250 feet) or 330221-002 (500 feet)
11-conductor: 330221-101 (250 feet) or 330221-102 (500 feet)

We suggest that you match the field wire colors with the color-coded leads from the VLLD controller. Use the following sizes and colors:

- ❑ #18 Blue #18 Red
- ❑ #18 Violet #18 White
- ❑ #18 Yellow #18 Grey
- ❑ #18 Orange #18 Green

All wires must be of a type designed for use in the presence of gasoline and oil, and must be #18 AWG or larger. The conduit must be sealed in accordance with the National Electrical Code (NFPA 70) and the Automotive and Marine Service Station Code (NFPA 30A) since they pass from a Class I, Division I or Division II area into a nonhazardous area.

Since wiring for multiple VLLD Controllers may be entering the TLS-350 or TLS-350R console through the same conduit opening, be sure to color code or mark each wire to identify its source.

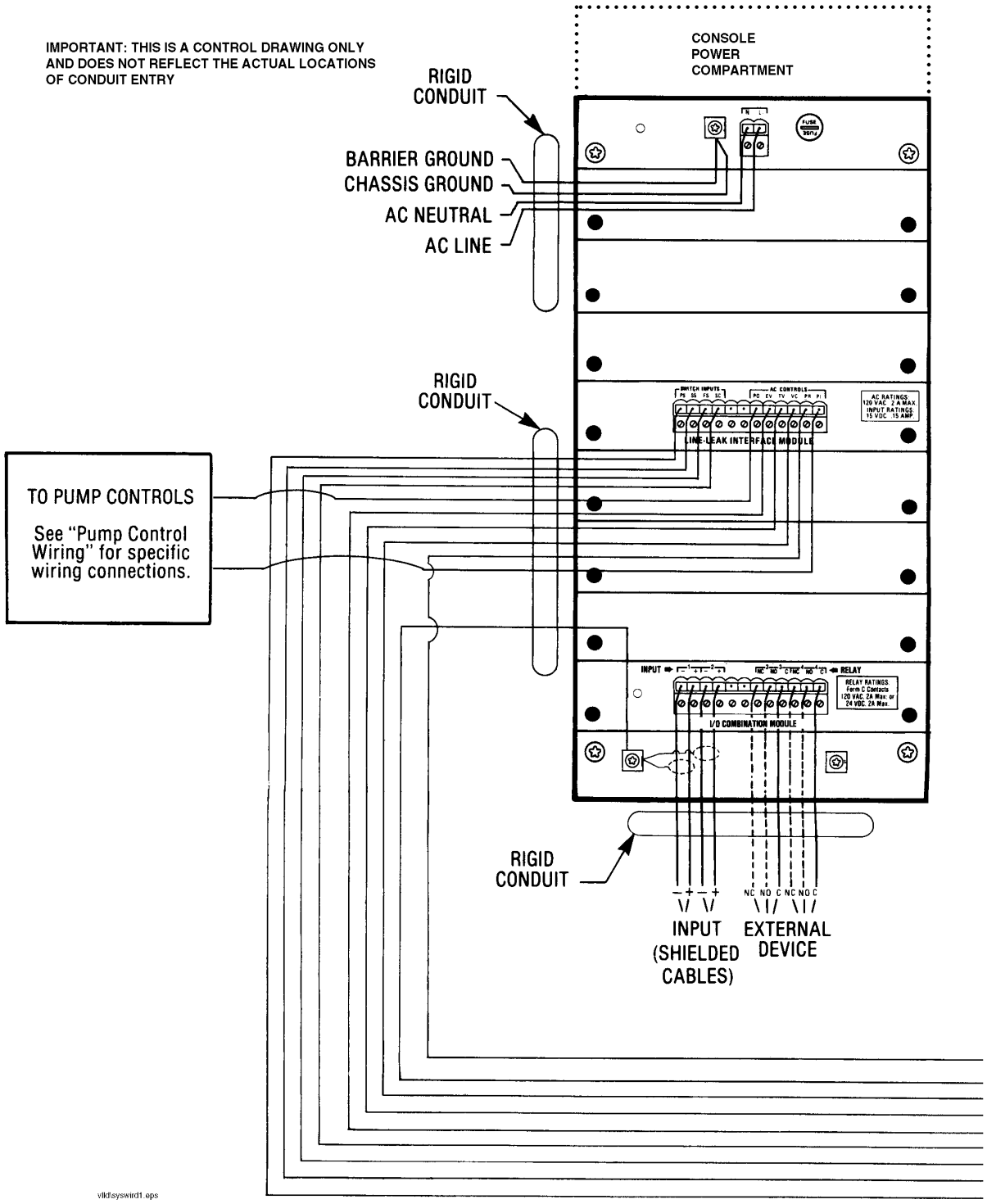

Figure 2. TLS-350/TLS-350R System Wiring Diagram

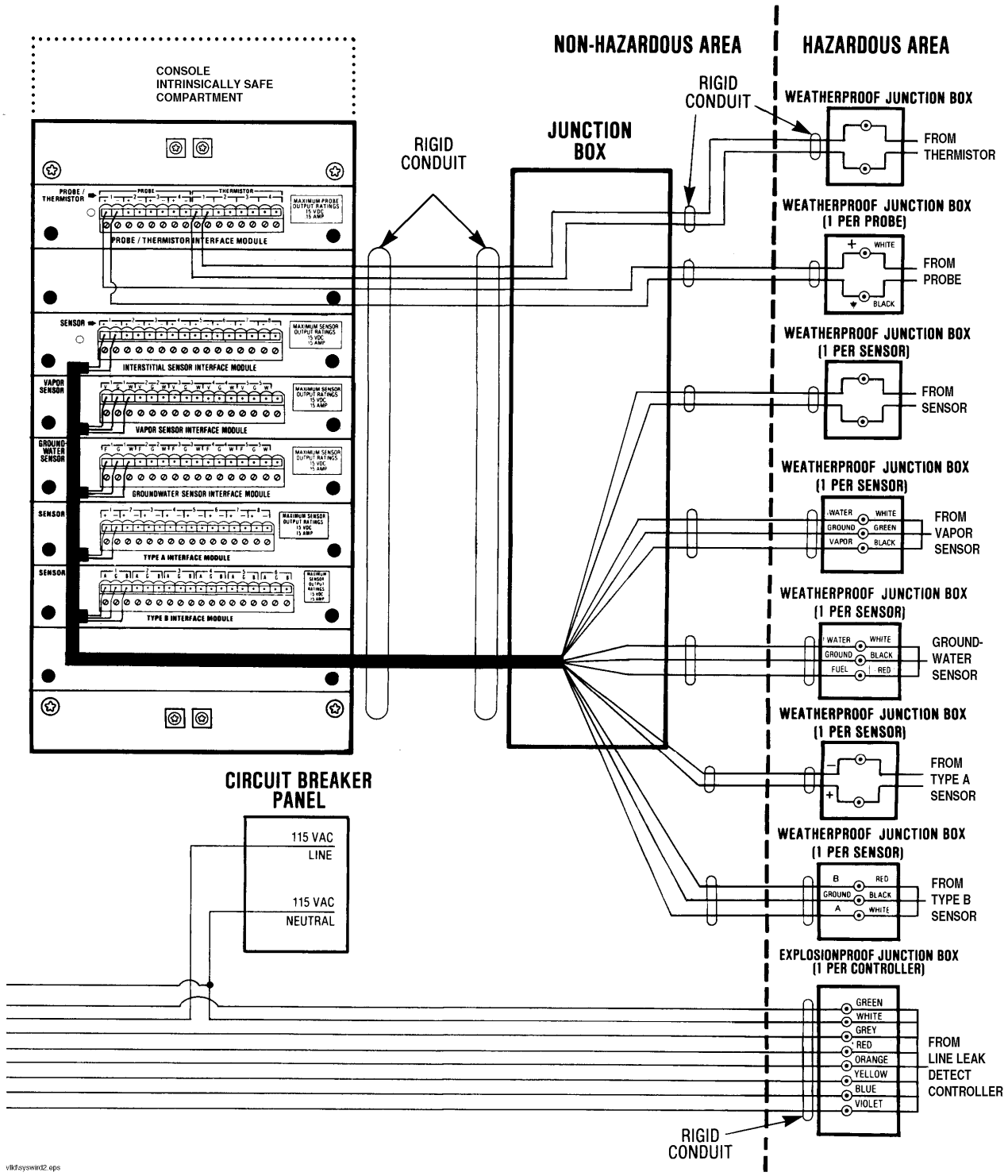

Figure 2. (continued)

Pump Control Field Wiring Installation

Pull three (3) #14 AWG color-coded or marked wires for each VLLD Line Leak Interface Module between the Power Area of the TLS-350 or TLS-350R console and the submersible pump relay control box.

Since wiring for multiple pump controls may be entering the TLS-350 or TLS-350R console through the same conduit opening, be sure to color code or mark each wire to identify its source.

Thermistor Field Wiring Installation

Important ☞ *The following procedure is not required if the tank monitor is programmed for "Vol. Chg. Meas."*

Two methods may be used to install thermistor field wires. With either method, all wires must be of a type designed for use in the presence of gasoline and oil, and must be between #18 AWG or larger. The conduit must be sealed in accordance with National Electrical Code (NFPA 70) and the Automotive and Marine Service Station Code (NFPA 30A) since they pass from a Class I, Division I or Division II area into a nonhazardous area.

Installation in Existing Probe or Sensor Conduit or New Installation: Method #1

Pull two (2) #18 AWG color-coded or marked wires and one pull wire or cord from the Intrinsically Safe Area of the TLS-350 or TLS-350R console to the junction box at the thermistor location.

Important ☞ *The pull wire or cord will be used to pull the thermistor into the conduit at the junction box end.*

New Installation: Method #2

Pull two (2) #18 AWG color-coded or marked wires from the Intrinsically Safe Area of the TLS-350 or TLS-350R console to the junction box at the thermistor location.

Installing the System

Safety Warnings

WARNING

This product is to be installed in systems operating near locations where highly combustible fuels or vapors may be present.

Fire or explosion resulting in serious injury or death could result if the equipment is improperly installed or modified. Serious contamination of the environment may also occur.

1. **Read and follow all instructions in this manual, including all safety warnings.**
2. **Comply with all applicable codes including: the National Electrical Code; federal, state, and local codes; and other applicable safety codes.**
3. **Do not alter or modify any component or substitute components in this kit.**
4. **Do not use this component for other systems aside from the TLS-350 or TLS-350R. Install only as described in this manual.**
5. **Do not share wiring conduit for the Volumetric Line Leak Detection (VLLD) system controller with wiring from intrinsically safe devices such as probes, sensors, and thermistors.**
6. **Ensure that conduit enters the TLS-350 or TLS-350R console through the proper preformed knockouts. See wiring diagram and field wiring instructions for detailed information.**

WARNING

You are working in an area where vehicle traffic may occur.

Serious injury or death could result if you are struck by a vehicle.

To protect yourself and others from being struck by vehicles, block off your work area during installation or service.

⚠ WARNING

This device is installed in equipment where potentially lethal voltages may exist.

Electrical shock resulting in serious injury or death may result if power is on during installation and the device is improperly installed.

Before installing this device, turn off power to the system, including console and submersible pumps.

Pump Port Strainer Installation

If the submersible turbine pump is equipped with a mechanical LLD System, remove it before installing the Veeder-Root pump port strainer. Then proceed as follows.

1. Remove the mechanical unit and any related tubing and fittings. Plug any tubing ports with an appropriate plug and sealant as required.
2. If the submersible turbine pump is not equipped with a mechanical LLD System, remove the mechanical LLD port plug (2”).
3. Install the pump port strainer (Figure 3) in the mechanical LLD pump port.

Important ☞ *Seal the NPT threads only with a UL classified nontoxic pipe sealant compatible with the liquid involved. Do not allow sealant to contact the strainer screen.*

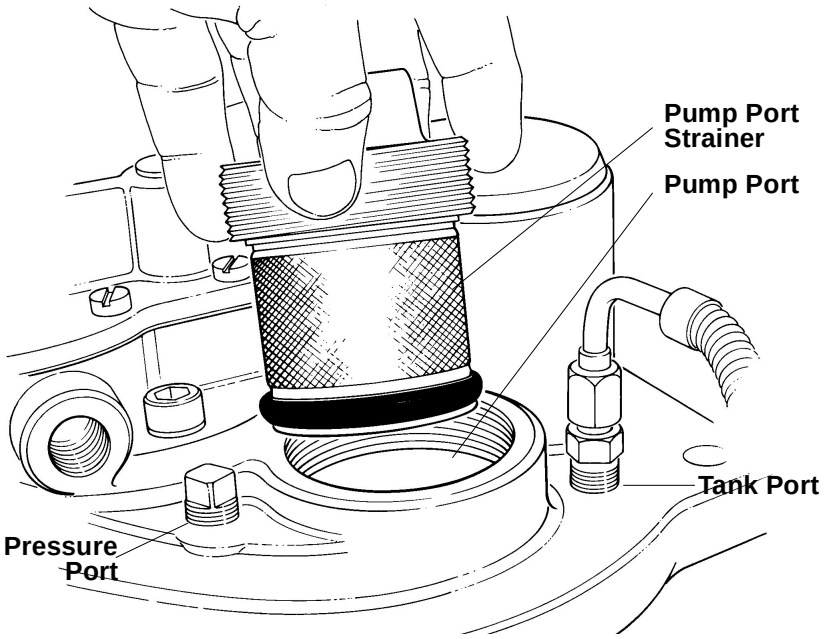

Figure 3. Strainer and Tank Port Fitting Installation (Red Jacket Pump)

Tank Port Fitting Installation

To install the tank port fitting, proceed as follows:

1. If you removed a mechanical LLD, as just described under “Pump Port Strainer Installation”, remove any fitting from the ¼-inch tank port (see Figure 3 on page 26). If the submersible pump was not equipped with a mechanical LLD, remove the ¼-inch tank port plug.

Important ☞ *If the submersible turbine pump is not equipped with a “Tank” port, refer to the pump manufacturer's procedures for providing this port.*

2. Install the Veeder-Root tank port fitting provided with the VLLD system into the tank port.

Important ☞ *Seal the NPT threads only with a UL classified nontoxic pipe sealant compatible with the liquid involved.*

3. Tighten all connections to prevent any leakage.

Pressure Port Fitting Installation

To install the pressure port fitting:

1. Remove the plug from the pump pressure port on the submersible (see Figure 3 on page 26).
2. Install a Tank Port Fitting.

Important ☞ *Seal the NPT threads only with a UL classified nontoxic pipe sealant compatible with the liquid involved.*

Thermistor Installation

Important ☞ *A thermistor is installed if the console is programmed for “Temperature Meas.”*

The thermistor installation method will depend on what type of conduit run was installed at the site (see “Thermistor Conduit” on page 15 for more information).

Important ☞ *Only one thermistor is required per site and it must connect to thermistor channel #1 only.*

The thermistor has a pull loop attached to one end and 10-foot wire leads on the other, as shown in Figure 4.

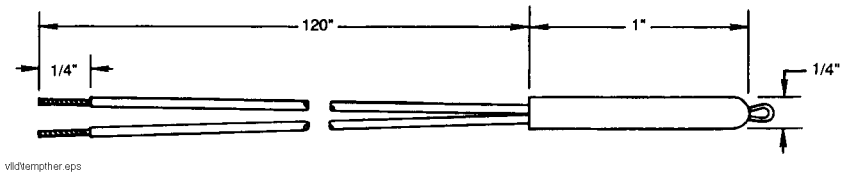

Figure 4. Temperature Thermistor

Turn Off Power

For all thermistor installations, be sure AC power to the submersible pump and TLS-350 or TLS-350R system is OFF before beginning installation.

WARNING

This device is installed in equipment where potentially lethal voltages may exist.

Electrical shock resulting in serious injury or death may result if power is on during installation and the device is improperly installed.

Before installing this device, turn off power to the system.

Pull Cord Installation

If a pull cord was pulled with the two thermistor field wires through the conduit run (see “Thermistor Field Wiring Installation” on page 24), install the sensor as follows.

1. At the thermistor junction box in the submersible pump manhole, attach the pull cord securely to the pull loop in the end of the thermistor.
2. From the TLS-350 or TLS-350R console, pull the thermistor approximately 8 feet into the thermistor conduit. Leave at least 1 foot of the thermistor leads protruding from the junction box for connection to the thermistor field wiring.
3. Using an ohmmeter, test the thermistor by measuring resistance across the thermistor leads. Since the resistance will vary with temperature, a reading between 5,000 and 100,000 ohms is acceptable.
4. Cut off any excess pull cord and stuff the protruding end into the conduit.

5. Seal the conduit in accordance with the National Electrical Code (NFPA 70) and the Automotive and Marine Service Station Code (NFPA 30A) since they pass from a Class I, Division I or Division II area into a nonhazardous area.

Installation Into a Sealed-End, Dedicated Conduit

Since no pull cord can be used in this type of installation, the thermistor must be pushed into the conduit. In some cases, the leads on the thermistor may be sufficient to push it in. In others, a more rigid push wire may be attached to the pull loop and used to push the thermistor into the conduit. For installation into a sealed-end, dedicated conduit, proceed as follows.

1. From the thermistor junction box in the submersible pump manhole, push the thermistor approximately 8 feet into the conduit.
2. Leave at least 1 foot of the thermistor leads protruding from the junction box for connection to the thermistor field wiring.
3. Using an ohmmeter, test the thermistor by measuring resistance across the thermistor leads. Since the resistance will vary with temperature, a reading between 5,000 and 100,000 ohms is acceptable.
4. Cut off any excess push wire (if used) and stuff the protruding end into the conduit.

VLLD Check Valve Installation

The installation of the VLLD check valve depends on the location of the submersible pump and product pipeline in the manhole and the size of the manhole. In most installations the simplest location for the check valve is to install it into the pump outlet. Figure 5 on page 30 and Figure 6 on page 31 show typical installation layouts for single tank applications. For dual tank/dual pump applications, refer to “Manifolded Product Lines VLLD Installation” on page 37 and Figure 13 on page 39.

The instructions in this section describe only the mandatory guidelines that must be followed.

Preparing Existing Systems

If this is a new installation where no piping currently exists, proceed to “Installing the Check Valve” on page 32. In existing systems, where piping is currently installed, prepare your system as described below before installing the check valve.

1. Turn OFF power to the Submersible Pump Tank (STP) and TLS-350 and TLS-350R. Make sure that the system is OFF before beginning the installation.
2. Close the shutoff valve (if installed) in the manhole to prevent fuel from draining back from the dispenser.

3. Place a catch pan or container to collect draining product under the union where the piping will be disconnected from the submersible pump.

⚠ WARNING

Product spillage could create serious environmental and safety hazards.

Fire, explosion, or ground contamination could occur.

1. **If the VLLD Check Valve is being installed at an existing site, drain the product pipeline using approved containers and procedures that will prevent product spillage.**
2. **Dispose of drained fuel properly. Used an approved suitable container for moving fuel. Dispose of fuel soaked materials properly and not into trash barrels that may be used by customers.**

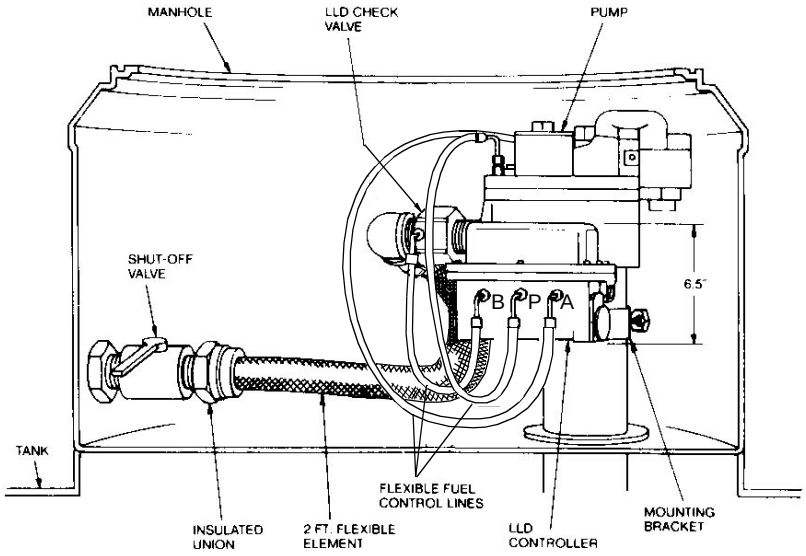

Figure 5. Typical Red Jacket VLLD Installation (side view, horizontal check valve mount)

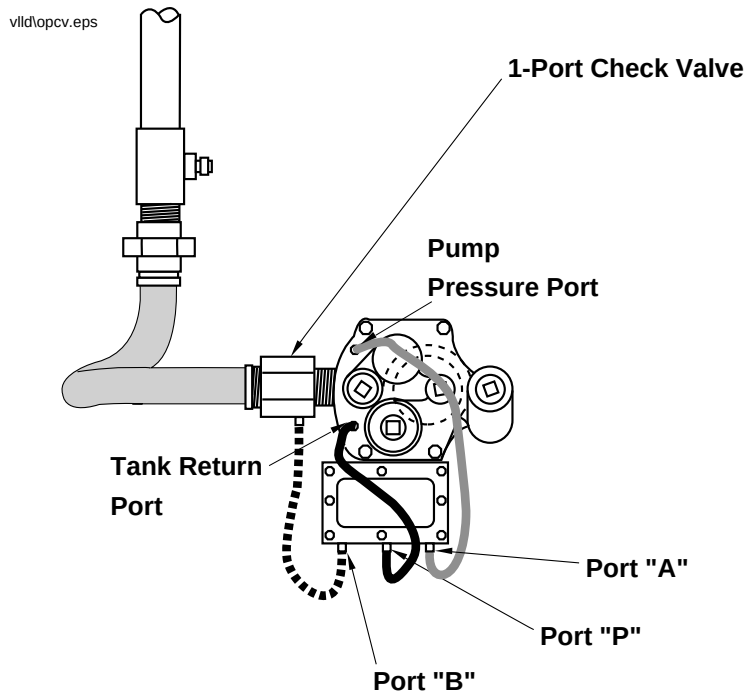

Figure 6. Typical Red Jacket VLLD Installation (top view, horizontal check valve mount)

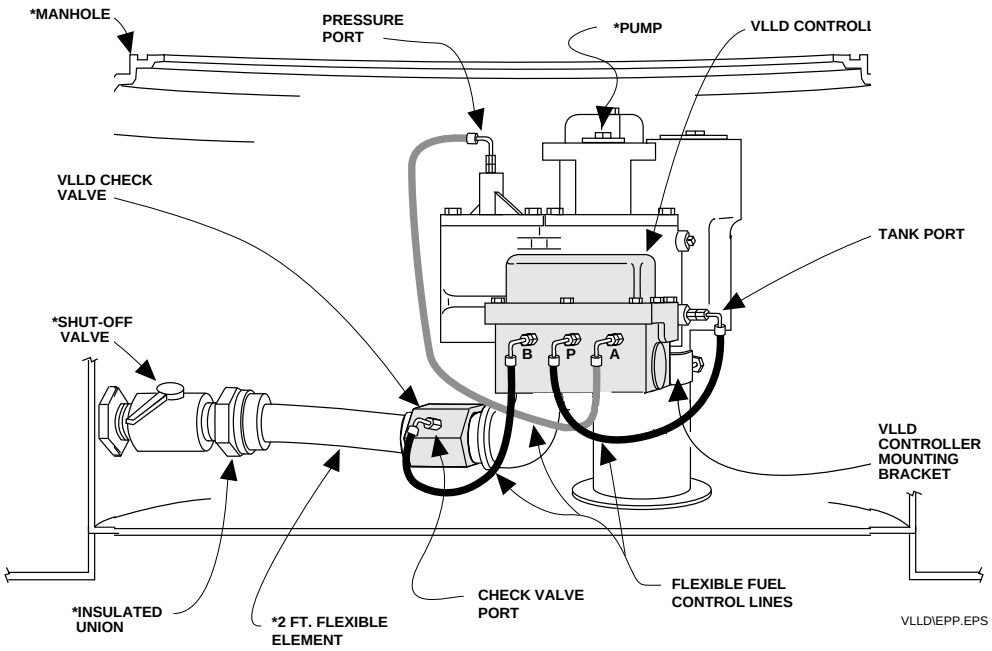

Figure 7. Typical FE Petro VLLD Installation (side view, horizontal check valve mount)

4. Loosen the union and drain the pipeline using procedures that will prevent product spillage.

5. Disconnect the pipeline at the union closest to the pump and remove existing plumbing between the product pipeline and submersible pump.

Installing the Check Valve

The following guidelines must be observed when installing the VLLD check valve:

- ❑ The VLLD check valve is threaded for a 2-inch NPT fitting at both ends.
- ❑ The VLLD check valve may be installed in either a horizontal or vertical position or at any angle.
- ❑ Be sure that the flexible fuel control line fitting is oriented on the side of the VLLD check valve facing the intended location of the VLLD controller. Avoid mounting the fitting directly on top or bottom.
- ❑ The arrow on the VLLD check valve must face in the direction of fuel flow (to the dispenser).
- ❑ A shutoff valve must be installed between the VLLD check valve and the product pipeline.

Important ☞ *A shutoff valve is required to complete the VLLD start-up procedure.*

- ❑ A dielectric union must be installed between the VLLD check valve and metal piping. A standard union may be used if the piping is made of fiberglass or other non-metallic material.
- ❑ Where it is either convenient or necessary for reasons of space, a flexible piping element can be used to connect the VLLD check valve to the shutoff valve on the product pipeline.
- ❑ When using hard piping, a union must be installed on both sides of the VLLD check valve.
- ❑ Seal all joints with a UL-classified nontoxic pipe sealant that meets all national, state and local codes. Sealant must be suitable for use with the fuel type involved.

Important ☞ *Do not use excessive amounts of sealant on the check valve threads or mating fittings. Excessive sealant could cause check valve failure.*

- When installing the check valve, avoid creating traps where air can accumulate. (See Figure 8 below. This configuration creates an area which can collect air and may cause selftest failures.).

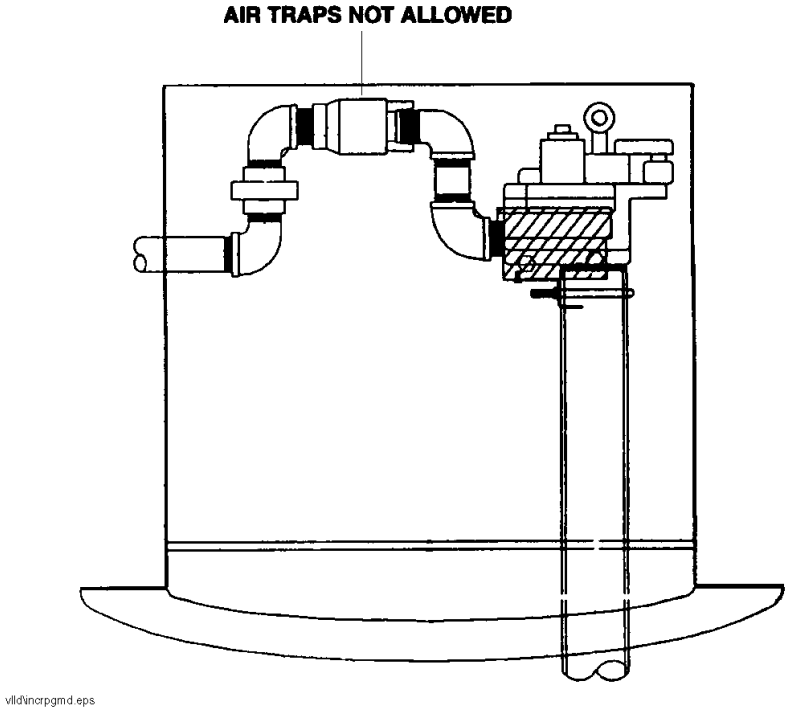

Figure 8. Incorrect Piping Method

Replacement Procedure

This section provides procedures for the installation of Check Valve Replacement Kit (part number 330020-081). The kit is used to replace both single fitting and dual fitting check valves. When replacing a dual fitting check valve, the adapter fitting (provided with the kit) must be used. When replacing a single fitting check valve, the adapter fitting is discarded.

Prepare the line for check valve installation as follows:

1. Turn off power to the Submersible Tank Pump (STP). Insure that station personnel will not turn power back on.
2. Close the shutoff valve (if installed) in the manhole to prevent fuel from draining back from the dispenser.
3. Place a non-sparking catch pan or approved container to collect draining product under the union where the piping will be disconnected from the submersible pump. Dispose of collected fuel into the tank and not into the environment.

Important ☞ *Drain the product pipeline using procedures that will prevent product spillage. Product spillage could create serious environmental and safety hazards. If using absorbing rags, do not throw fuel soaked rags into trash bins. Dispose of properly.*

4. Label the Flexible Fuel Lines to indicate which port they are attached to (A or B) and remove the lines from the port(s) on the check valve. Protect the lines from damage.

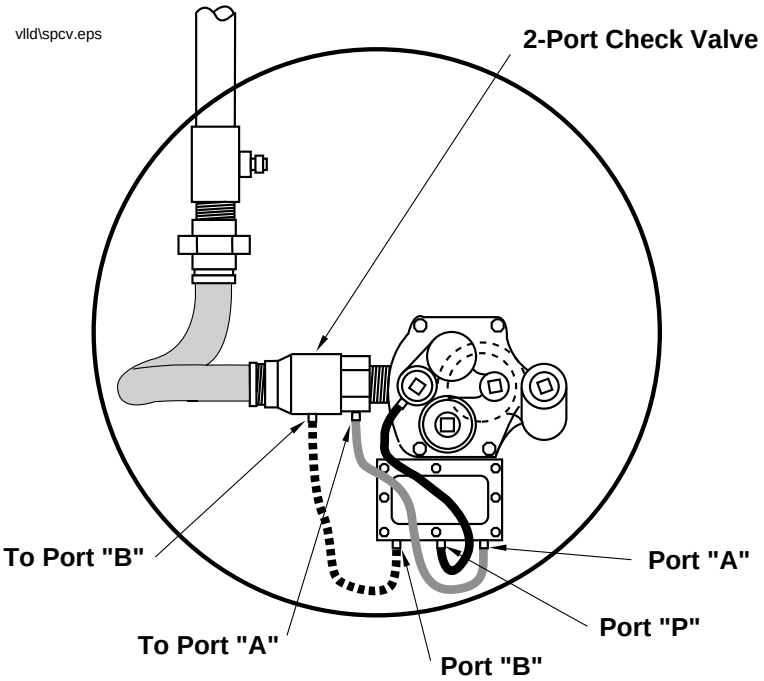

Figure 9. Top View of Older Two Port Check Valve.

Important ☞ *If you are replacing a check valve which has two flexible fuel lines attached to it (Figure 9 above and Figure 10 on page 35), you* ***must*** *use the Adapter Fitting which is provided in the replacement kit (Figure 11 on page 36). This fitting provides the "A" port required for connection to the Controller in addition to providing a length, when assembled to the check valve, approximately the same as the old-style valve. Install the Adapter Fitting onto the check valve inlet after installing the valve in the line.*

If you are replacing a check valve which has only one flexible fuel line attached to it (Figure 12 on page 36 and Figure 5 on page 30), the Adapter Fitting is not required.

5. Remove the check valve from the pipeline.
6. Install the new check valve (with Adapter Fitting, if required) into the pipeline. Seal all joints using UL-classified, nontoxic pipe sealant, suitable for fuel use, that meets all national, state, and local codes.
7. Re-install the Flexible Fuel Lines onto the check valve and tighten to prevent leakage.

Important ☞ *Do not use thread sealant on flexible fuel lines or mating fittings on the Controller or Check Valve.*

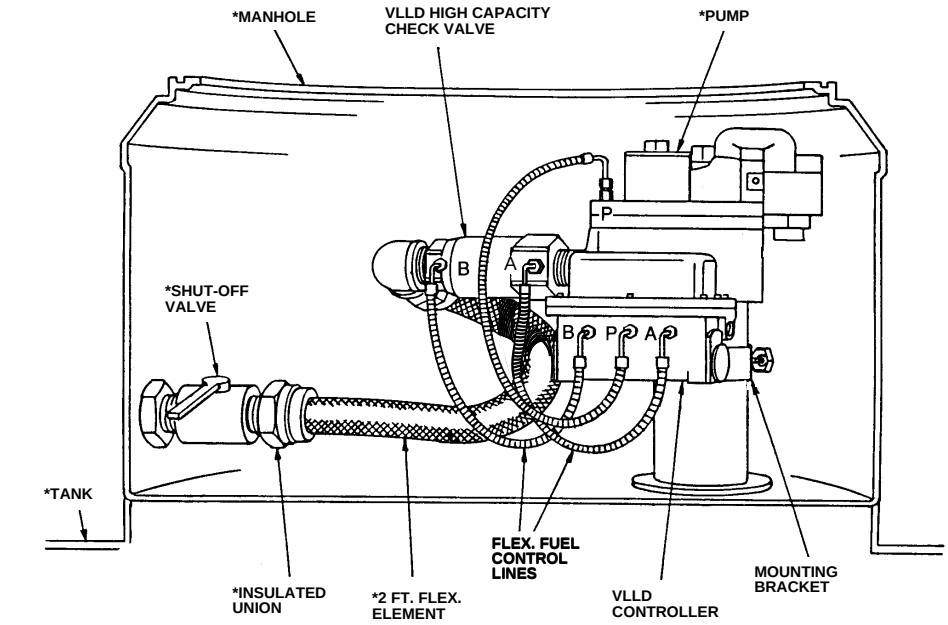

***NOT PART OF VLLD KIT**

Figure 10. Side View of Older Two Line Check Valve.

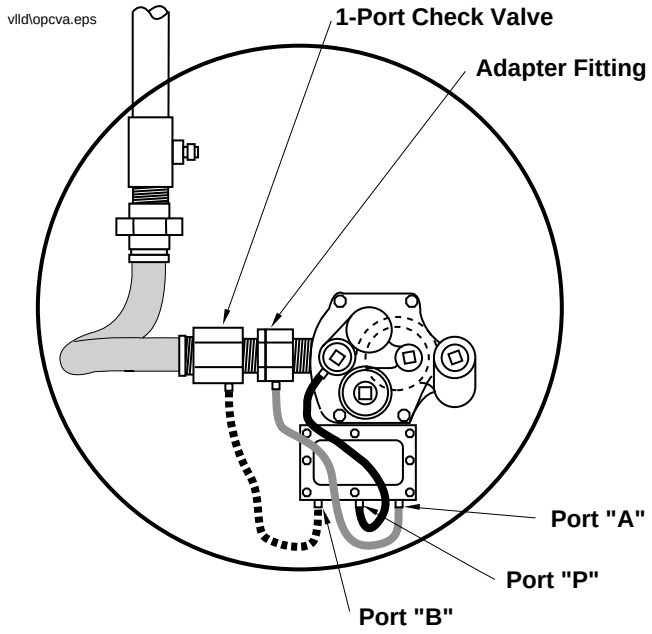

Figure 11. Top View of One Port Check Valve and Adapter Replacement for Old Two Port Check Valve.

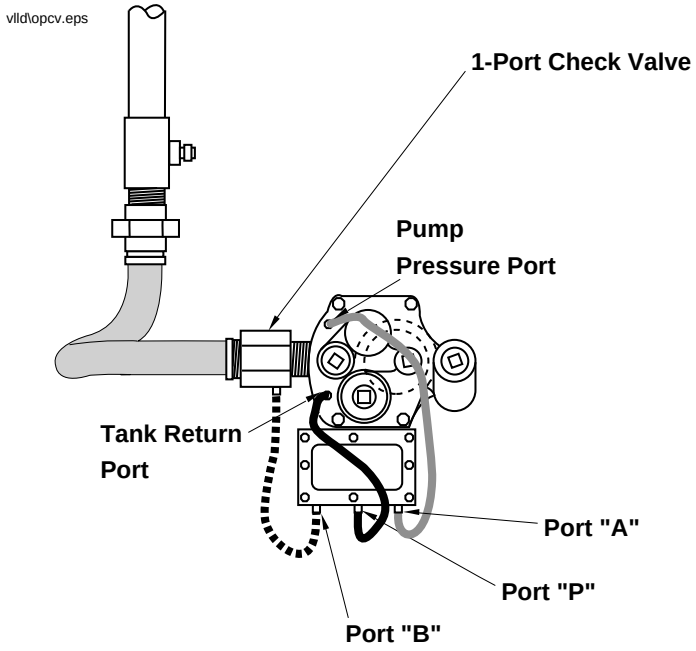

Figure 12. Top View of Old and New One Line Check Valve.

⚠ WARNING

This device is installed in equipment where potentially lethal voltages may exist.

Electrical shock resulting in serious injury or death may result if power is on during installation and the device is improperly installed.

Before installing this device, turn off power to the system.

Manifolded Product Lines VLLD Installation

TLS-350 or TLS-350R, Version 4 or later, software provides a new feature that permits the use of the VLLD on product lines supplied by two tanks and two submersible pumps. Please refer to the TLS-350 or TLS-350R Setup Manual for detailed instructions on selecting this option.

Installation Notes:

- ❑ The secondary tank must provide for leak detection in the pump sump. The secondary tank may utilize a Mechanical LLD instead of secondary containment if desired; however, this will provide only 3 gph detection for the section of pipeline between the “slave” pump and the check valve. The user is responsible for providing monthly or annual monitoring of this piping.
- ❑ If a Mechanical LLD is used, it should provide a screen to guarantee proper operation of the Veeder-Root Check Valve installed on this line.
- ❑ Dielectric unions and flexible piping elements should be used as required by federal, state, and local requirements for the specific piping application.
- ❑ Install as shown in Figure 13 on page 39.

Important ☞ *Swing check valve is not required for consoles with software Version 9/109 or later.*

- ❑ To prevent pumping from one tank to another, install a swing check valve (Figure 13 on page 39).

Important ☞ *Use of check valves other than a swing check valve in this position will cause improper VLLD operation.*

- ❑ A relay must be available on either a Four Relay Module or I/O Combination Module to control the pump on the secondary tank. The VLLD Module will provide pump control output for the primary tank and the “Pump In” signal for the set (see Figure 14 on page 40).

Manifolded Product Lines VLLD Installation

TLS-350 or TLS-350R, Version 4 or later, software provides a new feature that permits the use of the VLLD on product lines supplied by two tanks and two submersible

pumps. Please refer to the TLS-350 or TLS-350R Setup Manual for detailed instructions on selecting this option.

Installation Notes:

- ❑ The secondary tank must provide for leak detection in the pump sump. The secondary tank may utilize a Mechanical LLD instead of secondary containment if desired; however, this will provide only 3 gph detection for the section of pipeline between the "slave" pump and the check valve. The user is responsible for providing monthly or annual monitoring of this piping.
- ❑ If a Mechanical LLD is used, it should provide a screen to guarantee proper operation of the Veeder-Root Check Valve installed on this line.
- ❑ Dielectric unions and flexible piping elements should be used as required by federal, state, and local requirements for the specific piping application.
- ❑ Install as shown in Figure 13 on page 39.

Important ☞ *Swing check valve is not required for consoles with software Version 9/109 or later.*

- ❑ To prevent pumping from one tank to another, install a swing check valve (Figure 13 on page 39).

Important ☞ *Use of check valves other than a swing check valve in this position will cause improper VLLD operation.*

- ❑ A relay must be available on either a Four Relay Module or I/O Combination Module to control the pump on the secondary tank. The VLLD Module will provide pump control output for the primary tank and the "Pump In" signal for the set (see Figure 14 on page 40).

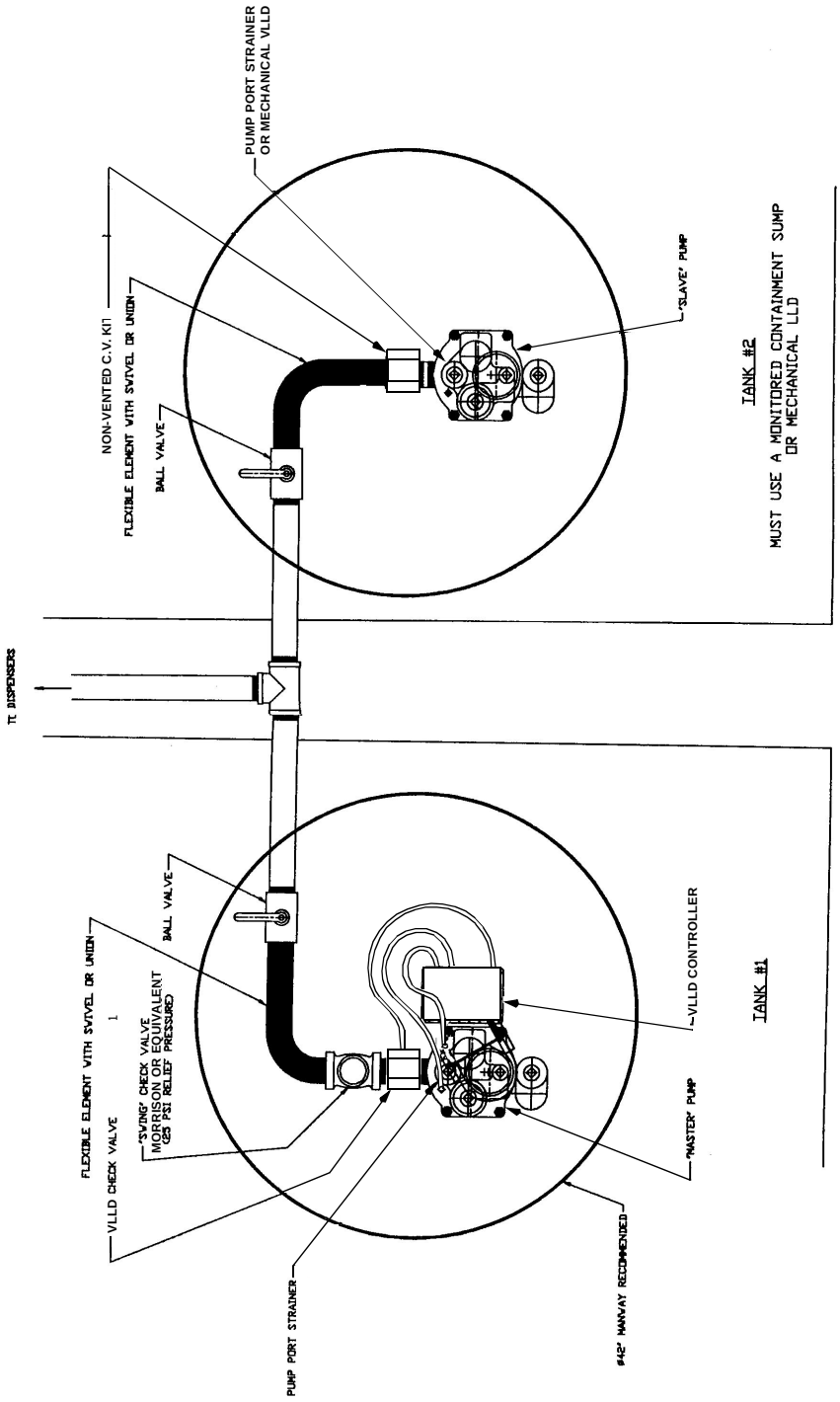

Figure 13. Manifolded Product Lines VLLD Installation—Dual Tanks/Dual Pumps

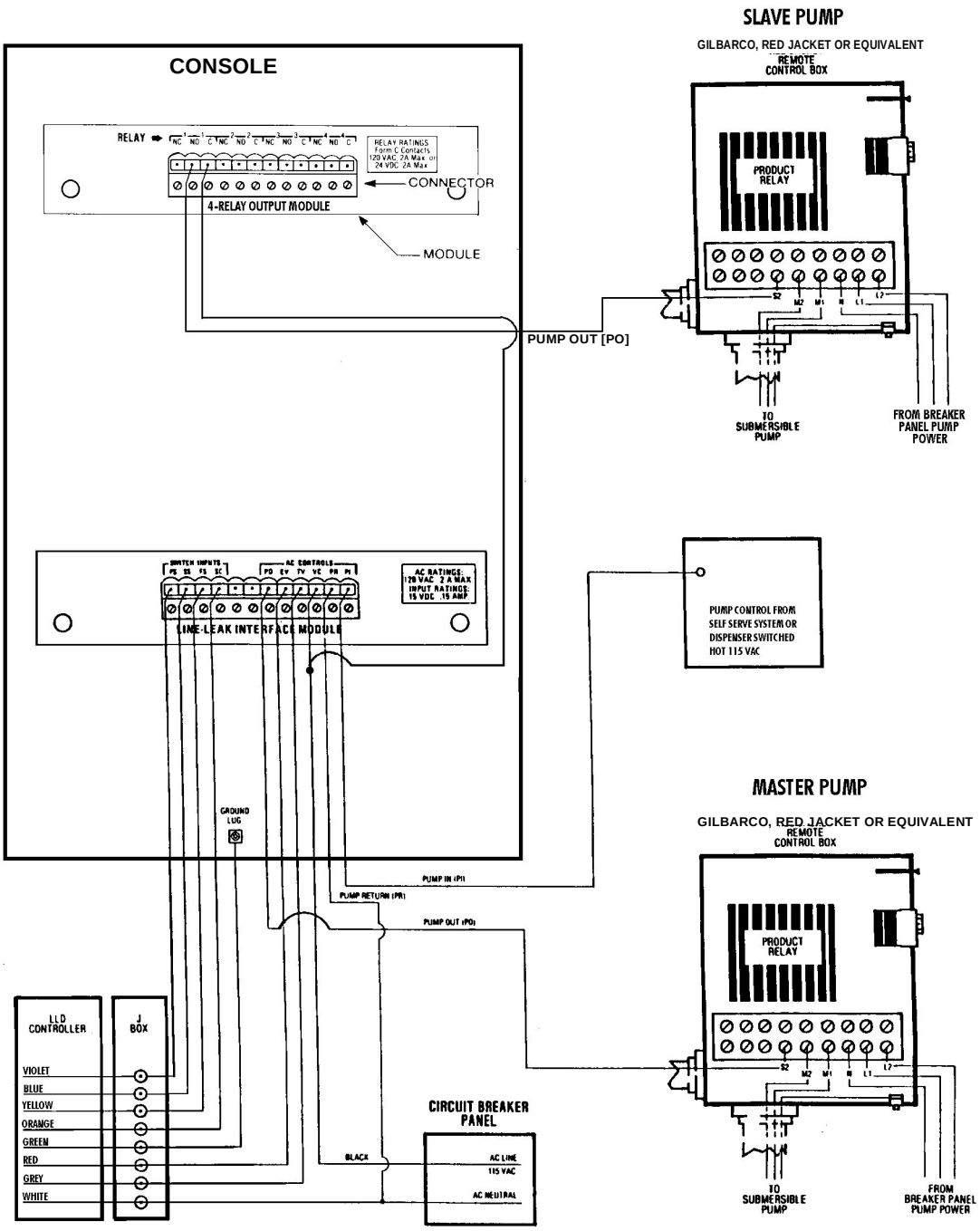

Figure 14. Manifolded Product Lines VLLD Installation—Wiring Diagram

VLLD Controller Installation

When planning the installation of a VLLD controller, consider the length (approximately 3 feet) of the three (3) flexible fuel control lines and the VLLD check valve location. One of the lines must reach between the controller and check valve. The other two extend from the controller to the “Tank” and “Pressure” ports on the submersible.

Important ☞ *Do not mount the controller to piping, conduit or any part of the manhole or leave loose in the manhole. Improper system operation could result if the VLLD controller is not mounted on its bracket according to these instructions.*

To install the VLLD controller:

1. Remove the mounting bracket assembly from its packaging and separate the clamp from the bracket.
2. Place the U-shaped clamp around the pump riser, and insert the ends of the clamp into the tabs on the bracket.

Important ☞ *The bracket can be installed in two different positions. Choose the side of the pump where the controller will be.*

3. Position the bracket to ensure the flexible fuel lines will be able to reach the check valve ports and not be kinked during installation. Tighten the knob on the clamp to secure it in place.
4. Place the controller onto the bracket so the locating studs on the controller drop into the mating holes on the bracket.
5. Secure the controller to the bracket using the two thread-forming screws provided with the mounting bracket assembly. Securely tighten the screws.
6. Prepare **watertight** conduit to run from the conduit entry on the controller to the controller junction box.

Important ☞ *The conduit between the VLLD controller and its junction box must be properly sealed in accordance with the National Electrical Code (NFPA 70) and the Automotive and Marine Service Station Code (NFPA 30A).*

If the conduit location requires that the VLLD controller wires exit on the opposite sides of the controller, follow these steps:

a. Remove the eight bolts securing the VLLD controller cover in place and set aside for later reinstallation.
b. Carefully remove the cover from the housing, taking care not to remove the O-ring on the housing.
c. Remove the 3/4-inch plug on the unused conduit port and set aside for reuse.
d. Carefully pull the wires and sealing grommet (if present) out of the conduit port.

e. Thread the wires through the opposite conduit port. Push the sealing grommet into the port until the shoulder of the grommet is against the housing (see Figure 15).

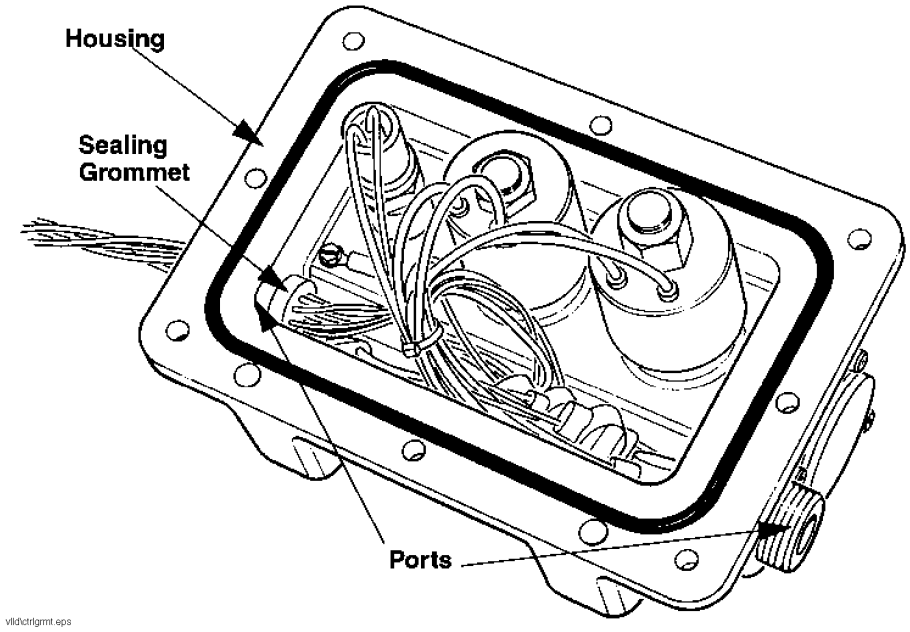

Figure 15. Controller with Grommet Installed

f. Tuck wire connectors into the VLLD controller housing recess, ensuring they are clear of the cover and housing joint.

Important ☞ *Failure to position the wires away from the joint will cause pinched wires, resulting in controller failure and exclusion of warranty!*

g. Ensure the O-ring on the housing flange is fully seated in the groove, and that mating surfaces on the cover and housing area clean.

h. Place the cover back onto the housing, ensuring all holes on the cover match the holes on the housing.

i. Reinstall the eight bolts securing the cover to the housing. Torque to 45 +/- 5 inch-lbs.

⚠ WARNING

A loose cover represents a serious safety hazard.

Failure to install and properly secure the cover could result in severe environmental damage or explosion resulting in death, serious personal injury, property loss, and damage.

Reinstall and secure the housing cover exactly as described in these instructions.

7. While the conduit is still detached from the controller and junction box, feed the eight VLLD controller wires through the conduit and into the junction box
8. Install the conduit.

Flexible Fuel Control Line Installation

⚠ WARNING

Flexible fuel control lines can be easily crimped or punctured.

The use of tools could crimp or puncture the lines resulting in improper system operation or dangerous fuel leaks that could cause explosion or other safety and environmental hazards.

Do not use tools to bend flexible fuel control lines. Bend lines by hand only.

There are three (3) flexible fuel control lines that must be installed. One runs from the check valve to the controller, one runs from the controller to the “Tank” port on the submersible pump and one runs from the controller to the “Pressure” port on the submersible pump.

Clearly marked fittings are provided on the check valve (fitting “B”) and on the controller (fittings “A”, “B” and “P”).

Important ☞ *Do not use thread sealant on flexible fuel lines or mating fittings on the Controller or Check Valve.*

1. Install the flexible fuel control lines.

Important ☞ *When installing flexible fuel lines, ensure the lines do not contact each other or other piping system components. Contact between flexible fuel lines and other parts may cause premature failure of the lines, resulting in product leaking into the environment.*

2. Connect flexible fuel control lines between:

a. Fitting “A” on the controller and the “Pressure” fitting on the submersible pump.

b. Fitting “B” on the check valve and fitting “B” on the controller.

c. Fitting “P” on the controller and the Tank port fitting on the submersible pump.

Important ☞ *To avoid damaging lines, install by attaching the end with a 90-degree elbow first and hand-tightening. Next, install the straight end and tighten.*

3. Tighten all connections to prevent any leakage.
4. Using a wire tie, attach the yellow tag provided with the strainer to the flexible fuel line attached to the tank port fitting, as close to the pump as possible. The tag notifies service contractors that the pump is equipped with a strainer.

Connecting the Wiring

Refer to Figure 2 on page 22.

Important ☞ ***To the installer:*** *Read and adhere carefully to the instructions in the following warnings during wiring installation!*

Safety Warnings

⚠ WARNING

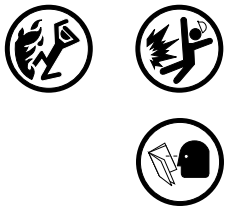

This product is to be installed in systems operating near locations where highly combustible fuels or vapors may be present.

Fire or explosion resulting in serious injury or death could result if the equipment is improperly installed or modified. Serious contamination of the environment may also occur.

1. **Read and follow all instructions in this manual, including all safety warnings.**
2. **Comply with all applicable codes including: the National Electrical Code; federal, state, and local codes; and other applicable safety codes.**
3. **Do not alter or modify any component or substitute components in this kit.**
4. **Do not use this component for other systems aside from the TLS-350 or TLS-350R. Install only as described in this manual.**
5. **Do not share wiring conduit for the Volumetric Line Leak Detection (VLLD) system controller with wiring from intrinsically safe devices such as probes, sensors, and thermistors.**
6. **Ensure that conduit enters the TLS-350 or TLS-350R console through the proper preformed knockouts. See wiring diagram and field wiring instructions for detailed information.**

⚠ WARNING

You are working in an area where vehicle traffic may occur.

Serious injury or death could result if you are struck by a vehicle.

To protect yourself and others from being struck by vehicles, block off your work area during installation or service.

WARNING

This device is installed in equipment where potentially lethal voltages may exist.

Electrical shock resulting in serious injury or death may result if power is on during installation and the device is improperly installed.

Before installing this device, turn off power to the system, including console and submersible pumps.

General Wiring Practices

Be sure all wires are color-coded or carefully marked to identify their source.

The VLLD Line Leak Interface Module in the TLS-350 or TLS-350R console comes with a connector in place. **Do not remove the connector from the module or remove the module from its slot in the console during wiring.** Terminal identifications appear only on the module bracket. Removing the connector from the module increases the risk of wiring errors.

Label all connectors using the self-adhesive labels supplied according to the slot in which the modules are installed.

Important ☞ *Once a connector has been wired on a module and the TLS-350 or TLS-350R system has been programmed, the connector and module cannot be moved to another slot without reprogramming the system.*

Record the location (i.e., Tank #1, Tank #2, etc.) of each VLLD wired to a module on the circuit directory located inside the TLS-350 or TLS-350R door.

VLLD Interface Module Wiring Connections

To connect the VLLD system interface module:

1. Turn OFF all AC power to the TLS-350 or TLS-350R console and submersible pumps.
2. Connect the ground wire from each VLLD controller to a ground lug in the Power Area of the TLS-350 or TLS-350R console.
3. Connect the seven (7) remaining color-coded or marked wires from each VLLD controller and the three (3) wires from the pump controls to the proper terminals on the VLLD Line Leak Interface Module connector (see Figure 17 on page 49 and Figure 18 on page 50).

Important ☞ *The lowest module in the console will be considered slot #1 by the system; the one above it will be slot #2, etc.*

4. Be sure to maintain correct circuit orientation between the color-coded or marked field wires and connector terminals during wiring.

VLLD Controller Field Wiring Connections

To connect field wires to the VLLD controller:

1. Turn OFF all AC power to the TLS-350 or TLS-350R system and submersible pump.
2. Using wire nuts, connect the wires from the VLLD controller to field wires in the junction box see Figure 17 on page 49 and Figure 18 on page 50). Be sure to maintain correct circuit orientation between the color-coded or marked field wires and VLLD controller wires during wiring.

CAUTION

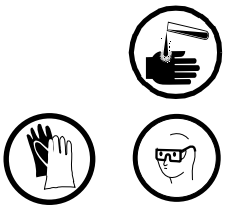

Epoxy sealant may be irritating to skin and eyes, absorbed through the skin, or cause skin sensitization in susceptible individuals.

Minor injury may result. Also materials contained in epoxy have caused skin cancer in animal tests.

Avoid skin and eye contact. Wear appropriate safety equipment. Use only in well ventilated areas.

3. Seal wire nut connections at this time using the epoxy sealant furnished with each VLLD. Use one packet for no more than two wire nut connections. To prepare epoxy and seal connections:
   a. Alternately squeeze each end of packet until wall between two chambers breaks, allowing contents to mix. Continue to knead packet until color is uniform and contents are completely blended.
   b. Cut one end of packet. Insert wire nuts and wires into packet [Figure 16].
   c. Tie open end of packet with tie wrap.

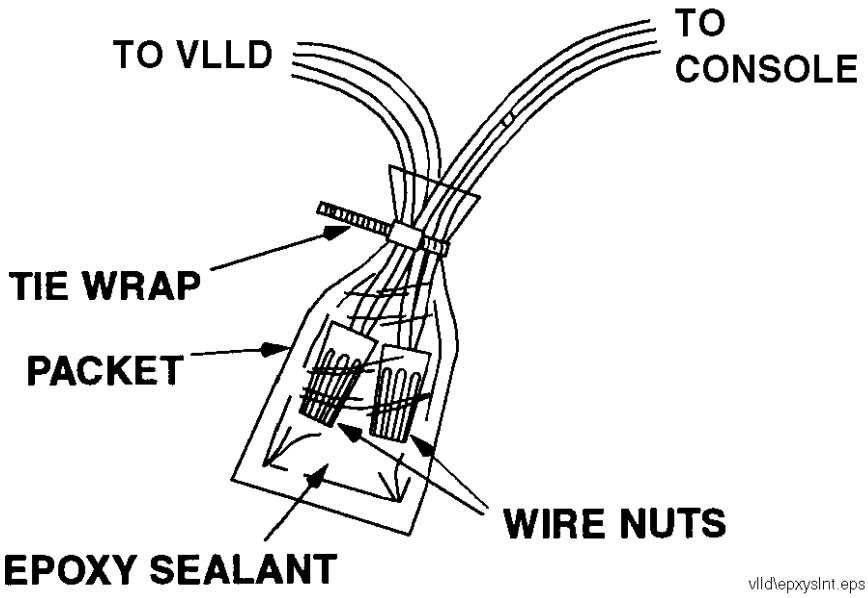

Figure 16. Epoxy Sealant Connections

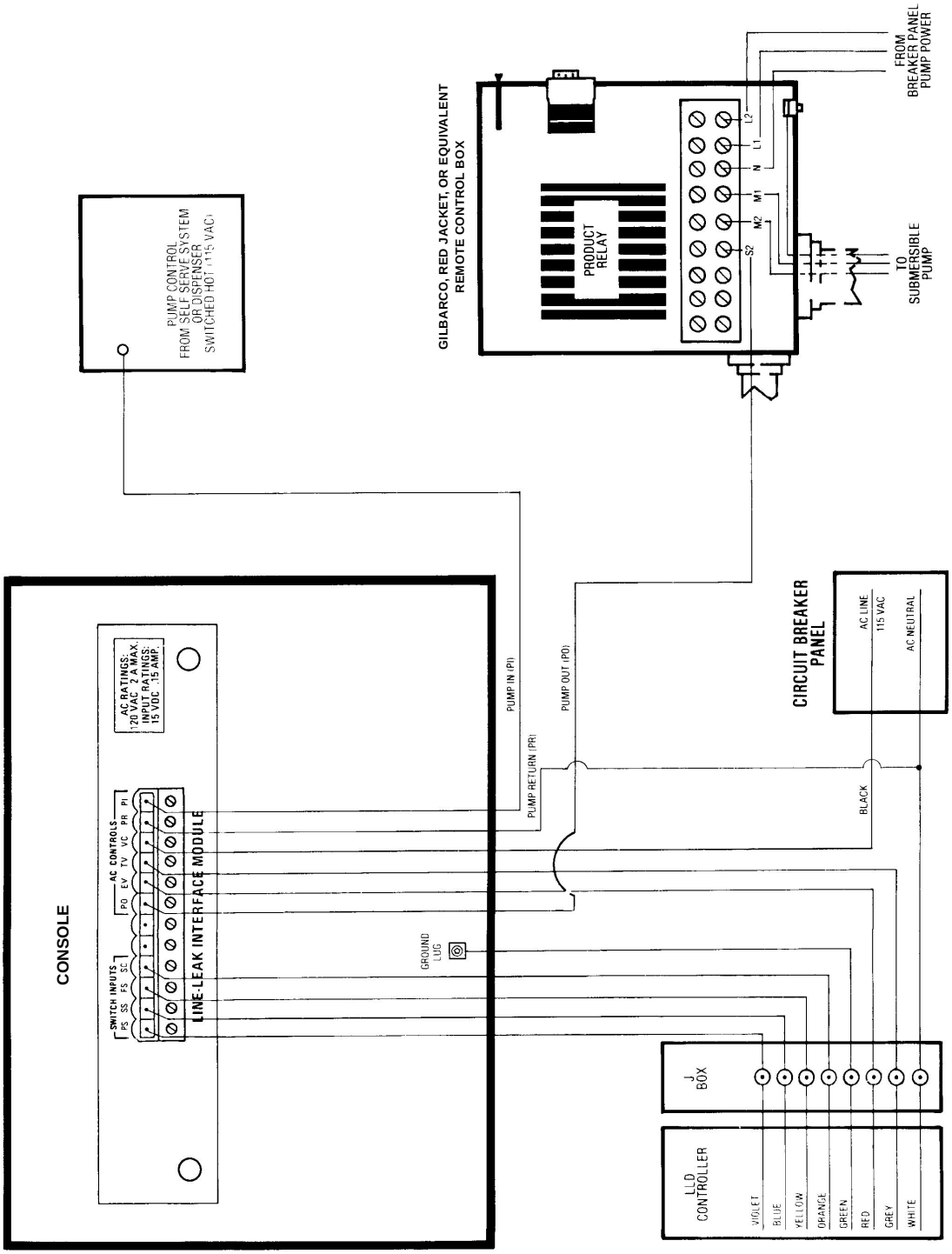

Figure 17. VLLD and Pump Control Diagram for Red Jacket, Gilbarco, or Equivalent STP Control Box

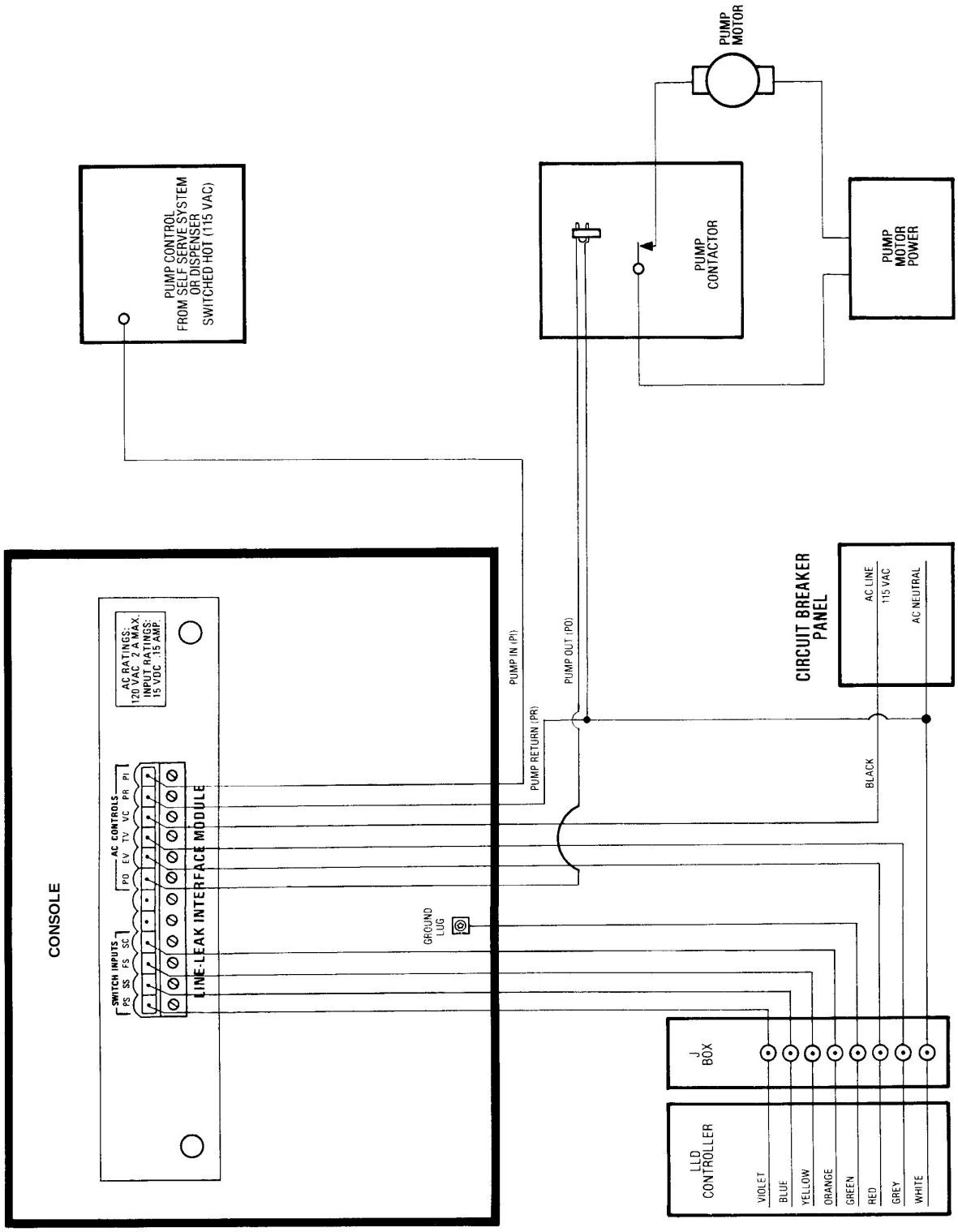

Figure 18. VLLD and Pump Control Diagram for Non-Red-Jacket Relay Control Box

Important ☞ *You must seal the wire nuts or warranty will be void!*

If more than two wire nut connections share an epoxy sealant bag, the connections will not be properly sealed. Improper sealing of the connections may result in inaccurate system readings and false alarm conditions.

Thermistor Interface Module Wiring Connections

To connect the thermistor interface module:

1. Turn OFF all AC power to the TLS-350 or TLS-350R console and submersible pumps.
2. Connect the two (2) color-coded or marked wires from the thermistor to the terminals for Thermistor #1 on the Thermistor Interface Module connector (see Figure 19 on page 52).

Important ☞ *Only terminal position #1 on Thermistor Interface Module can read thermistor.*

Thermistor Field Wiring Connections

Important ☞ *Refer to "General Wiring Practices" on page 46 for important wiring information.*

To connect field wires to the thermistor:

1. Turn OFF all AC power to the TLS-350 or TLS-350R system and submersible pump.

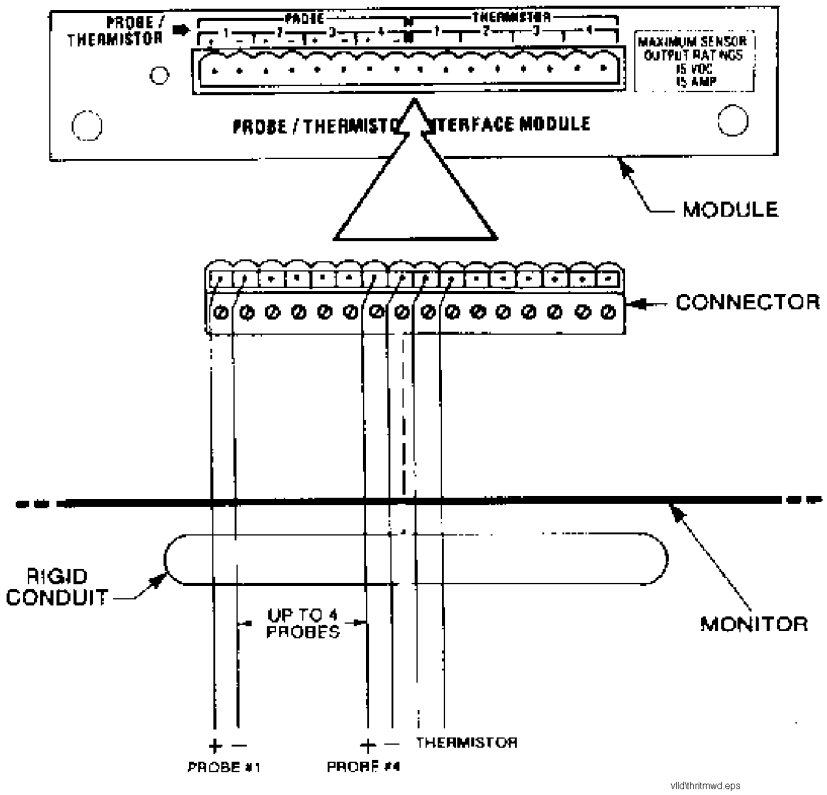

Figure 19. Thermistor Interface Module Wiring Diagram

2. Using wire nuts, connect the wires from the thermistor to field wires in the junction box (see Figure 20).

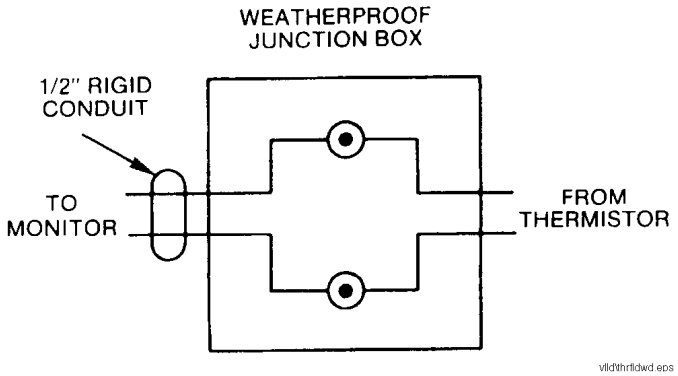

Figure 20. Thermistor Field Wiring Diagram

CAUTION

Epoxy sealant may be irritating to skin and eyes, absorbed through the skin, or cause skin sensitization in susceptible individuals.

Minor injury may result. Also materials contained in epoxy have caused skin cancer in animal tests.

Avoid skin and eye contact. Wear appropriate safety equipment. Use only in well ventilated areas.

3. Seal wire nut connections at this time using the epoxy sealant furnished with each VLLD. Use one packet for no more than two wire nut connections (see detailed procedure and Figure 16 on page 48).

Pump Control Wiring

Refer to Figure 17 on page 49 and Figure 18 on page 50.

The TLS-350 or TLS-350R console must be able to detect when dispensers are ON or OFF so it only initiates line leak tests when the dispenser is OFF. The console must also be able to start the submersible pump to perform a line leak test, and shut the pump off if a leak is detected.

Detection and control is accomplished by monitoring and interrupting or simulating the STP (submerged turbine pump) control signal from the dispenser to the STP relay control box

The “Dispenser ON” signal may come from a Point-of-Sale terminal, self-serve console, a solid state relay in an electronic dispenser, or a switch inside a mechanical dispenser. This is the STP control signal normally sent directly to the STP relay control box.

Important ☞ *VLLD wiring for red jacket submersible pumps may differ from wiring for other relay control boxes. See Figure 17 on page 49 and Figure 18 on page 50.*

When installing pump control wiring for line leak detection systems, you MUST ensure that the Emergency Stop circuitry at the site is not circumvented!

To connect pump control wiring:

1. Turn OFF all AC power to the TLS-350 or TLS-350R, dispensers and submersible pumps.
2. Connect the AC Line from the “Dispenser STP Control Relay or Switch” to the wire leading to the PI (PUMP IN) terminal on the VLLD Line Leak Interface Module.

3. Connect the wire from the PO (PUMP OUT) terminal on the module to the AC Line side of the pump contactor.
4. Connect the PR (PUMP RETURN) wire from the module to AC Neutral as shown in Figure 17 on page 49 or Figure 18 on page 50.
5. If installing a system with manifolded product lines on Multiple Tanks, perform the following additional steps:

   a. Connect a wire from a “NO” terminal on the 4-Relay output or I/O Combination module to the AC line side of the pump contactor for the “slave” pump (refer to Figure 14 on page 40).

   b. Connect a wire from the “C” terminal on the 4-Relay output or I/O Combination module into the wire connecting the “VC” terminal on the VLLD Interface Module to 120 volt AC line.
6. If installing a system with Dual Pumps on a Single Tank, install an Interlock Relay as shown in Figure 21 on page 55. This relay should energize the “slave” pump only when dispensing; the slave pump MUST NOT be energized when performing line leak tests.
7. Verify that the Emergency Stop circuit has not been circumvented by initiating a 3 gph test on each line. To do this, confirm that the pump relay is NOT energized at any time during the test.

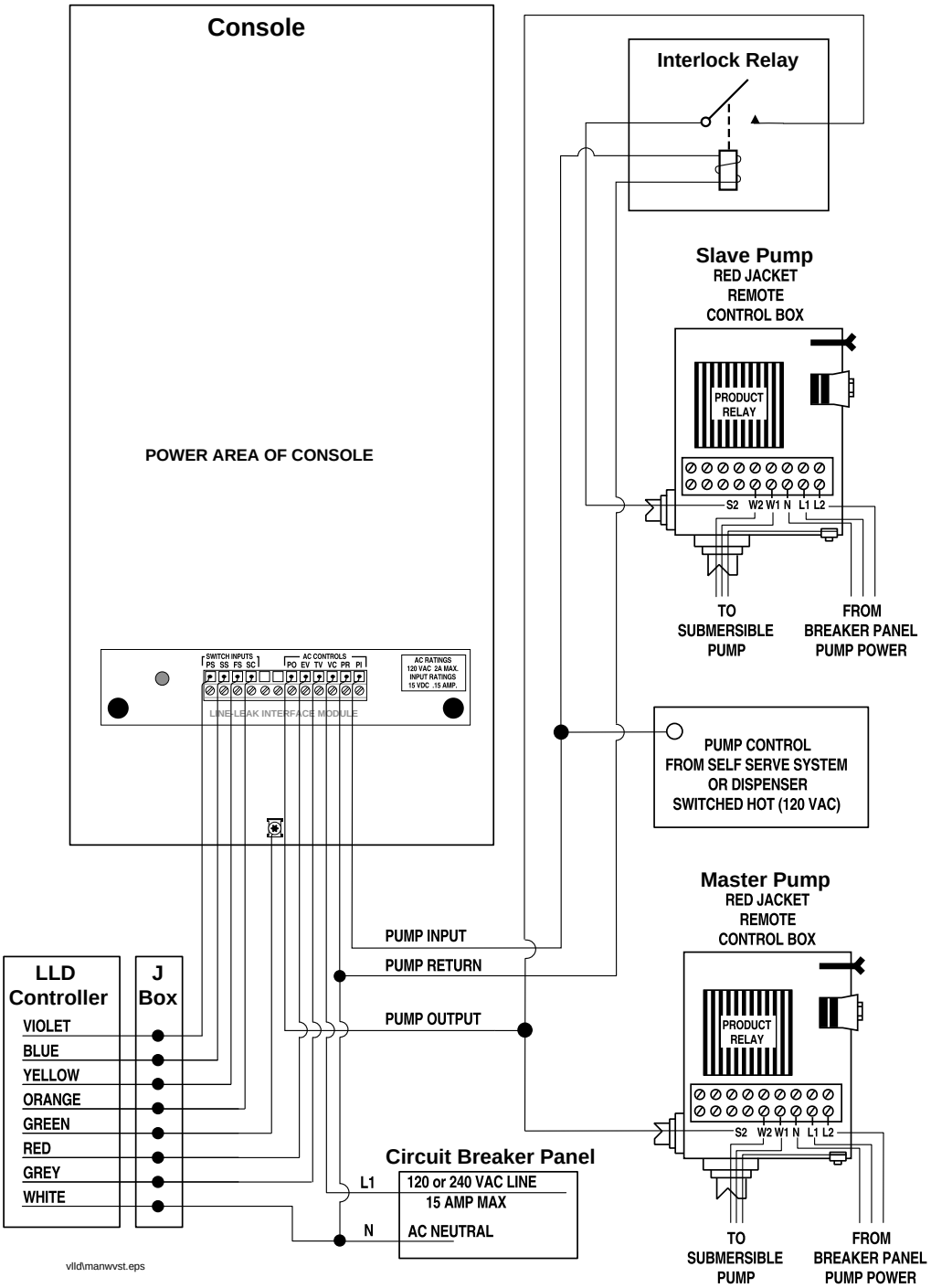

Figure 21. Manifolded Product Lines VLLD Wiring Diagram-Single Tank/Dual Pumps

Checking the System

WARNING Tags

Ten “WARNING” tags (see Figure 22) have been provided with the VLLD.

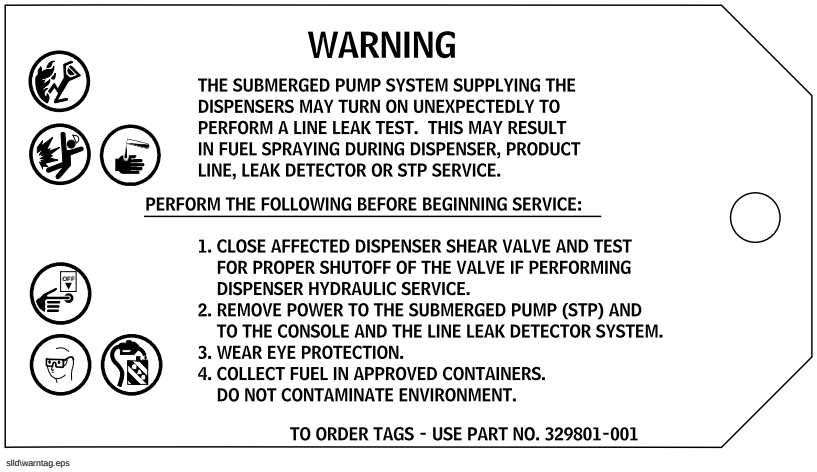

Figure 22. WARNING Tag

For your safety and the safety of others who may service dispensers, submersible pumps or VLLDs, you must attach a tag to or near each of the following items in a location such that it will be likely read before starting service:

- ❑ TLS-350 or TLS-350R console
- ❑ Submersible pump
- ❑ Each dispenser filter

Additional tags may be ordered per the instructions on the tag.

Plumbing Checkout

Important ☞ ***Do not*** *turn on power to the TLS-350 or TLS-350R console. This must be done by an authorized Veeder-Root distributor during the warranty checkout and start-up procedure!*

To perform plumbing checkout:

1. Turn on power to the submersible pump.

Important ☞ *Failure to purge air from the lines can cause the system to falsely indicate leaks or create other problems.*

2. Purge air from the product lines as follows:

a. Turn on the dispenser farthest from the tank.

b. Wait approximately 2 minutes.

c. Pump 10 to 20 gallons, or until no more air is present.

d. Repeat these steps for each dispenser, working from the farthest from the tank to the closest to the tank.

3. Carefully check all fittings for leaks.
4. Tighten any leaking fittings until the leak is stopped. **Be careful** not to overtighten and strip the threads.
5. If the leak cannot be stopped, turn off power to the submersible and check the fitting for thread damage or improper sealing.
6. Replace or reseal the fitting as required.

Volumetric Line Leak Detector Checkout Procedure

1. TLS-350 or TLS-350R System must be completely wired before proceeding with Volumetric Line Leak Detector (VLLD) Start-Up Procedure.
2. Inspect all wiring to ensure that installation conforms with Veeder-Root Installation and Intrinsic Safety Requirements. See *TLS-350 or TLS-350R Site Preparation and Installation Instructions for additional information.*

Important ☞ *Improper wiring of the VLLD Controllers can result in irreversible damage to the VLLD Controller and the Volumetric Line Leak Detect Module.*

⚠ WARNING

Fire or explosion could occur if Volumetric Line Leak Detect (VLLD) Controller or other wires share conduits or troughs with TLS-350 or TLS-350R Intrinsically Safe Probe, Sensor and Thermistor wiring.

Conduits and wiring troughs from TLS-350 or TLS-350R Probes, Sensors, and Thermistors must NOT contain any other wires.

3. Turn power on to submersible pumps, VLLD Controllers, and TLS-350 or TLS-350R monitor. Do not program TLS-350 or TLS-350R at this time.
4. Turn on each dispenser and verify that correct submersible pump is energized. When checking dispenser control, check visible portions of piping system in both the sump and dispenser areas for visible leaks.
5. Purge all piping between submersible pumps and dispensers following Pump Manufacturer's recommendations.

Important ☞ *The Veeder-Root Volumetric Line Leak Components will not effect the purging of the submersible pump/dispenser piping system.*

Do not disconnect the flexible fuel control lines between the VLLD Controller and the check valve assembly in an attempt to purge the VLLD Controller.

6. Program the TLS-350 or TLS-350R Console including the Volumetric Line Leak portion of the system. See TLS-350 or TLS-350R System Setup Instructions for the proper setup procedures.

Important ☞ *Once the programming of the TLS Console has begun, do not allow gasoline dispenser to be turned on unless instructed to do so by this procedure.*

Purging the VLLD Controller

1. Close the shut-off valve on each submersible pump product line.
2. Run the Air Purge Procedure in the Normal Mode for each product line to ensure the VLLD Controller is properly purged as shown.

From NORMAL MODE:

a. Press FUNCTION to display the message:

```
START LINE LEAK TEST
PRESS <STEP> TO CONTINUE
```

b. Press STEP. The system displays the message:

```
START LEAK TEST METHOD
ALL LINES
```

c. Press STEP. The system displays the message:

```
TEST RATE: ALL LINES
0.20 GAL / HR
```

d. Press CHANGE. The system displays the message:

```
TEST RATE: ALL LINES
0.10 GAL / HR
```

e. Press CHANGE. The system displays the message:

```
TEST RATE: ALL LINES
AIR PURGE PROCEDURE
```

f. Press ENTER. The system displays the message:

```
START LEAK TEST: ALL LINES
PRESS <ENTER>
```

g. Press ENTER to begin the test on all the lines.

h. To exit this function or cancel the test, press STEP.

Important ☞ *The system will automatically run ten 3 GPH self tests*

Do not allow anyone to turn on a pump handle when performing the Air Purge Procedure. Turning on a pump will not allow this procedure to be performed.

Testing the VLLD System

Important ☞ *This test does not completely test the underground piping system, only the portion between the submersible pump and shut-off valve.*

1. Leave the shutoff valves closed on all the submersible pump product lines.
2. Turn on a dispenser of the same product that you want to run the test on. **Do not dispense any fuel; wait 5 seconds and turn the dispenser off.**

Important ☞ *This step will cause the TLS Console to initiate an automatic 3 GPH test. This test will last approximately 2 minutes.*

If any one of the product lines fails this test, check visible portions of piping between the VLLD Check Valve Assembly and the shut-off valve for visible leaks white the submersible pump is running. If no leaks are found, consult Veeder-Root for further assistance.

3. Leave the dispensers idle and the TLS System will now run a 0.2 GPH test. Wait time (minimum 20 minutes) plus 12 minutes of test time are required for this test.

4. A passed test, during this part of the procedure, for each of the product lines indicates that the Line Leak Detector system is wired and operating properly. However, it does not indicate that the entire piping system is free of leaks.

Testing the Piping System

1. Open the shut-off valves on the submersible pump product lines.
2. Run a manual 0.2 GPH test on each product line using the following procedure:

Important ☞ *Do not allow anyone to turn on a pump handle during this test. Turning on a pump handle will not allow this test to be performed.*

a. Starting from the ALL FUNCTIONS NORMAL display, press the FUNCTION key until START LINE LEAK TEST appears on the display.

b. Use the following flow diagram to run a 0.2 GPH leak test.

Important ☞ *If tests fail during the Piping System test on any of the product lines, check visible portions of piping including dispenser piping for visible leaks while submersible pump is running. If no leaks are found, ensure product lines are purged of air. Excessive air can cause Self Test failure.*

From NORMAL MODE:

a. Press FUNCTION to display the message:

```
START LINE LEAK TEST
PRESS <STEP> TO CONTINUE
```

b. Press STEP. The system displays the message:

```
START LEAK TEST METHOD
ALL LINES
```

c. Press STEP. The system displays the message:

```
TEST RATE: ALL LINES
0.20 GAL / HR
```

d. Press STEP. The system displays the message:

```
MAX TIME: XX MIN ALL LINES
START TEST: NO
```

e. Press CHANGE. The system displays the message:

```
MAX TIME: XX MIN ALL LINES
START TEST: YES
```

f. Press ENTER. The system displays the message:

```
START TEST: YES
PRESS <FUNCTION> TO CONT
```

g. Press FUNCTION (Line tests will start when Function Button is depressed and display will advance to next Function Code). The system displays the message:

```
STOP LINE LEAK TEST
PRESS <STEP> TO CONTINUE
```

Warranty Conditions and Limitations of Liability

Limitations Of Liability

We warrant that this product will be free from defects in materials and workmanship for a period of 1 year from the date of installation or 15 months from the date of invoice, whichever occurs first. During the warranty period, we or our representative will repair or replace the product, if determined by us to be defective, at the location where the product is in use and at no charge to the purchaser.

We shall not be responsible for any expenses incurred by the user.

This warranty applies only when the product is installed in accordance with Veeder-Root's specifications, and a Warranty Registration and Checkout Form has been filed with Veeder-Root by an Authorized Veeder-Root Distributor. This warranty will not apply to any product which has been subjected to misuse, negligence or accident; or misapplied; or used in violation of product manuals, instructions or warnings; or modified or repaired by unauthorized persons; or improperly installed.

Inspection

You shall inspect the product promptly after receipt and shall notify us at our Simsbury office in writing of any claims, including claims of breach of warranty, within 30 days after you discover or should have discovered the facts upon which the claim is based. Your failure to give written notice of a claim within the time period shall be deemed to be a waiver of such claim.

Limitation of Remedy and Warranty

The provisions of “Limitations Of Liability” on page 63 are our sole obligation and exclude all other remedies or warranties, express or implied, including warranties of MERCHANTABILITY and FITNESS FOR A PARTICULAR PURPOSE, whether or not purposes or specifications are described herein. We further disclaim any responsibility whatsoever to you or to any other person for injury to person or damage to or loss of property or value caused by any product which has been subjected to misuse, negligence, or accident; or misapplied; or used in violation of product manuals, instructions or warnings; or modified or repaired by unauthorized persons; or improperly installed.

577013-341, Revision C

Limitation of Damages

Under no circumstances shall we be liable for any incidental, consequential or specific damages, losses or expenses arising from this contract or its performance or in connection with the use of, or inability to use, our product for any purpose whatsoever.

Limitation of Actions

No action regardless of form arising out of this contract may be commenced more than 1 year after the cause of action has accrued, except an action for nonpayment.

Collateral Promises

There are no representations, warranties, or conditions, express or implied, statutory or otherwise except those herein contained, and no agreement or waivers collateral hereto shall be binding on either party unless in writing and signed by you and accepted by us at our Simsbury office.

Interpretation

Rights and liabilities arising out of any contract with us shall be determined under the Uniform Commercial Code as enacted in Connecticut.

577013-341, Revision C

Sales Offices

Veeder-Root has offices around the world to serve you.

Headquarters

Veeder-Root Company
125 Powder Forest Drive
Simsbury, CT 06070-2003 U.S.A.
(860) 651-2700 FAX: (860) 651-2719 TECH SUPPORT (860) 651-2753

England

Veeder-Root Environmental Systems Limited
Hydrex House, Garden Road
Richmond, Surrey TW9 4NR ENGLAND
44-181-392-1355

Brazil

Veeder-Root do BRASIL
Rua ado Benatti, 92
Caixa Postal 8343
01051 Sao Paulo BRAZIL
55-11-861-2155

Germany

Veeder-Root GmbH
Uhlandstrasse 49
D-78554 Aldingen GERMANY
49 (0)7424 89285

France

Veeder-Root SARL
ZI des Mardelles
94-106 rue Blaise Pascal
93600 Aulnay-sous-Bois FRANCE
33 (0)1 4879 5599

Canada

Veeder-Root Canada
151 Superior Boulevard, Suite 24
Mississauga, Ontario, L5T 2L1 CANADA
905-670-2755

Singapore

Veeder-Root Singapore
#2 Kallang Pudding Road
#06-16 Mactech Industrial Building
SINGAPORE 1334
(65) 745-0368 FAX: (65) 745-0636

Mexico

Veeder-Root Mexico
Prado de las Camelias
No. 4483-4
Prados Tepeyac C.P. 45500
Zapopan, Jal., MEXICO
(52) 36-47-3750