GASBOY

Atlas® Fuel Systems

Installation Manual

MDE-4331T

Computer Programs and Documentation

All Gasboy computer programs (including software on diskettes and within memory chips) and documentation are copyrighted by, and shall remain the property of, Gasboy. Such computer programs and documents may also contain trade secret information. The duplication, disclosure, modification, or unauthorized use of computer programs or documentation is strictly prohibited, unless otherwise licensed by Gasboy.

Approvals

Gasboy, Greensboro, is an ISO 9001:2000 registered facility.

Underwriters Laboratories (UL):

UL File#	Products listed with UL
MH4314	All dispensers and self-contained pumping units
MH10581	Key control unit, Model GKE-B Series
	Card reader terminals, Models 1000, 1000P
	Site Controller, Model 2000S CFN Series
	Data entry terminals, Model TPK-900 Series
	Fuel Point Reader System

California Air Resources Board (CARB):

Executive Order #	Product
G-70-52-AM	Balance Vapor Recovery
G-70-150-AE	VaporVac

National Conference of Weights and Measures (NCWM) - Certificate of Compliance (CoC):

Gasboy pumps and dispensers are evaluated by NCWM under the National Type Evaluation Program (NTEP). NCWM has issued the following CoC:

CoC#	Product	Model #	CoC#	Product	Model #	CoC#	Product	Model #
95-179	Dispenser	9100 Retail Series, 8700 Series, 9700 Series	91-019	Dispenser	9100 Commercial Series	05-002	Atlas	8700K, 8800K, 9100K, 9200K, 9800K
95-136	Dispenser	9800 Series	91-057	Controller	1000 Series FMS, 2000S-CFN Series			

Trademarks

Non-registered trademarks

Consola™
Infinity™
TopKAT™
Super-Hi™
System 1000™
Ultra-Hi™
GOLD℠

Registered trademarks

ASTRA®
Atlas®
Fuel Point®
Gasboy®
Keytrol®
Slimline®
Gilbarco®
G-SITE®

Additional US and foreign trademarks pending.

Other brand or product names shown may be trademarks or registered trademarks of their respective holders.

Supplier's Declaration of Conformity
47 CFR § 2.1077 Compliance Information

Unique Identifier: Atlas 9800

Responsible Party - U.S. Contact Information

7300 W. Friendly Ave.
Greensboro, NC
27410, USA

https://www.gasboy.com/us/content/contact-us-gasboy

Federal Communications Commission (FCC) Compliance Statement

This device complies with Part 15 of the FCC Rules. Operation is subject to the following two conditions:
(1) This device may not cause harmful interference, and
(2) this device must accept any interference received, including interference that may cause undesired operation.

FCC Warning

This equipment has been tested and found to comply with the limits for a Class A digital device pursuant to Part 15 of the FCC Rules. These limits are designed to provide reasonable protection against harmful interference when the equipment is operated in a commercial environment. This equipment generates, uses, and can radiate radio frequency energy, and if not installed and used in accordance with the instruction manual, may cause harmful interference to radio communications. Operation of this equipment in a residential area is likely to cause harmful interference in which case the user will be required to correct the interference at his own expense. Changes or modifications not expressly approved by the manufacturer could void the user's authority to operate this equipment.

This document is subject to change without notice.
http://www.gasboy.com
© 2023 GASBOY. All Rights Reserved.

Table of Contents

1 – Introduction 1-1

Purpose . . . 1-1
Intended Users . . . 1-1
General Description . . . 1-2
Atlas Commercial Electronic Series . . . 1-2
Atlas Commercial Mechanical Series . . . 1-3
Atlas Model Codes . . . 1-3
Shipping Weight . . . 1-4
Operating Environment . . . 1-4
Operating Environment - Special Considerations for DEF Dispensers . . . 1-4
Operating Environment for DEF Unit . . . 1-4
Load Table Reference Locations . . . 1-4
Related Documents . . . 1-5
Abbreviations and Acronyms . . . 1-5
Common Terms Used . . . 1-6
Warranty . . . 1-6

2 – Important Safety Information 2-1

3 – Hazardous Locations 3-1

Classifying Hazardous Locations . . . 3-1
Important Considerations for DEF Dispensers . . . 3-2

4 – Control Lines for Atlas Electronic Series 4-1

Purpose . . . 4-1
Grounding . . . 4-1
Micro Feed . . . 4-2
Micro Neutral . . . 4-2
Auth/Pump Motor Feed (Self-contained Pumping Units) . . . 4-2
External Valve . . . 4-3
Neutral Feed . . . 4-3
Auth Input Dispensers . . . 4-3
Units with Standard Submersible Starter Drive (Subm Starter Drive) . . . 4-3
Units with Submersible Pump Drive Relay Option . . . 4-4
Submersible Starter Drive (Subm Starter Drive) . . . 4-4
Submersible Pump Drive (Subm Pump Drive) . . . 4-4
Reset Complete (Switch Detect)/Slow Flow . . . 4-5
Fast Flow Valve . . . 4-5
Phase 2 Feed . . . 4-5
Slow/Fast Satellite Return . . . 4-5
Light Feed . . . 4-6
Light Neutral . . . 4-6
Heater Feed (Cold Weather DEF units) . . . 4-6
Heater Neutral (Cold Weather DEF units) . . . 4-6
Pulser . . . 4-7

RS-485 4-7
Local Area Network (LAN)/Wide Area Network (WAN) 4-8

5 – Control Lines for Atlas Mechanical Series 5-1

Purpose 5-1
Grounding 5-1
Reset Motor Feed 5-2
Pump Motor Feed 5-2
Return (Neutral) 5-2
Submersible Feed, Submersible Drive 5-2
Reset Complete (Switch Detect)/Slow Flow 5-2
Fast Flow 5-3
Light Feed 5-3
Light Neutral 5-3
Phase 2 Feed 5-3
Pulser 5-3

6 – Installation 6-1

Purpose 6-1
Required Equipment and Materials 6-1
Important Requirements for E85 Units 6-1
Important Considerations when Changing Fuel Types 6-2
Read NFPA 30A and NFPA 70 6-4
Preparing for Installation 6-4
Before Placing Unit on Fuel Island 6-6
Verifying and Determining Plumbing Requirements 6-6
Determining the Unit Orientation 6-6
Determining the Unit Side and Type 6-6
Adapting Pit Box 6-7
Lifting Units 6-7
Lifting Units with Forklift 6-7
Connecting Pump/Dispenser Inlet Pipes 6-8
Model 9850KXTW1 Shear Valve Configuration 6-10
OPW Shear Valve for 9862KXTW1 DEF Unit 6-11
Anchoring Pump/Dispenser to Island 6-12
Connecting Vapor Return Line to Vapor Shear Valve 6-14
Wiring Dispenser (STP-supplied Unit) for All Models 6-15
Preparing Field Wiring 6-15
Wiring Pump (Self-contained Unit) for All Models 6-16
Preparing Field Wiring 6-16
Testing New Field Wiring 6-17
Completing Field Wiring 6-18
Installing Breakaways, Hoses, Swivels, and Nozzles 6-18
Units with Hose Retrievers 6-19
DEF Dispensers - ZVA™ DEF Nozzle 6-20
DEF Nozzle (M10257B001, M10257B002, M10257B003, and M10257B004) . . . 6-20
Do Not Turn on AC Power 6-21
Purging Air from System 6-22
For New Dispensers (Purging Through Shear Valve) 6-22

For New and Existing Pumps and Dispensers with Fuel in Lines (Purging Through Nozzle) . . . 6-23
Installation Checklists . . . 6-24
Mechanical and Hydraulic Related Items . . . 6-24
Electrical Related Items . . . 6-25
Calibration . . . 6-25
Adjusting Calibration for Standard, Hi-Flow, and Super-Hi Models . . . 6-26
Calibration Adjustment for Ultra-Hi Models . . . 6-27
Calibration Adjustment for E85/DEF Units [Electronic Calibration (E-CAL)] . . . 6-28
Calibration and Accuracy Checks - DEF Dispensers . . . 6-31

7 – Reference Information 7-1

Reference Contents . . . 7-1
Electrical Requirements . . . 7-2
Emergency Power Cut-off Switch . . . 7-2
Circuit Breakers . . . 7-2
STP Control Relay Boxes for Dispensers . . . 7-3
STP Isolation Relays for Electronic Dispensers . . . 7-3
Conduit . . . 7-3
Wiring . . . 7-4
Wire Size . . . 7-4
Wiring . . . 7-4
Atlas Commercial . . . 7-4
Atlas Retail . . . 7-5
Retail Data Wire Lengths . . . 7-5
Commercial Data Wire Lengths . . . 7-5
Grounding . . . 7-6
CPU Switch Settings . . . 7-7
Sealing ‘Y’ Fittings . . . 7-7
Field Wiring Requirements (LAN/WAN) . . . 7-8
Plumbing Requirements . . . 7-9
Pipe Installation . . . 7-9
Pipe Size . . . 7-9
Pumps (Standard Flow) . . . 7-10
Pumps (High Flow, Super-Hi, Ultra-Hi) . . . 7-10
Piping and Plumbing Components (DEF) . . . 7-10
Dispensers (Standard Flow) . . . 7-10
Dispensers (High Flow, Super-Hi, and Ultra-Hi) . . . 7-10
Check Valves . . . 7-10
Shear Valves . . . 7-11

8 – Start-up and Test for Atlas Electronic Series 8-1

Installation Completion Checklist . . . 8-1
Start-up . . . 8-2

9 – Start-up for Atlas Mechanical Series 9-1

Installation Completion Checklist . . . 9-1
Start-up . . . 9-1
Power Reset External Adjustment . . . 9-2

Appendix: Atlas Diagrams A-1

Elevation Diagrams A-1
Foundation Diagrams A-3

Index Index-1

1 – Introduction

Purpose

This manual provides step-by-step instructions for installing Atlas® pumps and dispensers. This manual does not include site preparation instructions. For site preparation instructions, refer to *MDE-4333 Atlas Fuel Systems Site Preparation Manual*.

⚠ CAUTION

Certain special alternative fuels, such as E85 and additives, can degrade pump/dispenser performance or integrity if the dispensers are not designed for use with such fuels. Additionally, converting to certain standard fuels (gasoline, diesel, kerosene, and so on) from alternative fuels, such as those with ethanol (E85), methanol, or biodiesel, or from alternative fuels to standard fuels can degrade dispenser performance or integrity. Similar effects can also occur when converting units to different standard fuel types. As per Underwriters Laboratories (UL®) 87A requirements, nozzles dispensing E85 fuel and Diesel Exhaust Fluid (DEF) must not be used to dispense any other type of fuel such as gasoline.

Leaks and potential environmental hazards can result or components may fail prematurely.

To avoid these issues, follow the guidelines provided for dispensing E85 fuel and DEF in this manual.

Intended Users

This manual is intended for Authorized Service Contractors (ASCs) who will be involved in the installation of Atlas pumps and dispensers.

⚠ CAUTION

The unit is shipped with the hose elbow facing upward. Ensure to install the unit with the hose elbow facing downward.

General Description

Atlas Commercial Electronic Series

Gasboy® Atlas dispensing units are UL-listed and are available in a self-contained (suction pump) or remote-controlled (dispenser) package. Both packages offer a variety of models that are available as single-hose outlets or dual-hose outlets (with single or dual product capability). The following self-contained models are available:

- Standard Flow (SF) models up to 15 GPM, 56 LPM, 12 IPM
- High Flow (HF) models up to 22 GPM, 83 LPM, 18 IPM
- Single-hose Super-Hi™ Flow (SHF) models up to 40 GPM, 151 LPM, 33 IPM
- Single-hose Ultra-Hi™ Flow (UHF) models up to 50 GPM, 189 LPM, 42 IPM

The rate of delivery for remote-controlled packages varies based on the size of the submersible pump, as well as the choice of the hanging hardware, including the nozzle type. The delivery rate of both packages also varies depending on installation conditions and additional accessories.

The difference between commercial and retail pumps/dispensers can be visually identified. Commercial pumps/dispensers have only one visual port for gallons/liters on a side(s), while retail pumps/dispensers have visual ports for both gallons/liters and cost per gallon/liter.

The Atlas series pumps/dispensers offer the following features:

Models	Suction Pumps	Remote Dispensers	Features
SF Mechanical Commercial SF Electronic Commercial	9152K, 9152KTW1, 9152KTW2 9852K, 9852KTW1, 9852KTW2	9152KX, 9152KXTW1, 9152KXTW2 9852KX, 9852KXTW1, 9852KXTW2	• Inlet: 1-1/2-inch National Pipe Taper (NPT) female threads • Discharge: 1-inch NPT female threads (can be reduced to 3/4-inch with bushing) • Motor: (self-contained) 3/4 HP continuous duty
SF Mechanical Retail	8752K, 8752KTW1, 8752KTW2	8752KX, 8752KXTW1, 8752KXTW2	
SF Electronic Retail	8852K, 8852KTW1, 8852KTW2	8852KX, 8852KXTW1, 8852KXTW2	
HF Mechanical Commercial	9153K, 9153KTW2	9153KX, 9153KXTW2	• Inlet: 1-1/2-inch NPT female threads • Discharge: 1-inch NPT female threads • Motor: (self-contained) 3/4 HP continuous duty
HF Electronic Commercial	9853K, 9853KTW2	9853KX, 9853KXTW2	
HF Mechanical Retail	8753K, 8753KTW2	8753KX, 8753KXTW2	
HF Electronic Retail	8853K, 8853KTW2	8853KX, 8853KXTW2	
SHF Mechanical Commercial	9140K	9140KX	• Inlet: 2-inch NPT female threads • Discharge: 1-inch NPT female threads • Motor: (self-contained) (2) 3/4 HP continuous duty
SHF Electronic Commercial	9840K	9840KX	
UHF Electronic Commercial	9850K	9850KX, 9850KXTW2	• Inlet: 2-inch NPT female threads • Discharge: 1-inch NPT female threads • Motor: (self-contained) 1-1/2 HP continuous duty
SF Electronic Commercial E85 Unit		9872KX, 9872KXTW1	• Inlet: 1-1/2-inch NPT female threads • Discharge: 3/4-inch NPT female threads
DEF Electronic Commercial DEF Unit		9862KX	• Bottom Inlet: 1-inch British Standard Pipe Parallel (BSPP) female threads • Side Inlet: 1-inch BSPP male threads • Discharge: 1-inch BSPP male threads

Atlas Commercial Mechanical Series

Atlas commercial mechanical series dispensing units are UL-listed and are available in a self-contained (suction pump) package or remote-controlled (dispenser) package. Both packages offer a variety of models that are available as single-hose outlets or dual-hose outlets (with single or dual product capability). The following self-contained models are available:

- Standard speed, up to 15 GPM/56 LPM
- High speed, up to 22 GPM/83 LPM
- As a single-hose model with high capacity speed up to 26 GPM/99 LPM.

Note: DEF unit is a standard speed unit.

The rate of delivery for remote-controlled packages varies based on the size of the submersible pump and plumbing to the dispenser. The delivery rate of both packages also varies depending on installation conditions and additional accessories.

All models of the Atlas commercial mechanical series offer mechanical non-computers, complete with electric resets. Mechanical pump registers display the total volume for a delivery. All non-computers read up to 999.9 gallons/liters.

Atlas Model Codes

Atlas Model Codes						
Digit	**1 and 2**	**3**	**4**	**5**	**6**	**Pumps 6-8 or Dispenser 7-9**
	Product Series	**Model Type**	**Flow Rates**	**Atlas**	**Pump/Dispenser**	**Hydraulic Configuration**
Product Series						
Retail Mechanical	87					
Retail Electronic	88					
Commercial Mechanical	91					
Commercial Electronic	98					
Model Type						
Super-Hi		4				
Standard, High-Flow, Ultra-Hi		5				
DEF Dispenser		6				
E85 Dispenser		7				
Flow Rates						
Super-Hi (40 GPM)/Ultra-Hi (50 GPM)			0			
Standard-Flow (10-15 GPM)			2			
High-Flow (18-22 GPM)			3			
Atlas Model Designation				K		
Pump/dispenser						
Self-contained Pump					Blank	
Dispenser					X	
Hydraulic Configuration						
1-Grade, 1-Hose						Blank
1-Grade, 2-Hose						TW1
2-Grade, 2-Hose						TW2
Combo (Ultra-Hi only)						TW3

Shipping Weight

The Atlas shipping weights listed below are approximate values, as shipping weights vary for different models:

Note: If the unit includes the PRIME option, add 10 lbs. per PRIME panel to the weight listed.

- Standard, Hi, and Super-Hi Dispenser: 315 lbs
- Standard, Hi, and Super-Hi Pump: 325 lbs
- Ultra-Hi Combo Pump with Satellite Piping: 503 lbs
- Ultra-Hi Dual Dispenser with Satellite Piping: 414 lbs
- TopKAT™ PLUS with Receipt printer: 41 lbs
- Atlas DEF 9862KX Dispenser: 361 lbs
- Atlas DEF 9862KXWW Dispenser: 355 lbs

Operating Environment

Environment	Range
Relative Humidity	20 to 95% non-condensing
Minimum Ambient Temperature	-22 °F (-30 °C)
Maximum Ambient Temperature	131 °F (55 °C)

Operating Environment - Special Considerations for DEF Dispensers

⚠ CAUTION

DEF freezes at approximately 11 °F (-11.5 °C). Power to the dispenser and heater must always remain ON in cold weather. If power is lost and the temperature drops below this point within the DEF cabinet, the system must be inspected for freeze damage before restart.

Operating Environment for DEF Unit

Unit	Range
Cold Weather Unit	-22 °F (-30 °C) to 131 °F (55 °C)
Warm Weather Unit	15 °F (-9.4 °C) to 131 °F (55 °C)

Load Table Reference Locations

Model	Unit	Field Wiring Diagram
Atlas	Dispenser	FE-356 Atlas Pump and Dispenser Field Wiring
Atlas	Pump	FE-357 Atlas Pump Retail/Commercial Field Wiring

Related Documents

Document Number	Title	GOLD℠ Library
C36600	Gasboy Series 9800Q Pumps and Dispensers Diagnostic Manual	Gasboy Q, A&E Series Pumps/Dispensers
FE-356	Atlas Pump and Dispenser Field Wiring	Gasboy Parts List and Wiring Diagrams
FE-357	Atlas Pump Retail/Commercial Field Wiring	Gasboy Parts List and Wiring Diagrams
MDE-4255	Gasboy Warranty Policy Statement for USA and Canada	• Domestic Warranty and Owners Manuals • Gasboy Safety and Warranty Docs • Gasboy Policy Documents
MDE-4333	Atlas Fuel Systems Site Preparation Manual	Gasboy Atlas Pumps/Dispensers
MDE-4334	Commercial and Retail Series Atlas Start-up/Service Manual	Gasboy Atlas Pumps/Dispensers
MDE-4363	Atlas Fuel Systems Owner's Manual	Gasboy Atlas Pumps/Dispensers
MDE-5013	TopKAT PLUS Installation Manual	Gasboy Series 1000/ Fleetkey and Topkat
MDE-5411	ForeHB Islander PRIME Installation Manual	Gasboy Fleet PRIME
MDE-5414	ForeHB SiteOmat Setup and Maintenance Manual	Gasboy Atlas PRIME
PT-1949	Commercial and Retail Series Atlas Pump and Dispenser Illustrated Parts Manual	Gasboy Atlas Pumps/Dispensers
PT-1950	Atlas Recommended Spare Parts List	Gasboy Atlas Pumps/Dispensers
PT-1960	Gasboy Fleet Plus Recommended Spare Parts	Gasboy Fleet PLUS System
PT-1963	Gasboy PLUS and PRIME Illustrated Spare Parts Manual	Gasboy Fleet PLUS System

Abbreviations and Acronyms

Term	Description
ASC	Authorized Service Contractor
AST	Aboveground Storage Tank
ASTM	American Society for Testing and Materials
BSPP	British Standard Pipe Parallel
CFN	Cash Flow Network
CPU	Central Processing Unit
D-Box	Distribution Box
DEF	Diesel Exhaust Fluid
DIP	Dual In-line Package
E-CAL	Electronic Calibration
FMS	Fuel Management System
GFI	Ground Fault Interrupter
GOLD	Gilbarco® Online Documentation
GPM	Gallons per Minute
HDPE	High Density Polyethylene
HF	High Flow
J-box	Junction Box
LAN	Local Area Network
LPM	Liters per Minute

Term	Description
LSD	Least Significant Digit
MSD	Most Significant Digit
NCWM	National Conference on Weights and Measures
NEC®	National Electrical Code
NFPA	National Fire Protection Association
NPT	National Pipe Taper
NTEP	National Type Evaluation Program
PCB	Printed Circuit Board
SF	Standard Flow
SHF	Super-Hi Flow
STP	Submersible Turbine Pump
TFR-ISO	Top Front Right Isometric
UHF	Ultra-Hi Flow
UL	Underwriters Laboratories
UST	Underground Storage Tank
W&M	Weights and Measures
WAN	Wide Area Network

Common Terms Used

Term	Description
Combo	This unit is configured as master on one side and satellite on the other.
Dispenser	A dispensing device that receives fuel under pressure from the Underground Storage Tank [UST (if underground)] through a Submersible Turbine Pump (STP) or from an Aboveground Storage Tank (AST) using an aboveground pump located at the tank.
Grade	Fuel that is dispensed and has an assigned price.
Listed	Products bearing the authorized listing mark of UL as the manufacturer's declaration, which implies that the product complies with UL's requirements and is in accordance with terms of the UL's Listing and Follow-Up Service agreement.
Master	This unit dispenses fuel to one saddle tank and to a second saddle tank through a satellite unit.
Pump	A dispensing device that utilizes a self-contained pumping unit and motor to move fuel from a storage tank using suction.
Product	Fuel in the storage tank.
Satellite	A dispensing unit that receives the product from a master unit and registers at the master unit, allowing both saddle tanks on a vehicle to be filled at the same time.
Urea	Urea is a non-flammable liquid chemical from a separate tank that chemically interacts with exhaust to reduce emissions to nitrogen and water. Urea is used in DEF.

Warranty

For information on warranty, refer to *MDE-4255 Gasboy Warranty Policy Statement for USA and Canada*. If you have any warranty related questions, contact Gasboy's Warranty Department at Greensboro, N.C. location.

2 – Important Safety Information

Notes: 1) Save this Important Safety Information section in a readily accessible location.

2) Although DEF is non-flammable, diesel is flammable. Therefore, for DEF cabinets that are attached to diesel dispensers, follow all the notes in this section that pertain to flammable fuels.

This section introduces the hazards and safety precautions associated with installing, inspecting, maintaining or servicing this product. Before performing any task on this product, read this safety information and the applicable sections in this manual, where additional hazards and safety precautions for your task will be found. Fire, explosion, electrical shock or pressure release could occur and cause death or serious injury, if these safe service procedures are not followed.

Preliminary Precautions

You are working in a potentially dangerous environment of flammable fuels, vapors, and high voltage or pressures. Only trained or authorized individuals knowledgeable in the related procedures should install, inspect, maintain or service this equipment.

Emergency Total Electrical Shut-Off

The first and most important information you must know is how to stop all fuel flow to the pump/dispenser and island. Locate the switch or circuit breakers that shut off all power to all fueling equipment, dispensing devices, and Submerged Turbine Pumps (STPs).

WARNING

The EMERGENCY STOP, ALL STOP, and PUMP STOP buttons at the cashier's station WILL NOT shut off electrical power to the pump/dispenser. This means that even if you activate these stops, fuel may continue to flow uncontrolled.

You must use the TOTAL ELECTRICAL SHUT-OFF in the case of an emergency and not the console's ALL STOP and PUMP STOP or similar keys.

Total Electrical Shut-Off Before Access

Any procedure that requires access to electrical components or the electronics of the dispenser requires total electrical shut off of that unit. Understand the function and location of this switch or circuit breaker before inspecting, installing, maintaining, or servicing Gasboy equipment.

Evacuating, Barricading and Shutting Off

Any procedure that requires access to the pump/dispenser or STPs requires the following actions:

- An evacuation of all unauthorized persons and vehicles from the work area
- Use of safety tape, cones or barricades at the affected unit(s)
- A total electrical shut-off of the affected unit(s)

Read the Manual

Read, understand and follow this manual and any other labels or related materials supplied with this equipment. If you do not understand a procedure, call a Gasboy Authorized Service Contractor or call the Gasboy Support Center at 1-800-444-5529. It is imperative to your safety and the safety of others to understand the procedures before beginning work.

Follow the Regulations

Applicable information is available in National Fire Protection Association (NFPA) 30A; *Code for Motor Fuel Dispensing Facilities and Repair Garages*, NFPA 70; *National Electrical Code (NEC)*, Occupational Safety and Health Administration (OSHA) regulations and federal, state, and local codes. All these regulations must be followed. Failure to install, inspect, maintain or service this equipment in accordance with these codes, regulations and standards may lead to legal citations with penalties or affect the safe use and operation of the equipment.

Replacement Parts

Use only genuine Gasboy replacement parts and retrofit kits on your pump/dispenser. Using parts other than genuine Gasboy replacement parts could create a safety hazard and violate local regulations.

Safety Symbols and Warning Words

This section provides important information about warning symbols and boxes.

Alert Symbol

This safety alert symbol is used in this manual and on warning labels to alert you to a precaution which must be followed to prevent potential personal safety hazards. Obey safety directives that follow this symbol to avoid possible injury or death.

Signal Words

These signal words used in this manual and on warning labels tell you the seriousness of particular safety hazards. The precautions below must be followed to prevent death, injury or damage to the equipment:

DANGER: Alerts you to a hazard or unsafe practice which will result in death or serious injury.

WARNING: Alerts you to a hazard or unsafe practice that could result in death or serious injury.

CAUTION with Alert symbol: Designates a hazard or unsafe practice which may result in minor injury.

CAUTION without Alert symbol: Designates a hazard or unsafe practice which may result in property or equipment damage.

Working With Fuels and Electrical Energy

Prevent Explosions and Fires

Fuels and their vapors will explode or burn, if ignited. Spilled or leaking fuels cause vapors. Even filling customer tanks will cause potentially dangerous vapors in the vicinity of the dispenser or island.

DEF is non-flammable. Therefore, explosion and fire safety warnings do not apply to DEF fluid lines.

No Open Fire

Open flames from matches, lighters, welding torches or other sources can ignite fuels and their vapors.

No Sparks - No Smoking

Sparks from starting vehicles, starting or using power tools, burning cigarettes, cigars or pipes can also ignite fuels and their vapors. Static electricity, including an electrostatic charge on your body, can cause a spark sufficient to ignite fuel vapors. Every time you get out of a vehicle, touch the metal of your vehicle, to discharge any electrostatic charge before you approach the dispenser island.

Working Alone

It is highly recommended that someone who is capable of rendering first aid be present during servicing. Familiarize yourself with Cardiopulmonary Resuscitation (CPR) methods, if you work with or around high voltages. This information is available from the American Red Cross. Always advise the station personnel about where you will be working, and caution them not to activate power while you are working on the equipment. Use the OSHA Lockout/Tagout procedures. If you are not familiar with this requirement, refer to this information in the service manual and OSHA documentation.

Working With Electricity Safely

Ensure that you use safe and established practices in working with electrical devices. Poorly wired devices may cause a fire, explosion or electrical shock. Ensure that grounding connections are properly made. Take care that sealing devices and compounds are in place. Ensure that you do not pinch wires when replacing covers. Follow OSHA Lockout/Tagout requirements. Station employees and service contractors need to understand and comply with this program completely to ensure safety while the equipment is down.

Hazardous Materials

Some materials present inside electronic enclosures may present a health hazard if not handled correctly. Ensure that you clean hands after handling equipment. Do not place any equipment in the mouth.

⚠ WARNING

The pump/dispenser contains a chemical known to the State of California to cause cancer.

⚠ WARNING

The pump/dispenser contains a chemical known to the State of California to cause birth defects or other reproductive harm.

Gilbarco Veeder-Root encourages the recycling of our products. Some products contain electronics, batteries, or other materials that may require special management practices depending on your location. Please refer to your local, state, or country regulations for these requirements.

In an Emergency

Inform Emergency Personnel

Compile the following information and inform emergency personnel:

- Location of accident (for example, address, front/back of building, and so on)
- Nature of accident (for example, possible heart attack, run over by car, burns, and so on)
- Age of victim (for example, baby, teenager, middle-age, elderly)
- Whether or not victim has received first aid (for example, stopped bleeding by pressure, and so on)
- Whether or not a victim has vomited (for example, if swallowed or inhaled something, and so on)

⚠ WARNING

Gasoline/DEF ingested may cause unconsciousness and burns to internal organs. Do not induce vomiting. Keep airway open. Oxygen may be needed at scene. Seek medical advice immediately.

⚠ WARNING

DEF generates ammonia gas at higher temperatures. When opening enclosed panels, allow the unit to air out to avoid breathing vapors.
If respiratory difficulties develop, move victim away from source of exposure and into fresh air. If symptoms persist, seek medical attention.

⚠ WARNING

Gasoline inhaled may cause unconsciousness and burns to lips, mouth and lungs.
Keep airway open.
Seek medical advice immediately.

⚠ WARNING

Gasoline/DEF spilled in eyes may cause burns to eye tissue.
Irrigate eyes with water for approximately 15 minutes.
Seek medical advice immediately.

⚠ WARNING

Gasoline/DEF spilled on skin may cause burns.
Wash area thoroughly with clear water.
Seek medical advice immediately.

⚠ WARNING

DEF is mildly corrosive. Avoid contact with eyes, skin, and clothing. Ensure that eyewash stations and safety showers are close to the work location. Seek medical advice/recommended treatment if DEF spills into eyes.

IMPORTANT: Oxygen may be needed at scene if gasoline has been ingested or inhaled. Seek medical advice immediately.

Lockout/Tagout

Lockout/Tagout covers servicing and maintenance of machines and equipment in which the unexpected energization or start-up of the machine(s) or equipment or release of stored energy could cause injury to employees or personnel. Lockout/Tagout applies to all mechanical, hydraulic, chemical, or other energy, but does not cover electrical hazards. Subpart S of 29 CFR Part 1910 - Electrical Hazards, 29 CFR Part 1910.333 contains specific Lockout/Tagout provision for electrical hazards.

Hazards and Actions

WARNING

Spilled fuels, accidents involving pumps/dispensers, or uncontrolled fuel flow create a serious hazard.
Fire or explosion may result, causing serious injury or death.
Follow established emergency procedures.
DEF is non-flammable. However it can create a slip hazard. Clean up spills promptly.

The following actions are recommended regarding these hazards:

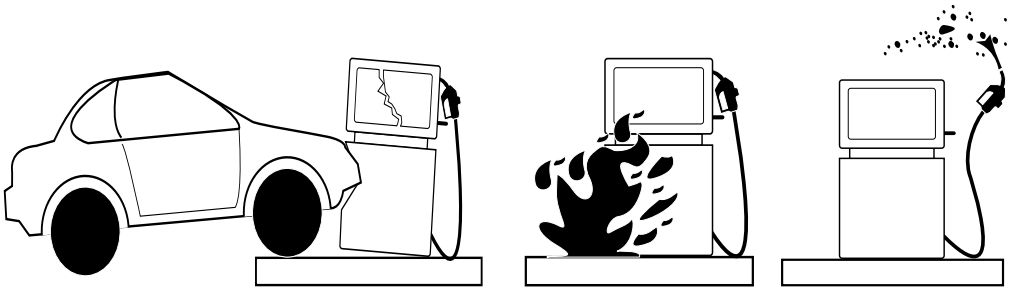

Collision of a Vehicle with Unit | Fire at Island | Fuel Spill

- Do not go near a fuel spill or allow anyone else in the area.
- Use station EMERGENCY CUTOFF immediately. Turn off all system circuit breakers to the island(s).
- Do not use console E-STOP, ALL STOP, and PUMP STOP to shut off power. These keys do not remove AC power and do not always stop product flow.
- Take precautions to avoid igniting fuel. Do not allow starting of vehicles in the area. Do not allow open flames, smoking or power tools in the area.
- Do not expose yourself to hazardous conditions such as fire, spilled fuel or exposed wiring.
- Call emergency numbers.

This page is intentionally left blank.

3 – Hazardous Locations

Classifying Hazardous Locations

Any activity (such as smoking or drilling) that can cause an explosion must be done well outside the vapor area.

Figure 3-1 is based on National Fire Protection Association (NFPA) 30A and NFPA 70®.

Figure 3-1: Hazardous Locations Diagram

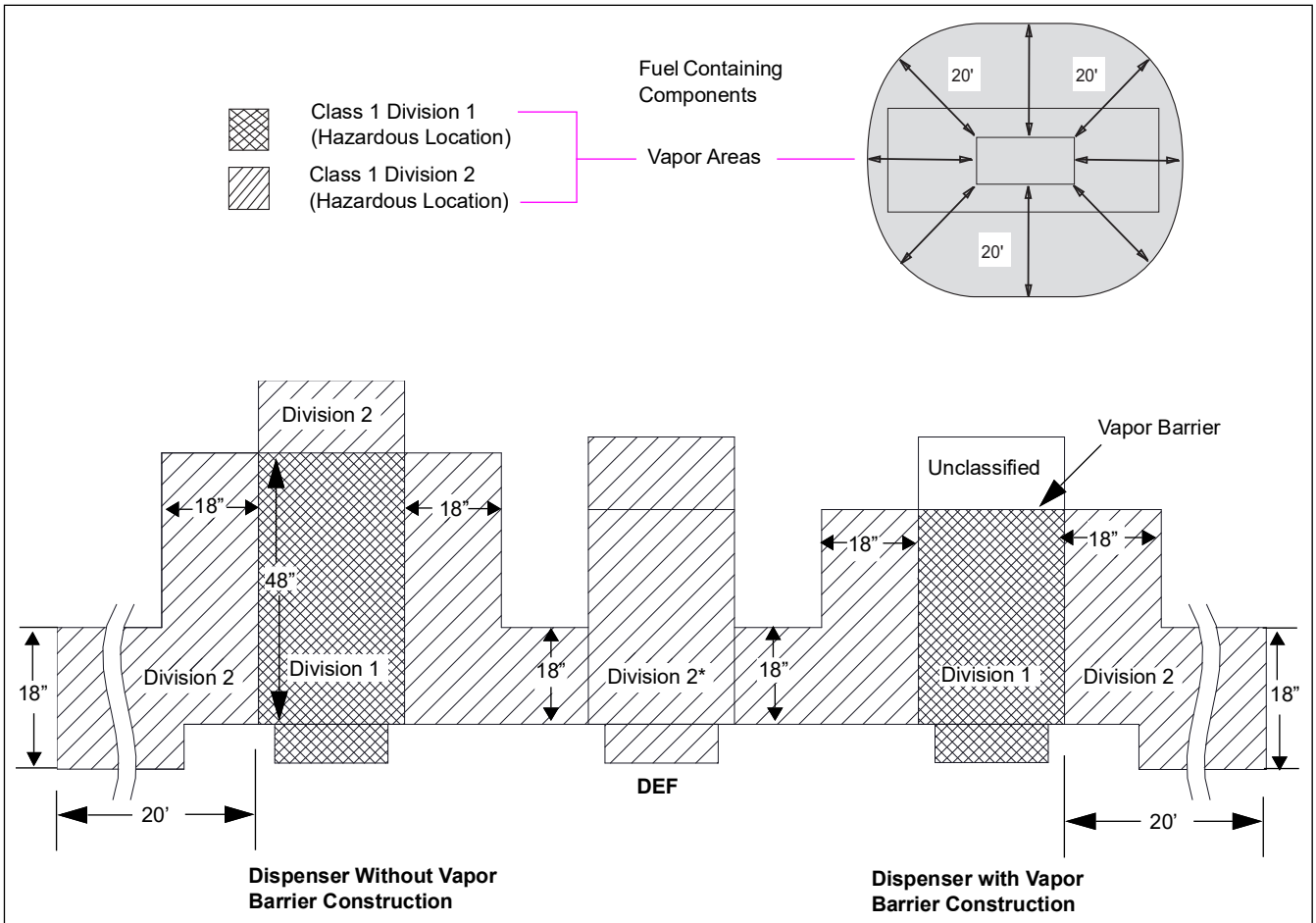

**DEF dispensers located outside the 20 feet area are unclassified.*
Notes: 1) Not applicable to DEF-only dispensers.
2) DEF is not flammable and does not generate explosive vapors. For any requirements, consult local regulatory agencies. For example, units dispensing DEF and diesel must follow the flammable fuel regulatory requirements.

Important Considerations for DEF Dispensers

⚠ CAUTION

Applicable during installation and operation of the dispenser: DEF freezes at approximately 11 °F (-11.5 °C). Power to the dispenser and heater must always remain ON in cold weather. If power is lost and the temperature drops below this point, the system must be inspected for freeze damage before restart. For sites that experience occasional power losses or for sites that are located in very cold climates, it is recommended that a backup power generator be used to maintain constant power to the dispenser. Do not use any additives to lower the freezing point of DEF. Additives of any type must not be used in DEF.

Prolonged storage at temperatures above 77 °F (25 °C) can impair the quality of DEF and reduce its shelf life.

⚠ CAUTION

DEF is mildly corrosive. It can corrode components that are made from incompatible material(s) and reduce their integrity. The use of incompatible material(s) may lead to leaks and spills, and can contaminate and degrade the DEF. When dispensing DEF, verify with the manufacturer if the material of all plumbing components are compatible with the DEF being dispensed.

⚠ CAUTION

Do not use prover cans meant for engine fuel with DEF or vice versa. Use stainless steel prover cans for DEF. DEF and engine fuel must not be mixed with each other or be contaminated by each other. Otherwise, damage to a vehicle's engine or pollution control devices can occur. DEF crystallizes as its water base evaporates. Pouring out liquid will not guarantee that no corrosive DEF remains in the prover can. DEF must not be contaminated with diesel fuel, contaminants, or other fluids or materials. Such contamination can cause serious damage to vehicle catalytic converters.

- Conventional fluid handling precautions are also applicable to DEF.
- Avoid contact with eyes, skin, and clothing. Ensure that eyewash stations and safety showers are close to the work location.
- DEF is mildly corrosive and non-flammable.
- Clean the DEF spill with water and dry the area with clean rags, especially areas that contain metallic parts. Spilt DEF can be slippery and will corrode certain types of metallic parts. Wear eye protection and rubber gloves during any cleanup activity.
- DEF is heavier than gasoline. Be aware that prover cans, containers filled with DEF, and so on, will be considerably heavier than gasoline.

4 – Control Lines for Atlas Electronic Series

Purpose

This section is provided to familiarize the installer with control inputs and outputs that are available for the Atlas electronic series dispensing unit. It is recommended that installers read these descriptions to obtain a better working knowledge of the unit to guide them in planning the site wiring. For specific wiring diagrams and installation notes, refer to "Installation" on page 6-1.

Atlas electronic series units may be provided for use with 230 VAC power for international applications. The operating voltage for control lines to these units is shown in parentheses as (230 VAC International).

If you are connecting the Atlas electronic series unit to a Gasboy Fuel Management System (FMS), refer to the following documents:

Document Number	Title	GOLD Library
MDE-4811	Islander PLUS and ICR PLUS Installation Manual	Gasboy Fleet PLUS System
MDE-4813	CFN Plus Installation Manual	Gasboy Fleet PLUS System
MDE-5013	TopKAT PLUS Installation Manual	Gasboy Fleet PLUS System
MDE-5411	ForeHB Islander PRIME Installation Manual	Gasboy Fleet PRIME
MDE-5414	ForeHB SiteOmat Setup and Maintenance Manual	Gasboy Atlas PRIME

Grounding

To ensure proper operation of the equipment and required safety factors, a good ground line must be provided. A ground wire (preferably green) must be connected between the ground wire of the system and the main electrical service panel. One earth ground connection is required per unit. The ground rod must be a solid, corrosion-resistant conductor and must be installed at the main electrical panel as per the National Electrical Code (NEC). It must be properly tied into the ground bus strip of the panel. It is recommended that neutral and ground bus strips be bonded together (unless prohibited by local codes).

Ground Fault Interrupter (GFI) breakers are required for DEF only units installed on and with a skid tank platform because of no underground piping, AC power in potentially wet area, and a potential for earth ground to become broken if skid tank moves.

A GFI works by having a sensor that detects changes in current to the load, by comparing the current owing to and from the load. A drop off in the current equivalent to about 5 mA, turns off all power by tripping a relay within the GFI within a few hundredths of a second.

When powering a dispenser with a GFI, any device that the dispenser supplies power must have its return to the same neutral as the dispenser. For example, the STP control relay.

Micro Feed

The micro feed is a 115 VAC (230 VAC international) input required to power the microprocessor of the register's electronics. This power must always remain on and must be on a separate breaker from control lines (control/pump motor feed). The Micro breaker rating must not be more than 15 A. It is recommended that this be on a separate breaker from brand panel lights to reduce electrical noise and allow separate control of lights. In a site configuration using multiple dispensing units, the power for microprocessors of up to eight units can be supplied by one breaker, except units that combine the AUTH control line and micro feed. If the dispensing units are combining AUTH and micro feed (and possibly the light feed), the power for four units can be supplied by one breaker. This line also supplies power to the optional TopKAT PLUS or Atlas PRIME. If this unit is equipped with a TopKAT PLUS or Atlas PRIME option, for wiring requirements and information, refer to *MDE-5013 TopKAT PLUS Installation Manual* or *MDE-5411 ForeHB Islander PRIME Installation Manual*.

The cold weather DEF unit's internal heater cannot share the micro feed AC line and neutral circuit.

Micro Neutral

The micro neutral is a return line for AC from the microprocessor of the dispensing unit to the breaker panel. This line also serves as the return for the optional TopKAT PLUS or Atlas PRIME.

Auth/Pump Motor Feed (Self-contained Pumping Units)

The auth/pump motor feed is a 115 VAC (230 VAC international) input that is required to power and authorize the auth control line. This line is used to provide authorization for the self-contained pumping unit (when enabled, refer to *MDE-4334 Atlas Start-up/Service Manual*). If this line is controlled by an FMS using solid state relays, a resistor assembly must be installed between the auth feed line and feed neutral to prevent false triggering of the authorization input. The resistor assembly is 8.2 K Ohm, 10 W (part number C05818) for 115/230 VAC domestic; and 30 K Ohm, 10 W (part number C06683) for 230 VAC international wiring. Two auth/pump motor feed lines are provided for twins.
Note: The auth/pump motor feed is not required for the TopKAT PLUS system.

The auth/pump motor feed line is used to power slow flow and fast flow valves (when installed). The power used to control the pump motor is also provided by this line, as well as the power used to control an external valve used on AST installations. It is possible to combine control lines for twins and supply them from one breaker. However, the gauge of the wire must be adjusted to handle the load of two motors. The reset complete signal used for external monitoring of the pump also originates from the auth/pump motor feed line.

External Valve

The external valve line is used to directly power an anti-siphon valve mounted on top of an AST. The valve must operate at the same voltage as the pump motor and the current draw must not exceed 1 A, or the valve must be switched through an external relay controlled by the external valve line. Do not connect two or more external valve lines together. If more than one pump is drawing from the tank, separate anti-siphon valves must be installed, or each external valve line must operate an external relay, which then operates the valve.

Neutral Feed

The neutral feed is the AC current return line back to the breaker panel for all attached devices (pump motor, reset motor, and solenoid valves).

Auth Input Dispensers

The auth input is a 115 VAC (230 VAC international) input that is required to power and authorize the auth control line. This line is used to provide authorization for the dispensing unit (when enabled, refer to *MDE-4334 Atlas Start-up/Service Manual*). If this line is controlled by an FMS using solid state relays, a resistor assembly must be installed between the auth feed line and feed neutral to prevent false triggering of the authorization input. The resistor assembly is 8.2 K Ohm, 10 W (part number C05818) for 115/230 VAC domestic and 30 K Ohm, 10 W (part number C06683) for 230 VAC international wiring. This line also supplies power, which is switched to slow flow and fast flow valves along with the switch detect signal. Two lines are provided for twins. It is possible to combine the AUTH control line and micro power feed and supply them from one breaker (15 A max.).

If the Atlas commercial electronic unit is to be controlled through the authorization of this line, special care must be taken in the wiring of submersible control lines when a common submersible is used for more than 1-hose outlet. For more information, refer to “Submersible Starter Drive (Subm Starter Drive)” and “Submersible Pump Drive (Subm Pump Drive)” on page 4-4.

Units with Standard Submersible Starter Drive (Subm Starter Drive)

Power for the submersible start drive line originates from the AUTH input. The submersible starter relay line in standard remote dispensers is not capable of directly powering a submersible pump. A starter relay must be used. Control lines for twin remote dispensers can be combined together and powered by one breaker if individual control of each side is not required. In site configuration using multiple remote dispensers, power for control lines of up to 8-hose outlets (eight singles or eight twins) can be supplied from one breaker.

Units with Submersible Pump Drive Relay Option

Units equipped with optional relays for direct submersible pump drive can be connected directly to submersible pumps up to 3/4 HP at 115 VAC, or 1-1/2 HP at 230 VAC. Power for the submersible pump drive line originates from the motor feed input. The power supplied to the motor 1 or 2 feed input must be supplied from a separate breaker dedicated to the STP. The gauge of this wire must be determined according to the size of the motor, the voltage at which the motor will be powered, and the distance from the breaker panel to the pump.

Submersible Starter Drive (Subm Starter Drive)

The submersible starter drive is a 115 VAC (230 VAC International) output used to control a submersible starter relay. Two lines are provided for twins. This line is capable of supplying 300 mA of AC current to control the coil of the submersible motor contactor (starter relay). This is sufficient for directly connecting to popular models, but if in doubt, check the contactor (relay) manufacturer's data sheet for the sealed VA rating. Divide the sealed VA by the coil voltage to determine the current. This line must not be connected directly to the submersible pump, shorted to any conduit or chassis metal, or incorrectly wired; otherwise, the Central Processing Unit (CPU) Printed Circuit Board (PCB) will be instantly damaged. This line must be left capped when not in use. To avoid accidental damage, follow checks before applying power.

Note: When multiple dispensers are used to control a common submersible starter relay or pump, and the Atlas commercial electronic unit is controlled (authorized) through the auth/pump motor feed line (as in the case of some FMSs), it is important that lines from the Atlas commercial electronic unit to the submersible equipment be isolated from each other. This can be accomplished by running submersible control lines through a secondary set of relay contacts in the FMS. If a secondary set of contacts is not available, external control relays must be used between the Atlas commercial electronic unit and the submersible starter relay or pump. Another option is to provide a separate submersible starter relay for each hose outlet. In no case must the submersible drive lines from the Atlas commercial electronic unit be tied together.

Submersible Pump Drive (Subm Pump Drive)

The submersible pump drive is not available on all Atlas models for remote dispensers, and is active only when submersible drive relays are supplied (see section "Units with Submersible Pump Drive Relay Option"). The submersible drive is a 115/230 VAC (230 VAC international) output used to control the submersible starter relay or submersible pump. When connected directly to the submersible pump, the motor size cannot exceed 3/4 HP at 115 VAC, or 1-1/2 HP at 230 VAC. Two lines are provided for twins. In cases where both lines control the same starter relay or pump, they can be combined.

Note: For situations where more than one hose outlet uses the same submersible pump, refer to the note in "Submersible Starter Drive (Subm Starter Drive)".

Reset Complete (Switch Detect)/Slow Flow

The reset complete/slow flow is a 115 VAC (230 VAC international) output used to indicate that the reset process is complete and the unit is ready to dispense the product. It may be required when used with an FMS. It may also be used to control a remote (satellite) slow flow valve. Two lines are provided for twins.

In addition to the internal load of the slow flow valve, this line is capable of supplying a maximum of 170 mA AC to the satellite valve and FMS. When you are connecting it to a non-Gasboy satellite or FMS, ensure that this limit is not exceeded. This line must not be shorted to any conduit or chassis metal, incorrectly wired, used to control both stages of a satellite valve, or be connected to equipment requiring more than 170 mA AC from this line to operate; otherwise, the CPU PCB will be instantly damaged. This line must be left capped when not in use. To avoid accidental damage, follow checks before applying power.

Fast Flow Valve

The fast flow valve is a 115 VAC (230 VAC International) line that can be used to control a remote (satellite) fast flow valve. Two lines are provided for twins. In addition to the internal load of the fast flow valve, this line is capable of supplying 170 mA AC to the satellite valve. When connected to a non-Gasboy satellite, ensure that this limit is not exceeded. This line must not be shorted to any conduit or chassis metal, incorrectly wired, used to control both stages of a satellite valve, or be connected to equipment requiring more than 170 mA from this line to operate; otherwise, the CPU PCB will be instantly damaged. This line must be left capped when not in use. To avoid accidental damage, follow checks before applying power.

Phase 2 Feed

The phase 2 feed is a hot feed, which is the opposite phase of pump motor feed. This line and pump motor feed are used for 230 VAC domestic motor applications. If connected to equipment requiring control of the authorization input, phase 2 feed must be switched through a separate relay to prevent false triggering of the authorization signal.

Slow/Fast Satellite Return

The slow/fast satellite return lines are used only in units that come equipped with satellite piping. They are used in applications where the remote dispenser and satellite may not dispense the product at the same time. These lines are not connected internally as they leave the factory. Four lines are provided for twins. These lines must not be shorted to any conduit or chassis metal, or be connected to equipment requiring more than 170 mA from each line to operate; otherwise, the CPU PCB will be damaged instantly. These lines must be left capped when not in use. To avoid accidental damage, follow checks before applying power.

Light Feed

The light feed is a 115 VAC input required to power brand panel lights. In a site configuration using multiple remote dispensers (or pumps), the power for lights of up to eight units can be supplied by one breaker (except on dispensers that combine the AUTH control line and micro feed). It is recommended that this be on a separate breaker from the micro feed to reduce electrical noise and allow separate control of lights. If separate control of the lights is not required, it is possible to combine the light and micro feed and supply them from one breaker (15 A max.).

Light Neutral

The light neutral is a return line for AC current from lights to the breaker panel. When a separate breaker is not used to control lights, the light neutral is attached to the micro neutral.

Heater Feed (Cold Weather DEF Units)

The heater feed is a 115 VAC input required to power the internal heater in a cold weather DEF dispenser. These units require the use of one separate 15 A circuit breaker per dispenser for the internal heater and must not share breakers with other dispenser. This power must always remain on and must be on a separate breaker from the micro feed, control lines (AUTH input), and brand panel lights.

Heater Neutral (Cold Weather DEF Units)

The heater neutral is a return line for the AC current from the internal heater in a cold weather DEF dispenser to the breaker panel. This line cannot be shared with other dispenser. This line must be separate from the micro feed, control lines (AUTH input), and lights neutral.

Pulser

When the dispensing unit includes the optional pulser interface, a pulser output is provided. This pulser output provides a DC output that indicates the quantity of product dispensed. The pulse rate can be configured by a sealable Dual In-line Package (DIP) switch for rates of 1, 10, 100, 250, or 500 pulses per gallon, or 1, 10, 100, or 250 pulses per liter. For the Atlas commercial electronic pump, pulse rates are 1, 10, 100, 250, or 500 pulses per gallon, or 1, 10, or 100 pulses per liter.

The output is an open collector transistor capable of sinking up to 100 mA DC at voltages up to 24 VDC. The DC ground for the circuit comes from the FMS. Since the transistor switches between ground and high impedance, the installer must provide a voltage reference when the transistor is in the high impedance state. This reference voltage is provided by a pull-up resistor installed at the FMS between the pulser input and reference voltage. The value of this resistor is calculated based on the voltage and current requirements of the FMS pulser circuit.

Figure 4-1: Pulsers

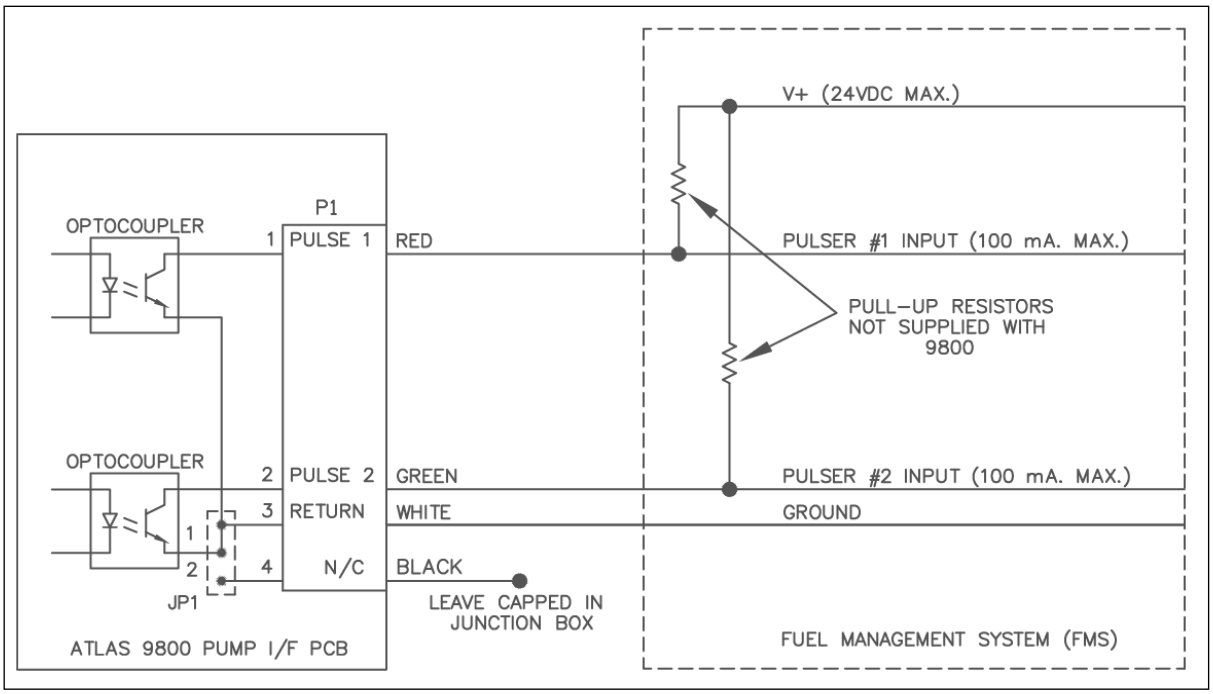

In the main Junction Box (J-box), the optional pulser interface is supplied with eight wires. On Ultra-Hi units, a separate DC J-box with six wires is supplied. The unused wires in the J-box must be individually capped.

RS-485

When the dispensing unit includes the optional RS-485 interface, RS-485 lines are provided. This interface allows you to connect a Gasboy CFN PLUS system, Islander PLUS, TopKAT PLUS (non-dispenser mounted), Islander PRIME directly to the Atlas commercial electronic series dispensing unit. These lines must be capped individually when not in use. The RS-485 interface is included with the TopKAT PLUS or Atlas PRIME option.

Local Area Network (LAN)/Wide Area Network (WAN)

When the dispensing unit includes the optional TopKAT PLUS or Atlas PRIME, lines for communication to the TopKAT PLUS or Atlas PRIME are provided. These lines allow you to communicate directly to the TopKAT PLUS or Atlas PRIME through a LAN/WAN connection. For more information on LAN/WAN wiring, refer to *"Field Wiring Requirements (LAN/WAN)" on page 7-8*.

5 – Control Lines for Atlas Mechanical Series

Purpose

This section is provided to familiarize the installer with control inputs and outputs that are available for the Atlas mechanical series dispensing unit. It is recommended that installers read these descriptions to obtain a better working knowledge of the unit to guide them in planning the site wiring. For specific wiring diagrams and installation notes, refer to "Installation" on page 6-1.

The Atlas mechanical series may be provided for use with 230 VAC power for international applications. The operating voltage for control lines to these units is shown in parentheses as (230 VAC international).

If you are connecting the Atlas mechanical unit to a Gasboy FMS, refer to the following documents:

Document Number	Title	GOLD Library
MDE-4811	Islander PLUS and ICR PLUS Installation Manual	Gasboy Fleet PLUS System
MDE-4813	CFN Plus Installation Manual	Gasboy Fleet PLUS System
MDE-5013	TopKAT PLUS installation Manual	Gasboy Series 1000/Fleetkey and TopKAT
MDE-5411	ForeHB Islander PRIME Installation Manual	Gasboy Fleet PRIME

Grounding

To ensure proper operation of the equipment and required safety factors, a good ground line must be provided. A ground wire (preferably green) must be connected between the unit's AC J-box ground lug and main electrical service panel. One earth ground connection is required per unit. The ground rod must be a solid, corrosion-resistant conductor that must be installed at the main electrical panel as per the NEC. It must be properly tied into the ground bus strip of the panel. It is recommended that the neutral and ground bus strips be bonded together (unless prohibited by local codes).

GFI breakers are required for DEF only units installed on and with a skid tank platform because of no underground piping, AC power in potentially wet area, and a potential for earth ground to become broken if skid tank moves.

A GFI works by having a sensor that detects changes in current to the load, by comparing the current owing to and from the load. A dropoff in the current equivalent to about 5 mA, turns off all power by tripping a relay within the GFI within a few hundredths of a second.

When powering a dispenser with a GFI, any device that the dispenser supplies power must have its return to the same neutral as the dispenser (for example, the STP control relay).

Reset Motor Feed

The reset motor feed is a 115 VAC (230 VAC international) input supplied through the pump handle switch to activate the reset motor. Without power being supplied to this line, the unit will not reset when the pump handle is turned on. Two feed lines are provided for twins. This feed is also connected to the input of one of the internal switches of the electric reset. When the reset finishes its cycle, the 115 VAC (230 VAC international) input to the switch will be passed through as an output, causing the solenoid valve (optional in some models) to open and the reset complete line to indicate 115 VAC (230 VAC international).

Pump Motor Feed

The pump motor feed is a 115 VAC (230 VAC international) input supplied to the input side of one of the internal switches of the electric reset. When the reset finishes its cycle, the 115 VAC (230 VAC international) input to the switch is passed through as an output, causing the pump motor to receive power and begin operation. Without power to this line, the unit will reset and will be unable to fuel. Two feed lines are provided in twins that contain two motors. The gauge of this wire (and its neutral wire) must be determined according to the size of the motor, the voltage at which the motor will be powered (115 VAC or 230 VAC), and the distance from the breaker panel to the pump. It is possible to combine pump motor feeds for twins and supply them from one breaker. However, the gauge of the wire must be adjusted to handle the load of two motors.

Return (Neutral)

The return is the AC current return line back to the breaker panel for all attached devices (pump motor, reset motor, and solenoid valves). The gauge of this wire must be equal to that of the pump motor feed (suction pumps) or submersible feed (remote dispensers). This wire is commonly referred to as the neutral wire.

Submersible Feed, Submersible Drive

The submersible feed is a 115 VAC (230 VAC international) input supplied to the input side of one of the internal switches of the electric reset. When the reset finishes its cycle, the 115 VAC (230 VAC international) input to the switch is passed through as an output (submersible drive) to drive a starter relay or to directly drive a submersible motor up to one HP at 115 VAC/230 VAC. Any submersible motor exceeding this limitation must use a starter relay.

Reset Complete (Switch Detect)/Slow Flow

The reset complete is a 115 VAC (230 VAC international) output used to indicate that the reset is complete and the dispensing unit is ready to dispense the product. Two lines are provided for twins. Use this line only when monitoring a dispensing unit that is connected to a FMS. This line must be capped when not in use, and is connected to the slow-flow stage of the solenoid in the pump.

Fast Flow

The fast flow is a 115 VAC (230 VAC international) input that controls the fast flow valve of the pump/remote dispenser (when a slow/fast flow valve is available). If slow/fast-flow control is not required, this line must be tied to reset the complete/slow-flow line. The line must be switched through the FMS and be turned on only when the pump/remote dispenser is authorized and in the fast-flow mode. This line will be switched on when the pump/remote dispenser is in the manual mode.

Light Feed

The light feed is a 115 VAC (230 VAC international) input required to power brand panel lights. In a site configuration using multiple remote dispensers (or pumps), power for lights for up to eight units can be supplied by one breaker. If separate control of lights is not required, the light feed for each dispensing unit may be taken from its reset motor feed, provided the unit is not connected to a FMS.

Light Neutral

The light neutral is a return line for AC from lights to the breaker panel. When a separate breaker is not used to control lights, the light neutral is attached to the neutral, which is connected to the reset motor.

Phase 2 Feed

The phase 2 feed is a hot feed, which is the opposite phase of pump motor feed. This line and pump motor feed are used for domestic 230 VAC motor applications.

Pulser

The pulser supplies a DC output that indicates the quantity of product dispensed. Pulsers are optional and are used only when monitoring the dispensing unit that is connected to a FMS. The pulser wiring must run in a separate conduit away from AC power control lines.

This page is intentionally left blank.

6 – Installation

Purpose

This section provides information specific to the installation of Atlas pumps/dispensers.

Required Equipment and Materials

DEF is not flammable or explosive. Therefore, installation requirements for DEF units differ from units that handle hazardous fuels. However, electrical safety requirements are applicable. When installing a DEF unit in a hazard zone defined by the location of another pump/dispenser handling hazardous fuels, the area of the DEF dispenser within the hazard zone must conform to requirements for units handling hazardous fuels.

The following items are required for the installation of the equipment:

- Anchor bolts
- UL-approved sealant (for use with fuels being encountered)
- Pit box cover plates (for use when it is required to adapt the unit to pre-existing pit boxes)
- Lifting device (forklift) to move and lift pumps/dispensers
- Breakaways, hoses, nozzles, and swivels
- Approved wire nuts
- Barricades
- Potting compound and fiber dam material (to allow potting of conduit as per class I, division II locations, as specified in the NEC)

Important Requirements for E85 Units

The following equipment and materials are required to properly install E85 units:

UL-listed E85 Hose (Q13486)

- Veyance℠ Flexsteel™ Futura® Ethan-All for E85
- Veyance Flexsteel Futura for E25

Note: Extended reach hoses are not available for the E85 applications.

UL-listed E85 Nozzle (M11298)

OPW® 21GE

Note: Approved for use with the E85 dispensers, as required under UL 87A.

UL-listed E85 Swivel (N23748-04)

OPW 241 TPS-0492

Note: Approved for use with E85 dispensers, as required under UL 87A.

UL-listed E85 Shear Valve (T19695-23)
OPW 10P-0152E85
Note: Approved for use with E85 dispensers, as required under UL 87A.

UL-listed E85 Breakaway (N23010-10)
OPW 66V-0492
Note: Approved for use with E85 dispensers, as required under UL 87A.

Filter
Use only filters specifically marked for use with E85.

UL-listed Pipe Sealant
Use only UL-listed TPS PTFE pipe sealant manufactured by SAF-T-LOC International Corp.

UL-listed Teflon® Tape
Use only UL-listed Taega Technologies Inc. Teflon tape.
*Note: Teflon tape must be used **only** at the inlet pipe connection.*

IMPORTANT INFORMATION

For E85 front load units, side B is the side with the J-box. For more information on nozzle boot positioning for the different models, refer to "Foundation Diagrams" on page A-3.

Important Considerations when Changing Fuel Types

⚠ WARNING

Certain special alternative fuels, such as E85 and additives, can degrade pump/dispenser performance or integrity if the dispensers are not designed for use with such fuels. Additionally, converting to certain standard fuels (gasoline, diesel, kerosene, and so on) from alternative fuels, such as those with ethanol (E85), methanol, or biodiesel, or from alternative fuels to standard fuels can degrade dispenser performance or integrity. Similar effects can also occur when converting units to different standard fuel types.
As per UL 87A requirements, nozzles dispensing E85 fuel must not be used to dispense any other type of fuel such as Gasoline.

Leaks and potential environmental hazards can result or components may fail prematurely.

To avoid these issues, follow the guidelines in this section.

Follow the guidelines given below when changing fuel types for a pump/dispenser or using alternative fuels or fluids:

- Verify with your Gasboy ASC or distributor if the fuel you will be using is compatible with the pumps/dispensers dispensing the fuel.
- For flexible fuel dispensers, do not use standard hydraulic parts used in other Gasboy pumps/dispensers for service parts in these units. Standard dispenser parts may not be compatible with fluids.

- Biodiesel fuels must conform to American Society for Testing and Materials (ASTM) standards for biodiesel fuels. Mixes of diesel with cooking oils, other plant or animal derived oils, and so on, are not considered biodiesel. Use of such mixes may void warranty on the hydraulic components of the unit.
- Review the latest copy of the unit's warranty statement regarding the use of fuel.
- Certain fuels (especially fuels enhanced with alcohol) when first used in tanks previously containing a different fuel may clean out the tanks and force a large amount of contaminant into the dispenser. Other than abnormally clogging filters, this large quantity of contaminant may damage certain dispenser components. Do not run units without filters at such times. It is normally required that tanks and lines be cleaned of all water, sediment, and contaminant before such conversions to minimize potential pump/dispenser downtime or damage. Damage to hydraulic components from contamination when not using filters is not covered by warranty. For recommendations, consult your ASC or Gasboy distributor.
- Do not use any equipment that was formerly used to store or dispense any other fuel or liquid with DEF. Dispensers designed for use with DEF must only be used with DEF.
- Do not use prover cans meant for engine fuel with DEF or vice versa.
- Although conversions from one fuel to an equivalent fuel (say from another supplier) generally do not create issues, it is recommended that after making any fuel type conversions (including those to alternative fuels such as E85 or back), all units be visually inspected for leaks, two days, one week, and one month after fuel conversion. Have your ASC repair any leaks found. This must also be performed for standard fuels when significant new additives are incorporated.

IMPORTANT INFORMATION
The above guideline does not apply to flexible fuel model dispensers.

- Whenever non-equivalent fuel conversions are performed, it is recommended that all units be checked for calibration within one month of fuel conversion.
- Some non-equivalent fuel conversions will necessitate the requirement to change the pump/dispenser filter type previously used. For any changes required, consult your ASC or Gasboy distributor.
- In flexible fuel dispensers, Gasboy recommends the use of 10 micron filters for gasoline-based flexible fuels. Although the use of finer filtration is allowable, filters will tend to clog prematurely, causing excessive filter maintenance cost.
- Use only meters and registration devices for DEF that have a National Type Evaluation Program (NTEP) Certificate of Compliance issued by the National Conference on Weights and Measures (NCWM).
- Non-metallic piping and components used in aboveground DEF service must have high melting points and adequate strength and durability. Some plastic compounds that are suitable for DEF may not be compatible with petroleum products. They must be avoided at locations where they can come in contact with petroleum from a routine operation or a spill.
- An anti-siphon valve must be installed on AST where the DEF level can be at a higher elevation than the supply piping or the dispenser. The valve will prevent a potential leak in the piping from creating a siphon that can cause a product release.

Read NFPA 30A and NFPA 70

DEF is not flammable or explosive. Therefore, installation requirements for DEF units differ from units that handle hazardous fuels. However, electrical safety requirements are applicable. When installing a DEF unit in a hazard zone defined by the location of another pump/dispenser handling hazardous fuels, the area of the DEF dispenser within the hazard zone must conform to requirements for units handling hazardous fuels.

⚠ WARNING

You are working in a dangerous environment of gasoline, gasoline vapor, and electricity. Failure to install this equipment in accordance with NFPA 30A and NFPA 70 can result in severe injury or death. Read, understand, and follow NFPA 30A and NFPA 70.

Before installing the equipment, read, understand, and follow:

- The NEC (NFPA 70)
- The Automotive and Marine Service Code (NFPA 30A)
- Any national, state, and local codes that may apply

⚠ CAUTION

Failure to install the equipment as per the NFPA 30A and NFPA 70 may adversely affect the safe **use** and **operation** of the system.

Accurate, sound installations reduce service calls. Use experienced, licensed contractors that practice accurate, safe installation techniques. Careful installation can eliminate potential problems.

The equipment manufacturer must provide instructions for other equipment such as STPs, shear valves, and underground tanks. Complete installation instructions for other manufacturer's equipment are not provided.

Preparing for Installation

To prepare for the installation, proceed as follows:

1. Read all instructions before beginning the installation.
2. Follow all safety precautions:

- Barricade the area.
- Do not allow vehicles or unauthorized people in the work area.
- Do not smoke or allow open flames in the work area.
- Do not use power tools in the work area.
- Wear eye protection during the installation.
- Use circuit breakers to turn off all power to pumps/dispensers and STPs. Multiple disconnects may be required.

3 Check the following for proper installation, as per the criteria specified in *MDE-4333 Atlas Fuel Systems Site Preparation Manual*, and other manufacturer's recommendations that apply:

- Emergency Power Cut-off Switch
- Circuit Breakers
- STP Control Relay Boxes - Dispensers only (see Notes)
- Isolation Relays - Dispensers only (see Notes)
- Breakaways, hoses, nozzles, and swivels (refer to "Installing Breakaways, Hoses, Swivels, and Nozzles" on page 6-18)
- Conduit and Wiring (see Notes)
- Grounding
- Shear Valves - Dispensers only (see Notes)
- Piping and Fittings
- Fuel Storage Tanks
- Pressure Regulating Valves (aboveground tanks only)
- STP - Dispensers only
- Tank and/or Line Leak Detectors
- Pit Boxes

Notes: 1) A shear valve is an NFPA 30A recommended safety device required for every product line at each dispenser. For installation instructions, refer to MDE-4333 Atlas Fuel Systems Site Preparation Manual. Shear valves may also be required for aboveground tank installations and other situations with pumps. Consult local and state requirements.

2) Refer to MDE-4334 Commercial and Retail Series Atlas Start-up/Service Manual.

3) Some locations require shear valves for vapor lines. Consult local and state regulations.

4) The 9862 Atlas DEF units uses a special stainless steel shear valve made by OPW.

4 Inspect the pump/dispenser cartons and contents for shipping damage. Gasboy does not cover shipping damage under its warranty policy. Notify the shipper of any damage.

5 Remove the bezel and lower panels (doors) of the pump/dispenser, refer to *MDE-4334 Commercial and Retail Series Atlas Start-up/Service Manual*.

6 Ensure that the fuel grade for product lines matches the pump/dispenser brand panels and foundation layout. Product lines from the island pit box must have labels.

Before Placing Unit on Fuel Island

⚠ WARNING

High alcohol percentage fuels such as E85 or fluids such as DEF may be incompatible with certain plumbing materials and hydraulic components.

Use of incompatible materials or components with E85 or DEF can result in leaks. For E85, unexpected failures of components may also occur resulting in fire or explosion or environmental damage. When installing components in E85 units, refer to "Important Requirements for E85 Units" on page 6-1.

When dispensing alternative fuels such as E85 or fluids such as DEF, verify with the manufacturer if the material of all plumbing components are compatible with the fuel (E85) or fluid being dispensed.

Note: Before mounting the unit on to the fuel island, read and understand this section completely. This information is essential to avoid installation errors.

Verifying and Determining Plumbing Requirements

Before placing the unit on an island, determine the correct location of piping and orientation of the unit involved. A common installation error is to install the unit backwards, which results in expensive modification for reinstallation later. This section contains information regarding plumbing requirements for various models.

IMPORTANT INFORMATION

Do not make assumptions about configurations based on previous experience, hose positions, or layout of the unit being replaced, whether replacing a Gasboy unit or that of any other manufacturer.

Determining the Unit Orientation

To ensure proper unit orientation, perform the following:

- Mount the unit using the mounting bolt locations specified. Seal the base as required.
- Fill in any openings to the potentially larger pit box opening. Seal as required.
- DEF cold weather units are front load units. Ensure that the hose can be used at only 180 degrees from the front of the unit. That is, the hose is not used at a position directly behind the unit. Reorientation of the unit may be required to avoid operation in this manner.

Determining the Unit Side and Type

Before lifting units on to the island, ensure the following:

- To determine the unit type, refer to the unit's model sticker.
  Note: The model sticker is located at particular places and can be viewed by removing the bezel. In mechanical units, it is on the inside, left side of the top housing. In electronic computer units, it is on the electronics base plate in the front of the top housing.
- To locate the appropriate configuration for your unit, refer to "Foundation Diagrams" on page A-3.
- DEF cold weather units are front load only units. DEF warm weather units can be side load or front load units.

Adapting Pit Box

For installation using an existing pit box, some modifications may be required. The following list highlights the changes that may be required. These installation considerations may also apply when replacing competitive units.

To adapt plumbing/conduit to stub-up locations, ensure the following:

- Use flexible piping in the pit box for plumbing adaptation.
- When adapting a unit to an existing pit box or one that is not specifically designed for the unit, the rain lip may require modification or removal. If the rain lip is removed, then the entire base of the dispenser must be sealed to the island. Study foundation layouts and the existing pit box to determine if modifications are required, before mounting the unit on the island.
- When adapting for an Atlas model 9850KXTW1, refer to "Model 9850KXTW1 Shear Valve Configuration" on page 6-10.
- For working in this area, refer to the following warning:

⚠ WARNING

Applicable for fluids other than DEF. You are working in a potentially hazardous environment where fuels and their vapors may be present and can be ignited with sparks from grinding and cutting tools. Ensure that sparks or open flames are not generated when you modify a rain lip where fuel or fuel vapors may be present.

Lifting Units

⚠ WARNING

Lifting heavy equipment can be hazardous. Equipment can fall, and cause severe injury or death. Use lifting equipment of proper capacity and factor of safety when moving or positioning the unit. Stand clear from the pump/dispenser when lifting, lowering, or transporting.

Before mounting the unit to the island, ensure that the pit box and unit base are compatible. Some pit box plates have rain lips that require modification before placing the unit on plate.

Lifting Units with Forklift

To lift units with a forklift, proceed as follows:

1. Ensure that the weight of the pump/dispenser is equally distributed on the tines to the forklift.
2. Lift and guide the unit, positioning it on to the island.

Connecting Pump/Dispenser Inlet Pipes

To aid in the alignment and positioning of piping, it is always recommended that the unit is not anchored securely to the island until the piping is completely aligned and tightened.

⚠ WARNING

Use of incompatible materials or components with E85 or DEF can result in leaks. For E85, unexpected failures of components may also occur resulting in fire or explosion or environmental damage. When installing components in E85 units, refer to "Important Requirements for E85 Units" on page 6-1.

When dispensing alternative fuels such as E85 or fluids such as DEF, verify with the manufacturer if the material of all plumbing components are compatible with the fuel (E85) or fluid being dispensed.

Do not replace the dispenser or pump parts with those incompatible with the fuel involved.

⚠ WARNING

Shear valves must be installed correctly. Improperly or insufficiently anchored shear valves can lead to fire or explosion. Fire/explosion can result in severe injury or death. For DEF units product spills may occur. Anchor all shear valves as per the manufacturer's instructions. AST installations require a pressure regulating valve at the base of the pump.

Shear valves are not required in pumps, except in special circumstances. The following procedure for a pump is identical to that of a dispenser, except that a shear valve may not be used. The contractor must provide and install pipe unions, irrespective of whether shear valves are used or not.

⚠ CAUTION

Applicable to Dispensers Rated for E85 Use:

Do not use tape at the very end of the pipe nipple to avoid tape entering the dispenser hydraulics. Tape in the hydraulics can cause failures of valves, nozzles, or other significant problems.

Use only UL-listed TPS PTFE pipe sealant manufactured by SAF-T-LOC International Corp.

Use only UL-listed Taega Technologies Inc. Teflon tape.
*Note: Teflon tape must be used **only** at the inlet pipe connection.*

For units with shear valves, the contractor-provided union must be installed on the shear valve. For proper tightening of the union to the shear valve, refer to the "shear valve manufacturer's instructions". For units without shear valves, the contractor-provided union must be installed on the ground stub pipe.

For model 9850KXTW1, refer to "Model 9850KXTW1 Shear Valve Configuration" on page 6-10.

For more information, refer to "Shear Valves" on page 7-11.

⚠ CAUTION

Shear valves or other dispenser components can be damaged or broken if improper wrench techniques are used. The installer must use two wrenches, so that stress is not applied to the shear portion of the valve during tightening.

To connect pump/dispenser inlet pipes, proceed as follows:

1 To maximize the installation versatility, units are shipped without the inlet piping. The installer provides and installs the plumbing in the lower hydraulics cabinet. Where required, use the UL-approved sealant suitable for the applicable fuel type.

Note: For hazardous fuel applications, flexible or non-metallic pipes or hoses must not be used within the hydraulics cabinet or the shear valve may not operate correctly during an accident. Flexible or non-metallic pipes or hoses must not be connected directly to the Shear Valve for DEF applications.

2 Ensure that you remove any shipping plugs or caps that may be present in pipes, shear valves, and unions. Leaving the mounting bolts a little loose at this point will require adjustment when you install the piping.

Notes: 1) The contractor-supplied pipe and fittings must be a 1-1/2-inch NPT Schedule 40 black iron. Flexible or non-metallic pipes or hoses must not be used within the dispenser.

2) For Super-Hi and Ultra-Hi units, the contractor-supplied pipe and fittings must be a 2-inch NPT schedule 40 black iron. Flexible or non-metallic pipes or hoses must not be used within the dispenser.

3 Loosely connect the union halves together (see Figure 6-1 on page 6-10).

⚠ CAUTION

Do not use a pry (crow) bar to position the pump/dispenser over the conduit or pipes. This can damage valves, conduit, or other parts of the unit. Do not stress the unit's hydraulics, mounting frame, mechanical computer, and so on, by attempting to connect parts that are vertically too short.

4 Double-check the alignment of pipes, conduit, and frame (see Figure 6-1).
Note: Misaligned piping can result in a leak.

Figure 6-1: Shear Valve at Grade

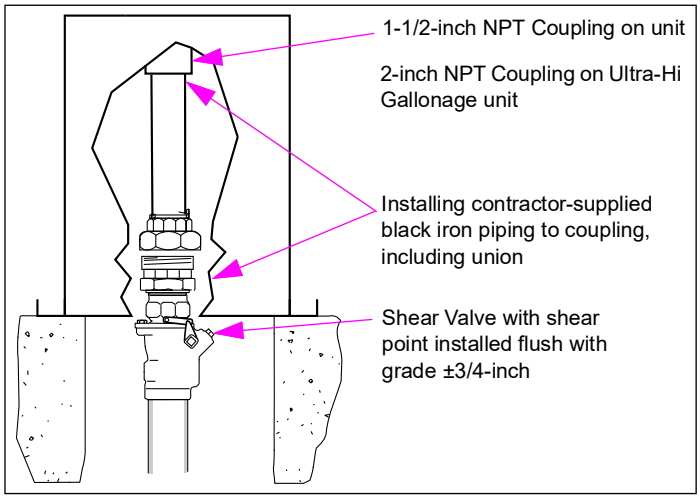

Note: It is a mandatory code requirement that the shear section of the shear valve be within +/- 3/4 inch (or to the shear valve manufacturer's requirement, whichever is tighter) from the plane of the bottom of the base of a dispenser.

5 Connect and tighten the union halves (see Figure 6-1).

6 Tighten the anchor bolts. Ensure that the shear valves are properly tightened to the pit box or the shear valve anchor bracket.

Model 9850KXTW1 Shear Valve Configuration

The Atlas Ultra-Hi with twin inlet manifold requires a special inlet configuration because of the limited base to manifold distance. Gasboy recommends the Marrison Bros. 2-inch 636F shear valve with a union attached at the bottom of the valve, to connect to the service system piping.
Note: This configuration is for the Atlas Model 9850KXTW1 only. All other Atlas models must use a standard inlet configuration.

All shear valve anchoring requirements noted in this section apply.

Figure 6-2: Atlas 9850KXTW1 Model Recommended Inlet Configuration

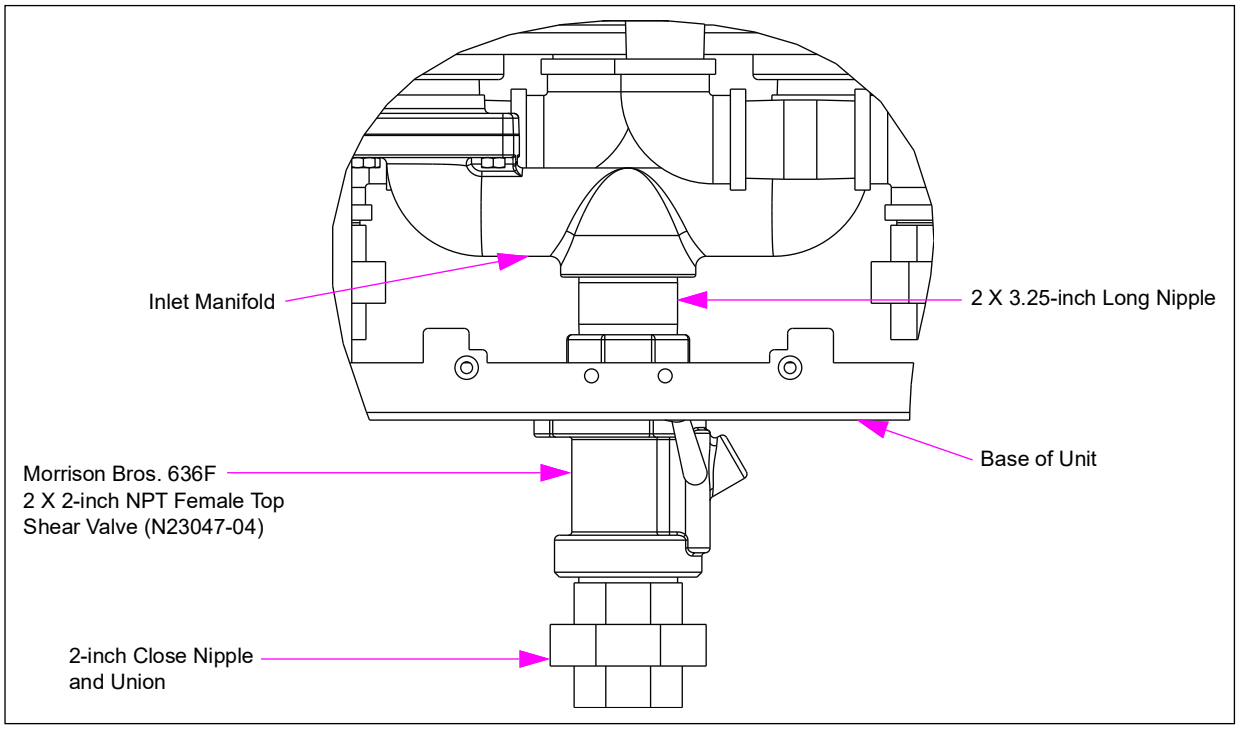

OPW Shear Valve for 9862KXTW1 DEF Unit

Note: For more information on configuring the shear valve, refer to the manufacturer's recommendations.

Figure 6-3: OPW Shear Valve

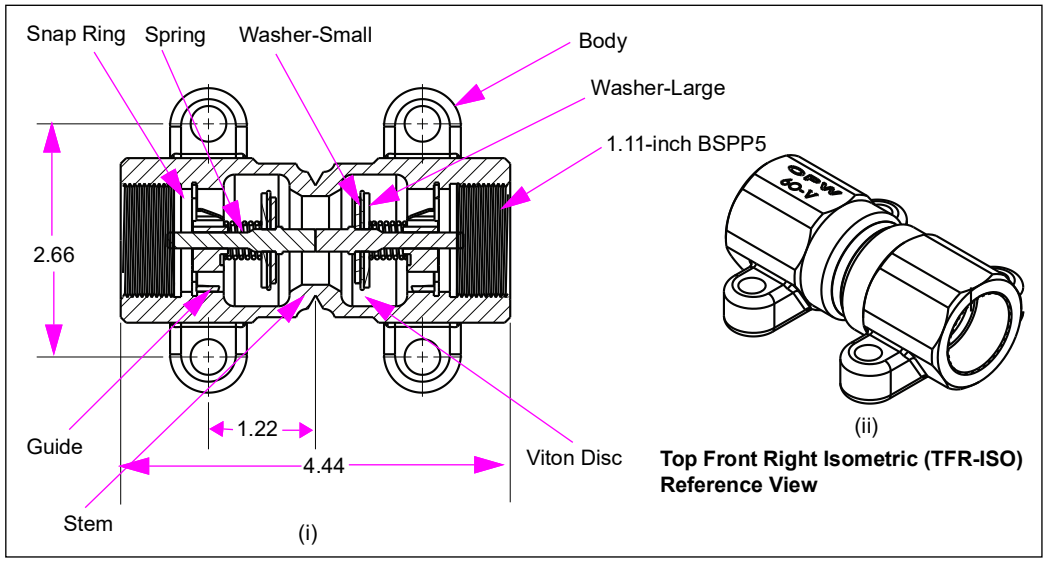

Anchoring Pump/Dispenser to Island

⚠ WARNING

Improper anchoring of units can cause damage, severe injury, or death resulting from the unit tipping over from the impact or drive-off. Also, the hose breakaways may not function properly if the unit is not anchored. NFPA 30A requires you to anchor pumps/dispensers. Securely install anchor bolts at all anchoring locations as shown on "Foundation Diagrams" on page A-3, for safe operation of shear valves and hose breakaways. Also refer to "shear valve manufacturer's instructions".

Note: Ground tank installations require a pressure regulating valve at the base of the pump. Gasboy provides the 52 valve for this purpose.

To anchor a pump/dispenser to the island, proceed as follows:

1 Ensure that the shear valves are firmly anchored to the island form [concrete or pit box (see Figure 6-4)].
Note: If the shear valve is not anchored properly, it may not operate correctly during a severe impact. Refer to "shear valve manufacturer's instructions".

Figure 6-4: Anchoring Shear Valve Using Anchor Brackets

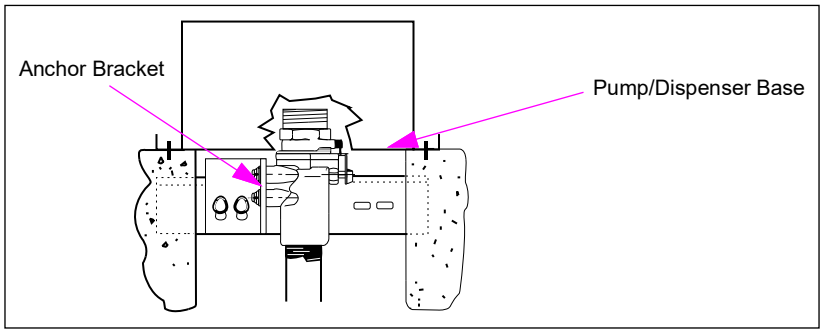

2 Loosely anchor the pump/dispenser to the island as per the foundation layout locations using all the required anchoring points, according to the following:
- Use 1/2-inch anchor studs with large heavy duty washers (slot designed for that size).
- Use bolts or studs that are of grade 5 steel.
- Use hardware that is corrosion-protected or resistant.
  Note: Do not use plastic or low strength bolts, or pallet bolts.
- Studs/bolts must be anchored securely to the island or pit box (see Figure 6-5).
- See the anchor or pit box manufacturer's instructions for important information.

Figure 6-5: Anchors for Pump/Dispenser

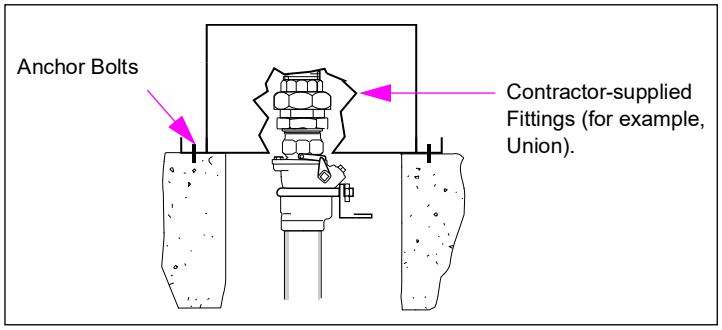

Connecting Vapor Return Line to Vapor Shear Valve

Do not create any liquid traps when connecting the vapor return line to the vapor line shear valve (see Figure 6-6). A liquid trap is a low place in the vapor return line that can accumulate fuel and cause blockage, which can cause the system to fail the vapor recovery certification tests.

Note: The contractor must provide and install the pipe union for connecting to the 1-inch NPT coupling in the unit. Some regulatory agencies require shear valves or shear sections on the vapor piping. Follow the guidelines and installation instructions from the vapor shear valve manufacturer.

Figure 6-6: Correct Vapor Line Connection Method

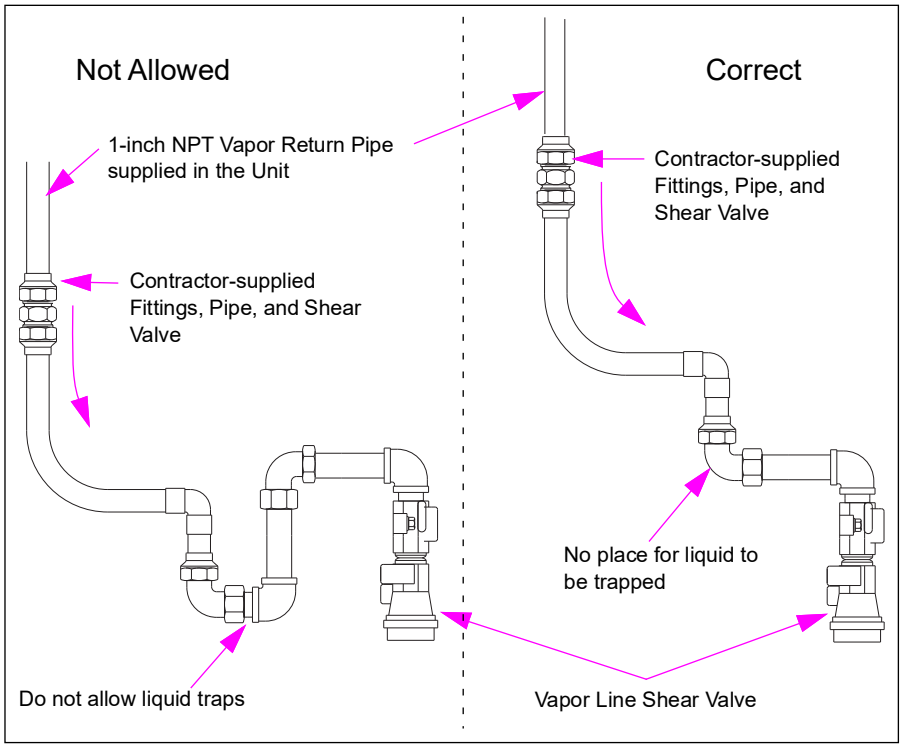

Wiring Dispenser (STP-supplied Unit) for All Models

The electrician will be routing the conduit to a factory-installed J-box. For pump wiring, refer to "Wiring Pump (Self-contained Unit) for All Models" on page 6-16.

Preparing Field Wiring

To prepare for field wiring, proceed as follows:

1. Open the side 1 lower door. For instructions, refer to *MDE-4334 Commercial and Retail Series Atlas Start-up/Service Manual*.
2. Remove the box cover and retain for re-assembly.
3. Ensure that the seal-off "Y" fitting has been installed and sealed as a first connection, where the conduit leaves the ground. This fitting must be in place and sealed before proceeding further. For more information, refer to *MDE-4333 Atlas Fuel Systems Site Preparation Manual*.
4. Run a 1-inch rigid conduit to the J-box. Run the field wiring to the main J-box through a 1-inch J-box conduit. Make connections to the 1-inch conduit with class 1, division 1, explosion-proof conduit union.
5. Wiring must be gas- and oil-resistant, color coded or tagged for identification purposes, and rated for 300 V or greater. Data wires (two-wire communications) for new installations of electronic retail units must be a twisted-pair (unshielded) with 10 to 12 twists per foot. For complete wiring information, refer to *FE-356 Atlas Pump and Dispenser Field Wiring and FE-357 Atlas Pump Retail/Commercial Field Wiring*.

Wiring Pump (Self-contained Unit) for All Models

For dispenser wiring, refer to "Wiring Dispenser (STP-supplied Unit) for All Models" on page 6-15.

Preparing Field Wiring

Self-contained factory units have the factory-installed J-box on side 1 of the unit. For information on identifying side 1 of the unit, refer to "Foundation Diagrams" on page A-3.

Figure 6-7: J-box Conduit Layout - Standard Models

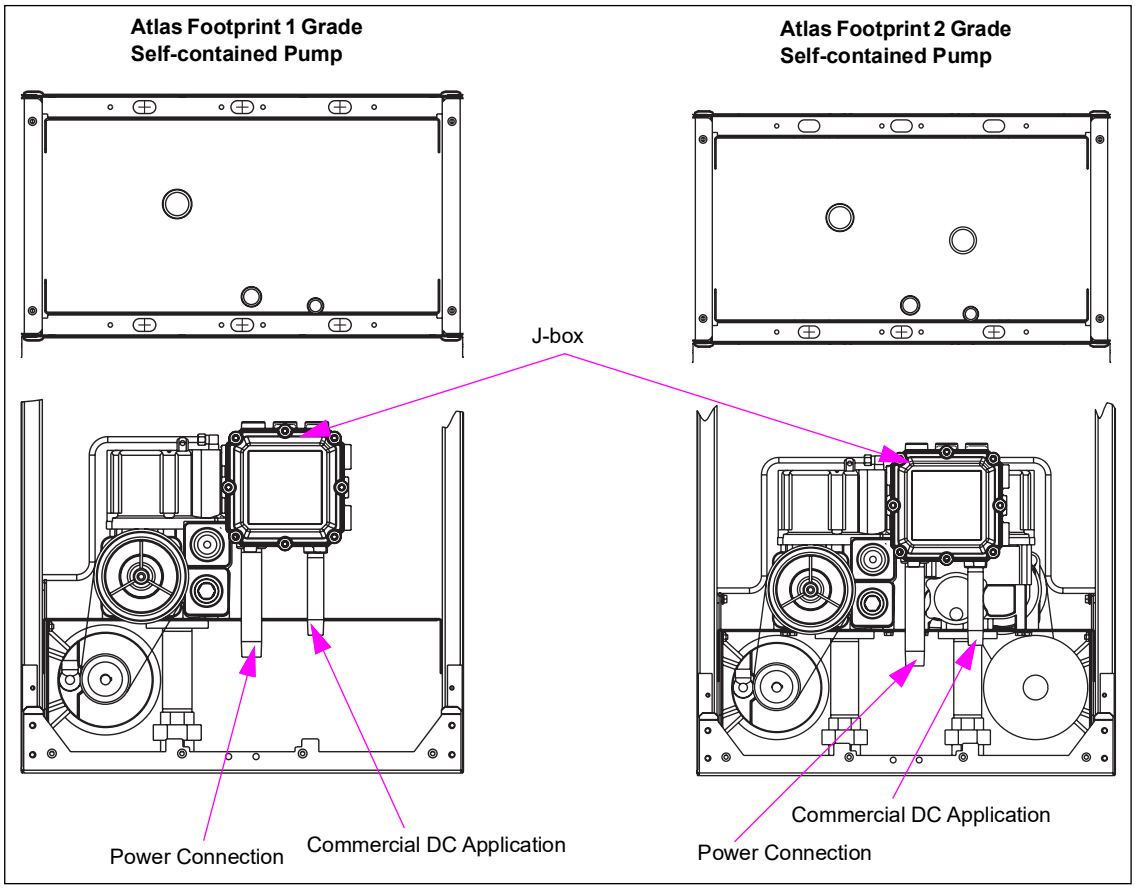

Note: The motor and ground wiring must be sized to match the load and distance (length of the wire). Wiring must be gas- and oil-resistant, color coded, or tagged for identification purposes, and rated for 300 V or greater. It is recommended that data wires be a twisted-pair with 10 to 12 twists per foot (applicable only for electronic retail units).

To prepare for field wiring, proceed as follows:

1 Open the lower panel door (on the side with the J-box, side 1 inlet will be to the left).

2 Remove the box cover and retain for reassembly.
Note: For Atlas units replacing older units, if the existing wire is too short to reach the installed J-box, a splice must be made. The contractor must provide and use a class 1, division 1, explosion-proof J-box in which connections are to be made as per the code. Refer to *"Before Placing Unit on Fuel Island" on page 6-6.*

3 For all units, ensure that a seal-off "Y" fitting has been installed and sealed as a first connection, where the conduit leaves the ground. This fitting must be in place and sealed before proceeding further. For more information, refer to *MDE-4333 Atlas Fuel Systems Site Preparation Manual*. Install an adaptive 1-inch metal conduit and union to the J-box conduit.

Testing New Field Wiring

⚠ WARNING

Sparks can ignite fuel/vapors. Fire/explosion can result in severe injury or death.

Exercise care when testing wires. Do not test when exposed fuel and vapors are present. Only use a Megger® tester on new field wiring. For existing wiring, use a digital multimeter to test for continuity/resistance.

Test the insulation of new wiring from the station and to the electronics cabinet before connecting wires. Refer to the warning above. This checks for damage that can occur when pulling wires through the conduit.

To test the new field wiring, proceed as follows:

1 Disconnect wires at both ends. If you do not disconnect wires at both ends, you may damage the pump/dispenser electronics.

2 Test the conduit wiring ends by using an insulation/Megger tester or digital multimeter as described in the warning above.

3 Connect one tester lead to the wire under test.

4 Connect the other tester lead to the ground.

5 Measure the resistance. Follow the test equipment manufacturer's instructions. Insulation resistance greater than 50 Megaohms is satisfactory. Check the local authority requirements.

6 Repeat steps 1 to 5 for all wires.

7 Repeat the test between all wires.

8 When all wiring tests are successful, pot the conduit.
Note: Ensure that enough wire is retained to connect to the wiring within the J-box of the unit being installed.

Completing Field Wiring

Field power connections are made at the J-box. To complete the field wiring, proceed as follows:

1. Remove the cover of the J-box. For cover removal, refer to "Preparing for Installation" on page 6-4.
2. Use pipe plugs to seal unused openings in all J-boxes. Make electrical connections as per the field engineering diagrams in *FE-356 Atlas Pump and Dispenser Field Wiring* and *FE-357 Atlas Pump Retail/Commercial Field Wiring.*
3. Double-check all wiring connections for wire nuts, lugs, caps, and so on. Reinstall the J-box cover. Ensure that you do not pinch any wires. All J-box bolts must be used when you replace the cover.
4. Remove all tie-wraps securing pulsers to the unit and ensure that pulsers are free to float during the operation.
5. Replace the bezel and lower doors.

Installing Breakaways, Hoses, Swivels, and Nozzles

Teflon tape must not be used for hanging hardware. Sealant must not be used for sealing connections unless the threads involved are pipe threads. O-ring seals do not require sealant. However, a small amount of silicone sealant can be used to avoid rolling or damaging of the O-ring during assembly.

When installing components in E85 units, refer to "Important Requirements for E85 Units" on page 6-1.

⚠ WARNING

Hose pulled away from the pump/dispenser exposes fuel, or the hose can pull the unit over during a drive-off. Explosion and fire or pull-off of the dispenser during a drive-off can result in severe injury or death. Installation of breakaways is required as per NFPA 30A.

⚠ WARNING

Use of incompatible materials or components with alternative fuels such as E85 can result in leaks or unexpected failures of components resulting in fire, explosion, or environmental damage. When installing components in E85 units, refer to "Important Requirements for E85 Units" on page 6-1.

⚠ WARNING

Use of hoses that are not of standard lengths may create a tripping hazard. Tripping can result in severe injury or death. Do not use excessively long hoses without a hose retractor.

Note: It is important that Teflon tape is not used on threaded connections. Use a UL-approved sealant suitable for the fuel involved, only where sealing is required (not used for O-rings). Castings may fracture during assembly or later, if Teflon tape is used.

⚠ CAUTION

Applicable to Dispensers Rated for E85 Use:

Use only UL-listed TPS PTFE pipe sealant manufactured by SAF-T-LOC International Corp.

Teflon tape must be used **only** at the inlet pipe connection.

⚠ WARNING

Hose fittings and attachments that are improperly grounded can lead to a spark that may ignite fuel or its vapors. Explosion or fire can result in severe injury or death. Check hoses, breakaways, and fittings for proper conductivity after assembly. Consult the manufacturer's instructions.

⚠ WARNING

DEF Hose Torque
Recommended torque when installing hoses is 40-50 Nm (30-35 ft-lbs). DO NOT OVER TIGHTEN or damage to the nozzle can occur. Applicable when connecting hoses to the skid tank, during internal repairs, and nozzle replacement.

To install breakaways, hoses, swivels, and nozzles, proceed as follows:

1. Attach the swivel (if used) to the nozzle. Follow the swivel manufacturer's instructions.
2. Assemble and attach the breakaway whip hose to the swivel or nozzle. Follow the hose manufacturer's instructions. For units with hose retrievers, refer to "Units with Hose Retrievers".
3. Assemble the breakaway to whip the hose. Follow the breakaway manufacturer's instructions.
4. Assemble the hose to the breakaway, followed by the unit outlet casting. Follow the breakaway manufacturer's instructions. The hose clamp must connect between the breakaway coupling and pump/dispenser outlet.

Units with Hose Retrievers

For units with hose retrievers, attach the retriever clamp to a long hose that is positioned to allow maximum extension of the hose, yet prevent a trip hazard. Use hose breakaway couplings that are installed as per the manufacturer's instructions.

⚠ WARNING

Failure to position hose clamps correctly may prevent the operation of the breakaway coupling, resulting in the unit being pulled off an island during a drive-off, with fuel being spilled. This can result in serious injury or death. Ensure that the hose clamp is installed between the breakaway coupling and unit outlet casting. This ensures that the breakaway functions properly.

DEF Dispensers - ZVA™ DEF Nozzle

A Magnetic Nozzle Adapter (M10656B001) is required for each technician servicing the DEF units.

Note: The magnetic nozzle adapter is required only for M10257B001/B003 Nozzles (blue guard). M10257B002/B004 Nozzles (black guard) do not require this ring.

DEF Nozzle (M10257B001, M10257B002, M10257B003, and M10257B004)

Figure 6-8: DEF Dispensers with ZVA DEF Nozzle

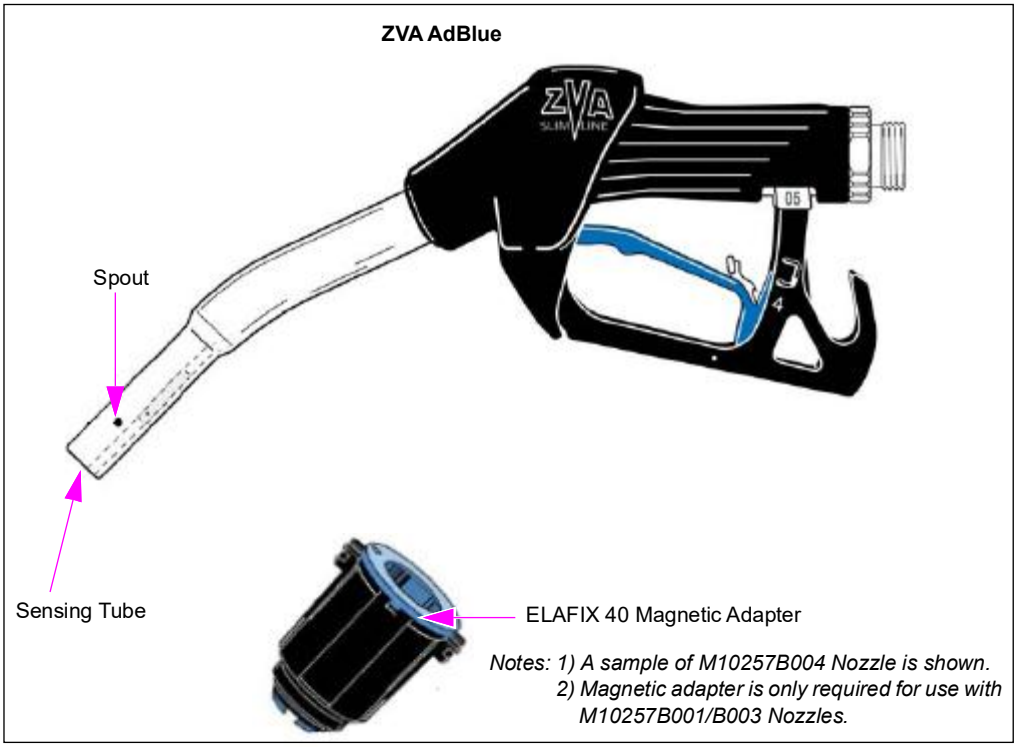

The DEF nozzle is designed to dispense DEF. No other nozzle type is currently approved. The DEF nozzle is manufactured by Elaflex/OPW (Elaflex Slimline ZVA).

- The nozzle is a non-vapor recovery nozzle. Conventional performance and troubleshooting procedures for non-vapor recovery nozzles are also applicable to the DEF nozzle.
- In addition to fluid compatibility, some nozzles require a magnetic nozzle adapter to be slipped over the spout to dispense DEF. Normally this magnetic adapter is part of the construction of the vehicle DEF tanks. It helps to prevent DEF from being dispensed into the diesel tank that will result in severe damage to the engine. The technician must have a magnetic nozzle adapter or its equivalent to dispense DEF through the nozzle during tests. The Magnetic Nozzle Adapter (M10656B001) is available from Gasboy.
- The nozzle handle also contains the activation magnet that is part of the pump handle system.
- The nozzle can freeze if the cabinet heater fails, power is lost, or the nozzle door does not drop down completely during cold weather. The nozzle must be checked for leaks and operation after thawing.

Check Valve Assembly (M10170B001)

The M10170B001 Check Valve is compatible with DEF. Conventional troubleshooting procedures for other check valves are also applicable to the DEF check valve.

Dispenser DEF Strainer (M10820B001)

Filtration is required to protect nozzles and valves. The earlier versions of the dispenser relied completely on a filter tank system. The later versions of the dispenser have a strainer. The 100-micron strainer and assembly is compatible with DEF. The strainer must be cleaned after performing the purging operation, refer to "Purging Air in DEF Systems" on page 6-22.

Hose Breakaway/Swivel (M10258B001)

The M10258B001 Swivel is compatible with DEF. If the swivel freezes in very cold weather with no heat in the cabinet, the breakaway can pop. It is resettable as per the manufacturer's instructions. Check for leaks and proper retention after repair. Follow any manufacturer's recommendations on repair procedure and the maximum number of times the breakaway can be reset.

Do Not Turn on AC Power

⚠ WARNING

It can be hazardous to apply power before electrical and mechanical inspections are complete. Hazardous high voltage, fuel, and fuel vapors may be present or equipment may be damaged.

Serious fires, explosions, electrical shocks, injuries or deaths can result. Power must not be applied to the unit and associated STPs when installing, servicing, or making electrical wiring connections or replacing any electrical components, including light bulbs. Multiple disconnects may be required.

Only a Gasboy ASC must apply power during or after installation to check for leaks, verify operation, assure sealing of all enclosures, and replacement of all covers, skins, and sheathing. Failure to comply with this mandate can result in the loss of unit warranty.

When all installation procedures are complete up to this point, the system must be purged by the installing contractor, with a Gasboy ASC on site to apply the power required to perform this procedure. For start-up instructions, refer to *MDE-4334 Commercial and Retail Series Atlas Start-up/Service Manual*. Proceed to and complete the "Installation Checklists" on page 6-24 irrespective of whether purging is performed now or later.

Purging Air from System

For New Dispensers (Purging Through Shear Valve)

Programming changes in electronic dispensers must be complete before purging can be started.

To prepare for purging, perform the following procedure for each shear valve in all units. Be observant during purging and check for plumbing leaks as you move toward the tank. Ensure that prices are set (by the ASC) before you begin purging for electronic units.

To purge air in new dispensers, proceed as follows:

1. Turn OFF all power to the STPs involved.
2. Start with the unit farthest from the tank.
3. Use a UL-approved sealant to connect a “gasoline-suitable, conductive hose” to the shear valve test port.
4. Install the mechanical valve (petcock) to the hose. Ensure that it is closed at this point.
5. Place the drain end of the closed valve in an approved metallic container. Clean up any spills promptly.
6. Return power to the STPs. Activate the STP for the line being purged.
7. Slowly open the mechanical valve until you obtain a slow, constant stream of fuel flow, while maintaining contact between the metallic valve and the can.

Purging Air in DEF Systems

Air passing through a DEF meter will trigger an immediate error code. Therefore, you must temporarily replace the meter pulser outlet to the Atlas 9800 CPU board with a standard Gasboy Atlas pulser, to properly purge the air from the system. To install a standard Atlas pulser, proceed as follows:

1. Remove power to the unit.
2. Remove the pulser data connection at the Atlas 9800 CPU board and replace with a standard Atlas pulser.
3. Restore power and activate the dispensing position.
4. Slowly hand spin the pulser to allow air to be purged through the system with the nozzle activated.
5. Purge the air, following the normal procedures, until DEF with minimal air is being dispensed.
6. Remove power to the unit.
7. Remove the temporary pulser and replace with the data connector from the Magmeter.

8 Restore power.

9 Complete the purging operation as per standard practice.

Note: The strainer must be cleaned after performing the purging operation.

⚠ WARNING

Do not substitute the pulser while power is being supplied to the unit. Lethal voltages exist within the dispenser and damage to the unit can occur if certain critical steps are not followed. It is recommended that only Gasboy-certified ASCs, who are trained in the service and operation of Atlas dispensers perform this procedure.

For New and Existing Pumps and Dispensers with Fuel in Lines (Purging through Nozzle)

⚠ CAUTION

Purging air at high flow rates through the meter can permanently damage them. Noise is not an indication of over-speed in many cases. Meter damage due to over-speeding is not covered by warranty. Follow all instructions carefully.

To purge air in new and existing pumps and dispensers, proceed as follows:

1 Lift the nozzle handle for the hose that is being purged.

2 Place the nozzle in an approved container.

3 Slowly open the nozzle until you obtain a slow, constant stream of fuel flow.

4 Purge the system with the amount of fuel as specified in the following table.

For	Pumping Quantity
Start-ups (installing new systems)	35 gallons (130 liters) per hose

Note: Improper purging of air can cause subsequent errors in calibration testing or setting. Do not purge less than the quantity shown.

5 Return the nozzle to the nozzle boot.

6 Empty the approved container into the appropriate product tank.

7 Repeat steps 1 to 6 for each affected hose in every meter.

Installation Checklists

To ensure proper and safe operation of all equipment, and to maintain warranty coverage, the following checklists must be completed at this time. Many of the items on the list must already have been checked by the electrician as covered earlier. Follow instructions in checklists and perform all the required inspections. After the inspection is complete, insert forms (less your copy) in the dispenser's electronic cabinet and ensure that there is no contact with any of the electronic component(s). Forms must be provided with each unit; if not, contact the Gasboy distributor.

Note: Always make copies of checklists for actual use. This way, you will always have an original to copy and use in the future.

Mechanical and Hydraulic Related Items

Item	Procedure	Refer To	Checked
1	Shear valves must be installed as per the valve manufacturer's recommendations. Shear point is ±3/4 inch of grade and properly mounted.	"Shear Valves" on page 7-11	
2	Flexible pipes must not be used within the dispenser. However, flexible pipes meeting local and state codes can be used below the pump/dispenser, as allowed by regulatory authorities.	*MDE-4333 Atlas Fuel Systems Site Preparation Manual*	
3	Pumps (self-contained units) must have a vacuum-actuated pressure regulating valve to prevent positive pressure at the pump base, when used with aboveground tanks.	*MDE-4333 Atlas Fuel Systems Site Preparation Manual*	
4	Pumps require a check valve.	*MDE-4333 Atlas Fuel Systems Site Preparation Manual*	
5	Hose breakaways must be used and installed as per the manufacturer's recommendations.	Manufacturer's specifications	
6	The unit must be properly anchored to the island.	"Model 9850KXTW1 Shear Valve Configuration" on page 6-10	
7	Vapor recovery piping at the pump/dispenser must have no traps or sags.	"Connecting Vapor Return Line to Vapor Shear Valve" on page 6-14	
8	Ensure that the correct nozzles, hoses, and brand panels are associated with the product being dispensed.	Specific to the unit order	
9	All code, regulatory agency, or customer-specified safety warning signs, labels, or decals have been installed.	As provided with and for the unit	
10	Long hose lengths beyond Gasboy recommendations must not be used without special retrievers. For Balance Vapor Recovery, no portion of the hose may be on the ground.	NFPA 30A	
11	Unit mounted using proper quantity, size, and strength mounting hardware.	"Model 9850KXTW1 Shear Valve Configuration" on page 6-10	
12	Wiring color coded or tagged, sized for distance and application, and resistant to gas and oil.	"Preparing Field Wiring" on page 6-15	

Electrical Related Items

Item	Procedure	Refer To	Checked
1	Equipment must be installed in conjunction with an emergency power cut-off to remove all power from the equipment in case of an emergency.	*MDE-4333 Atlas Fuel Systems Site Preparation Manual*	
2	STP isolation relays are required for all dispensers.		
3	Retail electronic only: Use twisted-pair wires as specified for new installations, or where new wires are pulled. Do not use shielded wires.	*FE-356 and FE-357 Field Wiring Diagrams*	
4	All wiring must be stranded with copper of specified gauge and insulation casing.		
5	All grounds must be properly connected as per the installation manual requirements as well as state, local, and national codes.	• "Grounding" on page 7-6	
6	Conduit must be approved for hazardous locations and properly sized for the wiring involved.	• NFPA 30A • NFPA 70 • UL 87 • NEC	
7	Properly size all circuit breakers for the units/unit options involved.	NEC and local codes	
8	All electronic unit pump/dispenser wiring must be properly spaced and isolated from wiring for electrically noisy devices such as variable speed STPs, station equipment motors, and other devices.	*MDE-4333 Atlas Fuel Systems Site Preparation Manual*	
9	All power wiring and circuit breakers to Gasboy equipment must be dedicated and not shared with other equipment.		
10	All circuit breakers to Gasboy equipment must be clearly labeled and readily accessible.		
11	Isolation relays must be used for dispensers to ensure that the power is completely removed from a dispenser during service power down.		
12	All pumps/dispensers must be wired to the same phase of electrical power.		
13	New site wiring must be Megger-tested. Old site wiring must be continuity and short-tested with a digital meter.	"Testing New Field Wiring" on page 6-17	
14	Remove all tie-wraps that secure pulsers and ensure that the pulser is able to float (in pumps).	"Completing Field Wiring" on page 6-18	
15	For units with optional TopKAT PLUS, verify if power supplied to the micro feed matches the setting of the power supply setup jumpers in the TopKAT PLUS or damage may occur.	For information on setting these jumpers, refer to *MDE-5013 TopKAT PLUS Installation Manual*.	

Calibration

Though all units are calibrated at the factory, all units must be checked for calibration and recalibrated as required, before their use by customers.

Note: Units must be properly purged before calibration or calibration verification. Incomplete purging of air can result in inaccurate calibration or errors in calibration verification testing.

Calibration is accomplished by first pumping the product into a correctly sized prover can to determine the accuracy of the unit. The size of the prover can is established by Weights and Measures (W&M), depending on the flow rate of the unit.

Adjusting Calibration for Standard, Hi-Flow, and Super-Hi Models

If calibration is required, remove the restraint (seal-wire from locking pin) on the calibration wheel located on each meter. Each pin hole represents one cubic inch of fluid. Moving the calibration wheel counter-clockwise, one pin hole creates a negative of one cubic inch of fuel; when turning the calibration wheel clockwise, one pin hole adds one cubic inch of fuel to the total flow. To calibrate the meter, the pin must first be removed and the wheel turned in the required direction to retard or add to the rate of product flow. Reinsert the pin into the hole in the wheel and test the new setting. After the correct flow of the product has been established, the pin and wheel must be wired and a seal put in place (if required, it is the owner's responsibility to report this device to the local W&M officials for their inspection before the unit is put into service).

Atlas (Gallon Unit of Measure)

For electronic retail units, temporary pricing must have already been entered into the unit to allow dispensing and calibration. Refer to "Calibration Adjustment for Ultra-Hi Models" on page 6-27.

Currently produced Atlas pumps/dispensers are precalibrated to US gallons (calibration verification is still required) and programmed to default programming values. They may be operated and purged in normal mode after entering the prices. When the unit is in gallon mode, purging can be done for units eventually to be converted to metric mode.

Figure 6-9: Calibration Wheel

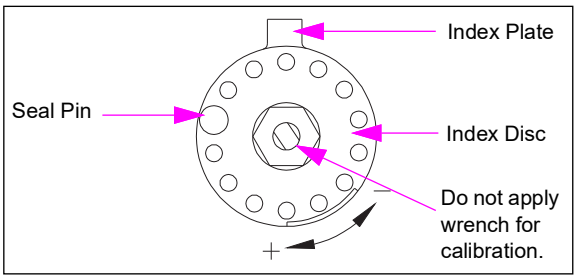

Calibration Adjustment for Ultra-Hi Models

To adjust the calibration for Ultra-Hi models, proceed as follows:

1 Check the meter registration by delivering the product to a reliable, accurate, 50 or 100 gallon (or metric equivalent) prover can.

Figure 6-10: Ultra-Hi Models

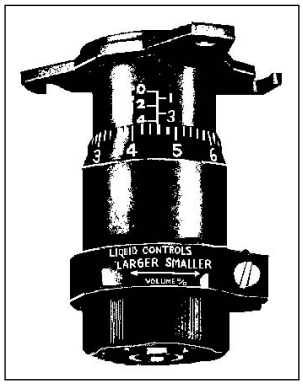

2 Convert the amount of error to gallons per 100 (provides a percent figure) or gallons per thousand (provides one-tenths of a percent figure).

3 Read the setting indicated on the adjuster. The amount of error is added to or subtracted from this setting. The adjuster is shown in graduated divisions of 1%, 0.1%, 0.02%.

4 Reset the adjuster by loosening the clamp.

To decrease the amount delivered, turn the thimble in, on the barrel.

To increase the amount delivered, turn the thimble out (unscrew it). After resetting the adjuster, tighten the clamp.

Note: Always make the final adjustment by turning the thimble in. If the new setting is a higher number than the original, turn it back beyond the required figure and come back to it.

For example: Assume that the adjuster setting at the start of the test reads 2.05. The product is run through the meter into a prover can until the counter registers 100 gallons. Assume that the prover can shows a volume of 98.7 gallons (1.3 gallons short). Since the adjuster graduations are in percent readings, this 1.3 can be added directly to the adjuster reading (2.05 plus 1.3 equals 3.35 on the adjuster). A rerun through the meter must then show 100 gallons both on the meter counter and on the prover can.

If you are measuring in increments of less than 100 gallons, use this simple formula to determine the percentage by which the adjuster must be adjusted:

(P - M) / M = A%

where **P** is the prover measurement, **M** is the meter reading, and **A%** is the percent adjustment for the adjuster.

Calibration Adjustment for E85/DEF Units [Electronic Calibration (E-CAL)]

The E85/DEF unit must be calibrated electronically. To calibrate the unit, proceed as follows:

Notes: 1) If the unit is two-sided, then the calibration procedure must be performed individually on each side.

2) The calibration switch is located on the J-box side of all three E85 unit types (see Figure 6-11).

Figure 6-11: Calibration Switch and J-box

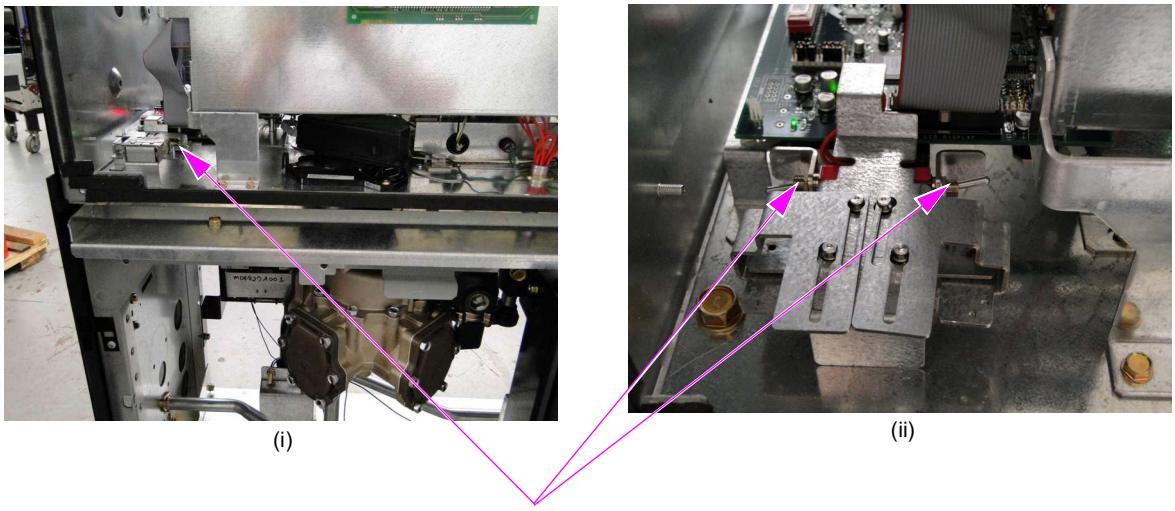

1 **Slide the back cover and turn the calibration switch to "Calibrate" position (up)**.

a Locate the calibration assembly, slide the W&M seal metal cover toward the exterior of the unit.

b Locate the inside switch for side B, or the outside switch for side A. Place the switch in the up position to activate the calibration procedure.

The number "7" is displayed in the Most Significant Digit (MSD), left most digit of the pump display and will remain throughout the procedure (see Figure 6-12).

Figure 6-12: Turning on Calibration Switch

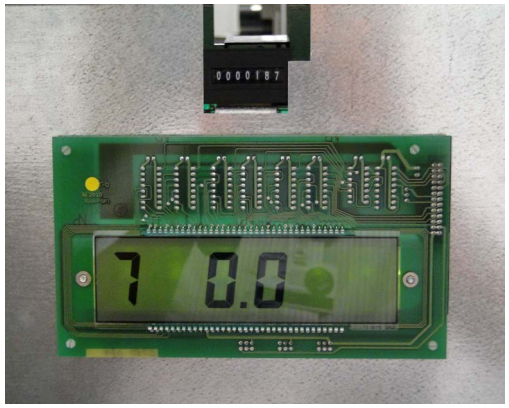

After five seconds, a can size is displayed in the two Least Significant Digits (LSD), digits to the far right of the pump display (see Figure 6-13). The can size will appear for 5 seconds before advancing to the next can size. The display will continue to scroll through can sizes until the nozzle is removed and the pump handle is switched ON.

Note: If the nozzle is not removed within 10 minutes of turning the switch to "Calibrate" position, error code 574 is displayed (57 indicates time out, and 4 indicates calibration mode error). Turn the calibration switch to "OFF" position (down), to clear the error.

Figure 6-13: Displaying Prover Can Size

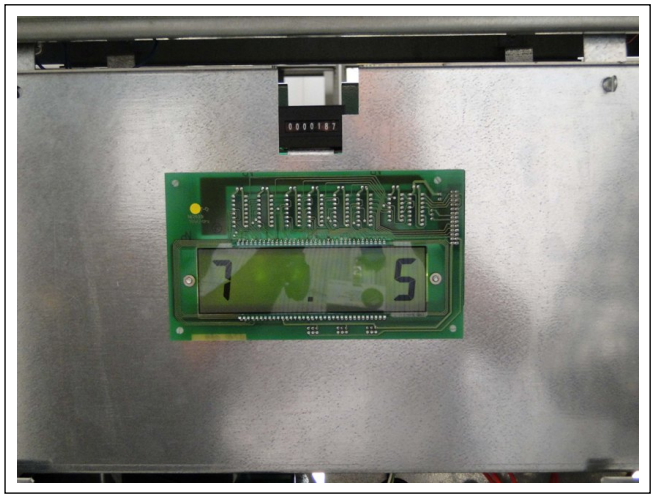

2 **After the required can size is displayed, remove the nozzle and switch on the pump handle**. This selects the can size for calibration.

Note: If the pump handle is switched on for an inappropriate can size and if the dispensing has not started, switch off the pump handle. Scrolling will resume. If dispensing has begun, switch off the pump handle, turn the calibration switch to "OFF" position, and restart calibration from step 1 on page 6-28.

3 **Dispense fuel into the prover can exactly to the zero mark**. The uncalibrated volume is displayed.

IMPORTANT INFORMATION
DEF fluid tends to dissipate air much slower than for gasoline or diesel fuel. Wait for three minutes and gently tap the prover can with a rubber mallet to ensure entrapped air is dissipated and an accurate reading can be taken.

Notes: 1) If the fuel/DEF is not dispensed within four minutes (approximately) of switching ON the pump handle (or within the time period set by the controller for pulser time out), the error code 574 is displayed indicating that the pump handle must be switched OFF to clear the error. Scrolling will resume after you replace the nozzle.

2) If the fuel/DEF dispensing has started but stopped and the pump times out, the calibration switch must be turned to "OFF" position. Otherwise, error code 993 is displayed as shown in Figure 6-14 (99 indicates that the product is not available, and 3 indicates the product is not calibrated). The procedure must then be restarted from step 1 on page 6-28.

Figure 6-14: Displaying Error Code

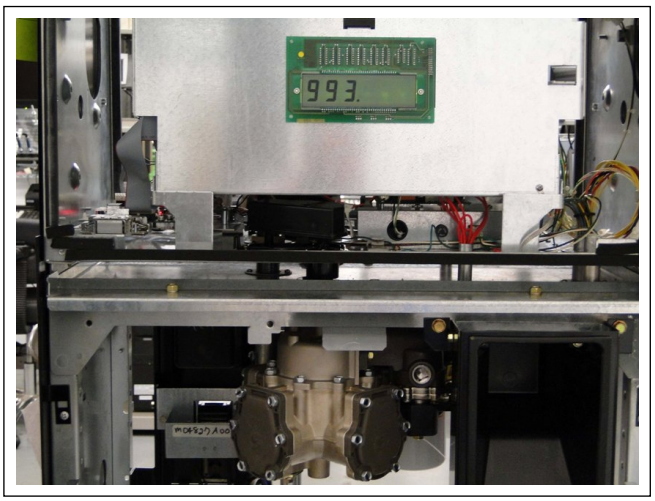

4 **Switch off the pump handle and return the nozzle to the boot**. After three seconds, the calibration factor is displayed for three seconds and then zeros are displayed indicating that the meter is now calibrated. No further transactions will be allowed until the calibration switch is turned to "OFF" position.

Note: If an additional transaction is attempted, error code 994 is displayed (99 indicates product not available, and 4 indicates calibration mode error). Turn the calibration switch to "OFF" position and switch off the pump handle to clear the error. The error code 993 is displayed indicating that the calibration procedure must be restarted from step 1 on page 6-28.

5 **Turn the calibration switch to "OFF" position and slide the switch cover back over the switch**.

Calibration and Accuracy Checks - DEF Dispensers

IMPORTANT INFORMATION

The settling time for freshly dispensed DEF is longer than for gasoline or diesel. Therefore, a three-minute wait time between dispensing the DEF into the prover can and taking the reading from the sight glass is recommended.

IMPORTANT INFORMATION

Units must be properly purged before calibration or calibration verification. Incomplete purging of air can result in inaccurate calibration or errors in calibration verification testing.

⚠ CAUTION

A stainless steel prover can must be used to calibrate DEF. Do not use a can that has been used for other fluids. Contaminated DEF can cause damage to vehicle engines, or contaminated fuel can corrode dispenser material(s), vehicle catalytic converter(s), or damage vehicle engines.

An ELAFIX 40 Magnetic Adapter (M10656B001) must be pushed over the spout when you dispense DEF into the prover can during calibration or service. For details, refer to "DEF Dispensers - ZVA™ DEF Nozzle" on page 6-20.

Each time a meter is calibrated, a volume of DEF is generated. This DEF must be properly managed and cannot be discarded into the storm sewer or where it can possibly reach surface water or groundwater. If the DEF is to be returned to the supplier, store it in a closed, leak-free container.

Avoid dispersal of spilled material and runoff. Ensure that DEF does not come in contact with soil, waterways, drains, and sewers. Inform the relevant authorities if the product has caused environmental pollution (sewers, waterways, soil, or air).

DEF poured back into the tank must be kept clean. Do not allow DEF to become contaminated during handling.

This page is intentionally left blank.

7 – Reference Information

This section contains reference information for the contractor. The contractor may or may not be required by individual contract to perform all or any of the requirements outlined. However, all installations must conform to the requirements in this section. The information in this section can be found in detail in *MDE-4333 Atlas Fuel Systems Site Preparation Manual*.

Note: The information in this section is not to be used exclusively in lieu of MDE-4333 Atlas Fuel Systems Site Preparation Manual, as not all information contained in that manual is found here.

Reference Contents

Section and Information		Location in MDE-4331
Electrical Requirements		page 7-2
	Emergency Power Cut-off Switch	
	Circuit Breakers	
	STP Control Relay Boxes for Dispensers	page 7-3
	STP Isolation Relays for Electronic Dispensers	
	Conduit	
	Wiring	page 7-4
	Wire Size	
	Atlas Commercial	
	Atlas Retail	page 7-5
	Retail Data Wire Lengths	
	Commercial Data Wire Lengths	
	Grounding	page 7-6
	CPU Switch Settings	page 7-7
	Sealing ‘Y’ Fittings	
	Field Wiring Requirements (LAN/WAN)	page 7-8
Plumbing Requirements		page 7-9
	Pipe Installation	
	Pipe Size	
	Pumps (Standard Flow)	
	Pumps (High Flow, Super-Hi, Ultra-Hi)	
	Dispensers (Standard Flow)	
	Dispensers (High Flow, Super-Hi, and Ultra-Hi)	
	Check Valves	page 7-11
	Shear Valves	

Electrical Requirements

The following are electrical requirements for installing the unit:

- Sites must be prepared in accordance with NFPA 30A, NFPA 70, and the applicable national, state, and local codes/regulations.
- All circuit breaker panels and relay boxes must be mounted securely to the wall.
- Only UL-recognized/approved components and/or systems may be used.
- Licensed electricians who are experienced with pump and dispenser installations must be used to make all electrical connections.
- Installation requires a dedicated circuit-phase system. All electronic units must be wired to the same power leg.
- An earth ground is required for all circuits.

Emergency Power Cut-off Switch

The following are the emergency power cut-off switch requirements for the unit:

- NFPA 30A and Gasboy require the installation of one or more emergency power cut-off switches.
- An emergency power cut-off switch is a single control that removes AC power to all island equipment (pumps/dispensers, STPs, canopies, lights, and so on).
- The emergency power cut-off switch must be accessible, labeled clearly, and installed away from any hazard that may occur at pumps/dispensers. Cut-off switches must not be located more than 100 feet away from pumps/dispensers.

Circuit Breakers

The following are the circuit breaker requirements for the unit:

Figure 7-1: Switched Neutral Circuit Breaker

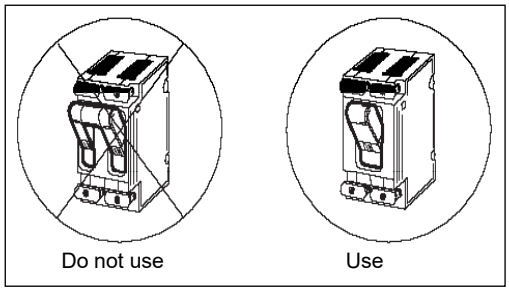

- A dedicated UL/CUL/CSA-listed switched neutral breaker is required for each circuit leading to a pump/dispenser or dispenser and STPs. It must be able to disconnect hot and neutral conductors simultaneously. Canada does not allow neutral ground switching. Single-pole breakers with handle ties cannot be used.
- Only UL/CUL/CSA-listed circuit breaker panels are permitted for use.
- Circuit breakers must be installed away from pumps/dispensers, readily accessible, and clearly marked.
- A separate circuit breaker is required for each STP (dispenser models) or each pump motor (self-contained models).
- One circuit breaker is required for each pump/dispenser to allow isolation of the pump/dispenser.

STP Control Relay Boxes for Dispensers

The following are the STP control relay box requirements for the unit:

- Gasboy requires the installation of STP isolation relays in addition to STP control relays. Combined STP control relay/isolation relay boxes are recommended.
- Each STP requires a separate control relay.
- Dispenser relay must not be used to power the STP.

STP Isolation Relays for Electronic Dispensers

STP isolation relays provide electrical isolation between dispensers and prevent damage from cross phasing. For more information, refer to *MDE-4334 Commercial and Retail Series Atlas Start-up/Service Manual* and *FE-357 Atlas Pump Retail/Commercial Field Wiring*.

Note: For a three-phase STP, use isolation relay at the input of the three-phase STP control box.

- Gasboy requires the installation of STP isolation relays in addition to STP control relays. Combined STP control relay/isolation relay boxes are recommended.
- Isolation relays must be installed for each STP control line at every dispenser or dispenser grouping on a single circuit breaker.
- A neutral wire must be routed to control relays from the dispenser circuit breaker. For more information, refer to *FE-356 Atlas Pump and Dispenser Field Wiring*.

Conduit

It is recommended that a spare conduit must be run for future high-speed communications.

- Use a minimum 1-inch conduit for all Gasboy pumps/dispensers.
- Run all power and light wires in a threaded, rigid metal conduit, or a rigid non-metallic conduit. The conduit must conform to national and local electrical codes. If a non-metallic conduit is used, it must be at least 2 feet underground. The last 2 feet of the underground run to the J-box must be a rigid metal conduit or threaded steel intermediate metal conduit.
- Never share the conduit or wire troughs with any other manufacturer's equipment (that is, speaker wires, and so on).

  Note: The same conduit may be used for routing power to the pump/dispenser and retail two-wire data loop. The two-wire data loop is a class 1 circuit.
- A metal conduit is not sufficient to provide an equipment ground. A separate ground wire must be used.
- Knock-out boxes or flexible conduits are not permitted for installation.

  Note: Extra J-boxes that are added to the pump/dispenser must be listed class 1, division 1, group C and D explosion-proof.
- All electrical fittings must be listed for class 1, group C and D hazardous locations as required by NFPA 30A and NFPA 70.
- A seal-off 'Y' fitting (for example, Killark® Type EY) must be installed on all units as the first connection where the conduit leaves the ground.

Wiring

The following are the wiring requirements for the unit:

- All pumps/dispensers must be wired as per NFPA 30A, NFPA 70 and the applicable national, state, and local codes/regulations.
- All circuits must be NEC class 1 wired [except for the speaker (intercom) circuit, which must be NEC class 2]. The speaker (intercom) circuit requires a separate 1-inch conduit.
- Only stranded, gas- and oil-resistant copper wires rated for 300 V (up to 240 VAC source) and 176 °F (80 °C) must be used.
- In the main conduit for retail units (communication), only twisted-pair or two-wire data pairs must be used for the retail two-wire data loop.
- All dispensers must be wired on the same phase.
  Note: If a Gasboy isolation relay box is installed, dispensers are not required to be on the same phase.
- Only listed wire nuts must be used for connections. Tape is not permitted.
- Seal-off 'Y' fitting(s) must be potted after all wires are run and tested to termination points.

Wire Size

The following table lists the wire size requirements:

115 V Wire Gauge Sizes per Feet/Meters of Run								
Feet/Meters	25 feet 8 m	50 feet 15 m	100 feet 31 m	150 feet 46 m	200 feet 61 m	250 feet 76 m	300 feet 91 m	Over 300 feet (91 m), use relay at motor location
Motor HP								
					115 V			
1/2	14	12	10	8	8	8	8	
3/4	14	12	10	8	6	6	6	
					230 V			
1/2	14	12	12	12	10	10	10	
3/4	14	12	12	12	10	10	10	
1-1/2	12	12	10	10	8	8	6	

Wiring

When wiring the Atlas pump/dispenser, it must be noted that there are two types of systems:

- Retail
- Commercial

Atlas Commercial

The Atlas commercial pump/dispenser utilizes two conduits, one for AC power and the other for DC signals. The two conduits must be kept away from each other to reduce signal interference. The AC conduit carries the AC power line and supplies power to valves and motors, whereas the DC conduit delivers the RS-485, LAN communications, or pulse output signals when the pump communicates with a FMS. In a standalone operation, they will not use either the RS-485 or pulse outputs.

Atlas Retail

The Atlas retail pump/dispenser utilizes only one main conduit as it does not require a DC conduit. The AC conduit is used to carry the AC wire and the two-wire interface twisted-pair.

The distinction between commercial and retail pumps/dispensers units is that the commercial unit uses a separate conduit arrangement to keep signals from interfering with one another or other noise generating devices, whereas in the retail unit it is not critical.

When installed in a separate DC conduit, 18 AWG wires are required for the installation. Although it is recommended that DC commercial pump interface wires (RS-485 or pulse output) be run in a conduit away from AC wires, they can be combined in the same conduit with AC wires, provided that a UL-listed cable with the following specifications is used:

Specification	Setting
Conductor	18 AWG stranded wire. Number of conductors to be determined by pulser requirements.
Shield	Foil-wrapped 100% coverage and/or tinned copper braid 90% coverage.
Drain Wire	Stranded, tinned copper, 20 AWG or larger/or braided shield.
Voltage Rating	Maximum operating voltage of 600 V.
Environmental	Gas- and oil-resistant; suitable for wet or dry locations.

Gasboy can supply Belden® 1063A (part number C09655), which is a UL-listed, four-conductor cable that meets the requirements listed above.
Note: Belden 1063A is UL-listed but not CSA-listed.

Retail Data Wire Lengths

Use the following table to determine the maximum length of the data wire:

For This Distribution Box (D-Box)	Distance Between the D-Box and Dispenser	Distance Between the D-Box and Console/Controller
PA0133, PA0187 G-SITE®	"Total" data wire system run no more than 2600 feet with 14 AWG	
PA0242 Transac System 1000™	No more than 2600 feet with 14 AWG	No more than 2600 feet with 14 AWG
PA0261 Universal D-Box	No more than 2600 feet with 14 AWG	No more than 2600 feet with 14 AWG
PA0306 D-Box	No more than 2600 feet with 14 AWG	No more than 2600 feet with 14 AWG

Commercial Data Wire Lengths

Use the following table to determine maximum data wire lengths:

For This D-Box	Distance Between the D-Box and Dispenser	Distance Between the D-Box and Console/Controller
RS-485 Cable	No more than 1000 feet from the J-box to the farthest CFN component	No more than 1500 feet between all CFN components
LAN Communication	No more than 333 inches from Islander to LAN jack	

Grounding

The following are grounding requirements for the unit:

- NFPA 70 requires connecting the following to the system ground:
  - Consoles
  - Relay control boxes
  - Pumps and dispensers
  - Circuit breaker panel
  - STPs
  - Electronic leak detectors
- Gasboy requires connecting each pump/dispenser to an equipment-grounding conductor (see Figure 7-2) located in the conduit, as per NFPA 70, Article 250. The following applies to the ground conductor:
  - Use a wire that is not smaller than 12 AWG.
  - Use a wire with green or green and yellow striped insulation.
  - Connect to the green grounding screw in the J-box.
  - Ground the providing power under NFPA 70, Article 250.
  - Bond the neutral bus to an approved grounding electrode.

Figure 7-2: Grounding Plan

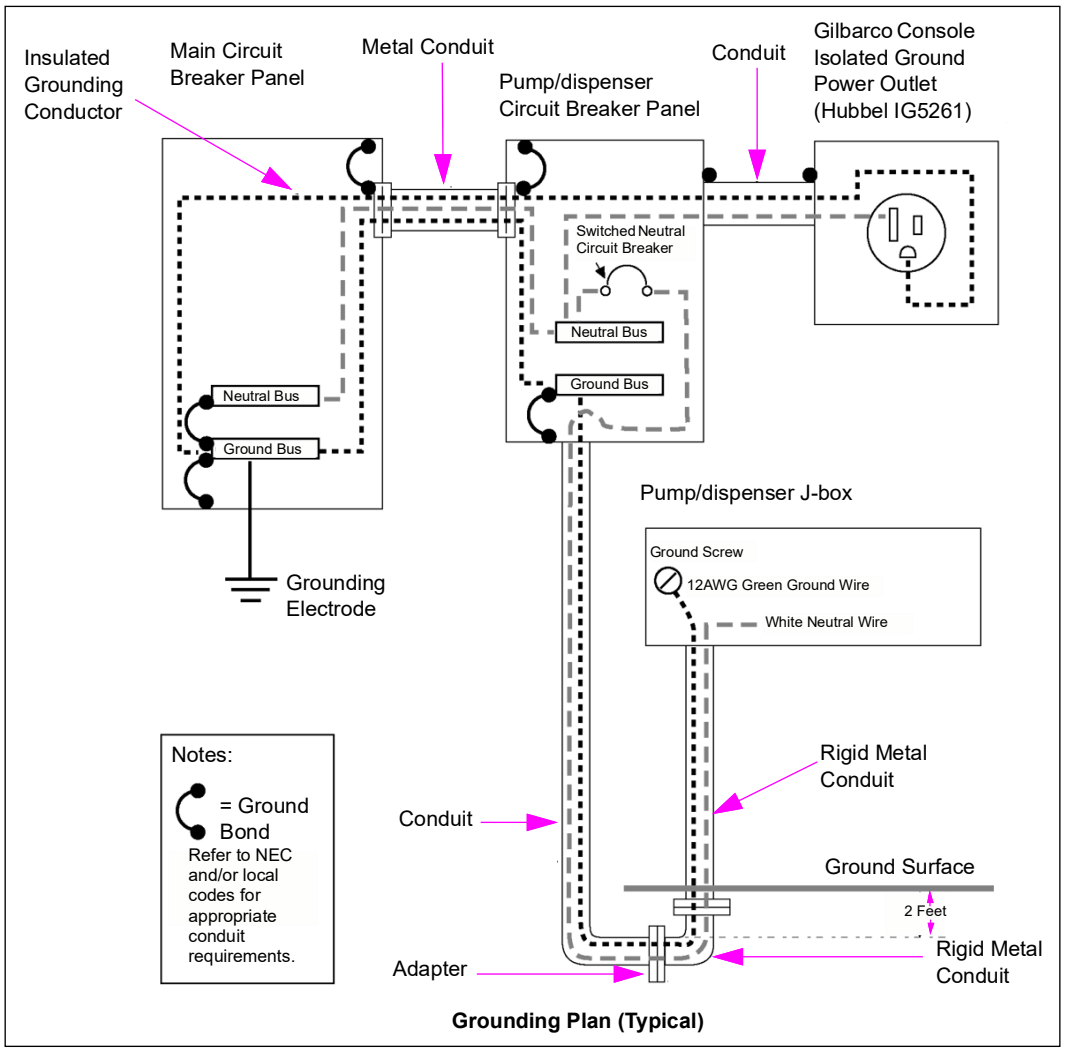

Grounding Plan (Typical)

CPU Switch Settings

For CPU switch settings, refer to the latest version of *MDE-4363 Atlas Fuel Systems Owner's Manual*.

Sealing 'Y' Fittings

'Y' seals installed in a conduit run to minimize the passage of vapors, gases, or flames from one portion of the electrical installation to another through the conduit. Fittings must be installed as per articles 501-5 and 502-5 of the NEC and the manufacturer's instructions.

Gasboy uses Killark type EY fittings and recommends them or their equivalent for vertical conduit runs. Following sealing directions are for Killark fittings only, and instructions may vary for other manufacturer's fittings. Read through all instructions completely before you begin.

1 Remove the close-up plug (see Figure 7-3).

Figure 7-3: Typical 'Y' Sealing

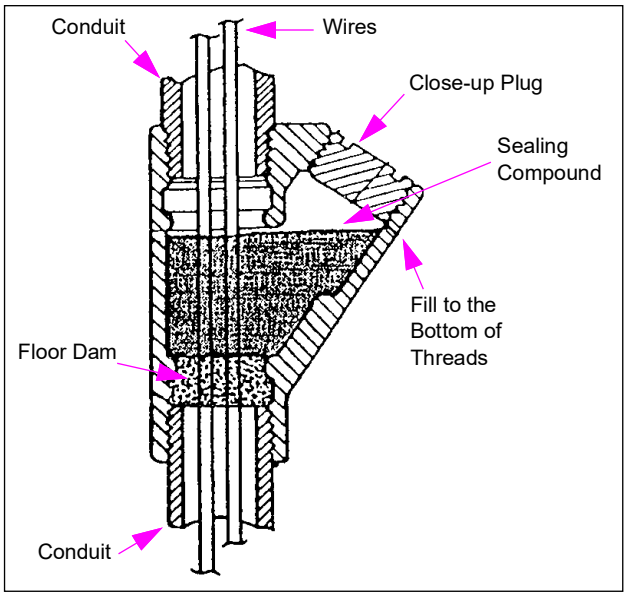

2 Separate the conductors and fill the conduit in and around the conductors using Killark type "PF" packing fiber to make a floor dam to hold the fluid-sealing compound.

Note: The floor dam must be even with the conduit stop in the lower hub of the fitting. Ensure that you do not damage the conductor insulation. Force pack between conductors and hubs and push any shreds of packing fiber away from conductors to block the leakage path.

3 Use only Killark type "SC" sealing compound with Killark fittings, and perform the following:

- **a** Use a clean mixing vessel for every batch of sealant.
- **b** Mix the compound at a rate of three parts compound to one part water by volume.
- **c** Sprinkle the compound in water while stirring, until a thick paste is formed.
- **d** Do not mix more compound than what can be used in 15 minutes.
- **e** Continue mixing for at least three minutes, until the consistency is just fluid enough to pour slowly.

4 Slowly pour the fluid compound into the sealing fitting, up to a level below the threads in the close-up plug.
Note: Pour the fluid slowly to avoid trapping air bubbles in the seal.

5 Immediately wipe off any spilt compound and close the seal with a close-up plug.
Notes: 1) The initial setting of the sealing compound will occur within 30 minutes. The compound requires a minimum of eight hours at a temperature above 32 °F (0 °C) to develop sufficient strength to withstand explosion pressures.
2) If the pump/dispenser has a factory mounted TopKAT PLUS or Atlas PRIME, for LAN/WAN wiring requirements and sealing CAT5 cable, refer to "Field Wiring Requirements (LAN/WAN)".

Field Wiring Requirements (LAN/WAN)

Wiring must be installed in accordance with ANSI/TIA/EIA 568 B Standards and Amendments.

Recommendations for CAT5E Cable

The following are Gasboy recommendations for installing the CAT5E cable (gas-resistant and oil-resistant) for SSE:

- The Ethernet® cable to the pumps/dispensers is designed to comply with forecourt wiring requirements, including gas-resistant and oil-resistant, and vapor-resistant properties.
- CAT5E cable is viable for typical installations under 280 feet of cable length, as long as the cable is not run near the equipment that generates electrical noise such as large motors and power switching equipment. An example of a noise source to avoid is a variable speed STP.
- It is crucial that the installer follows the NEC, Article 501 requirements by removing the outer jacket and spreading the wire pairs at the seal-off points to create a good vapor seal. This is required because most CAT5E cable will conduct vapors inside the outer jacket (see Figure 7-4).

Note: This is not required if Madison Cable [042GA00007 or 042GALF007 (Gilbarco part number - M12673B001)] is used. Madison cable will not conduct vapors inside the outer jacket.

Figure 7-4: CAT5E Cable Installation

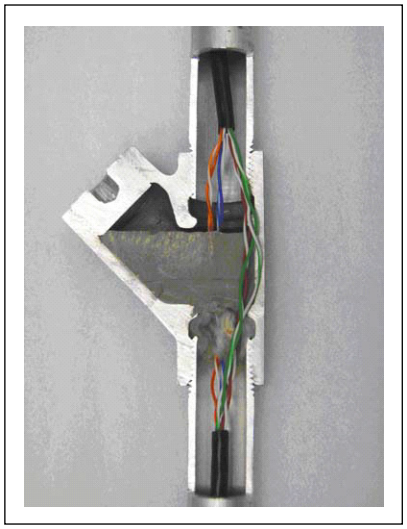

- CAT5E cable must not share the conduit with AC but can share the conduit with pulsers or other CAT5E cables.
- If using an Ethernet hub, ensure that it is a commercial quality device. Commercial Ethernet switches are a family of fixed configuration standalone devices that provide 10/100 Fast Ethernet and 10/100/1000 Gigabit Ethernet connectivity for entry-level enterprise, medium-sized, and branch office networks to enable enhanced LAN services.
- The recommended CAT5E cable is Madison Cable (042GA00007 or 042GALF007) or an equivalent. The CAT5E qualified cable has gas- and oil-resistant inner and outer insulation, and vapor-resistant properties.
- A patch panel is recommended (optional) to connect the CAT5E cable to the Network RJ-45. The patch panel and LAN wiring must be LAN certified and follow TIA/EIA LAN 568-B wiring standards.

Plumbing Requirements

⚠ WARNING

High alcohol percentage fuels such as E85 may be incompatible with certain plumbing materials and hydraulic components.

Use of incompatible materials or components with E85 or DEF can result in leaks or unexpected failures of components resulting in fire or explosion or environmental damage. When installing components in E85 units, refer to "Important Requirements for E85 Units" on page 6-1.

When dispensing alternative fuels such as E85, consult the manufacturer to verify that material of all plumbing components is compatible with the fuel (E85) or fluid being dispensed.

Pipe Installation

Refer to "PEI Publication RP100 Recommended Practices for Installation of Underground Liquid Storage Systems (Chapter 9)" and "PEI Publication RP200 Recommended Practices for Installation of Aboveground Storage Systems for Motor Vehicle Fueling." Product inlet pipes and vapor pipes for Gasboy pumps/dispensers vary in location between models. See the model-specific footprint.

- Check national, state, and local regulations for the installation of the pipe system.
- Use the containment system as required by national, state, and local regulations.
- Use a new black iron pipe constructed of UL-approved pipe material and UL-approved fittings.
- Use a 1-1/2-inch pipe for the riser-to-pump or dispenser.
- Use 2-inch risers on high-volume units that use a 2-inch shear valve.

Pipe Size

The required pipe size depends on the number of sharing lines that the unit contains, size of STPs (dispensers only), and length of the run.

Pumps (Standard Flow)

Use a new 2-, 2-1/2-, or 3-inch pipe. Use a 2-inch pipe for runs up to 50 feet to a single pump. Increase to a 2-1/2- or 3-inch pipe for longer runs up to 75 feet to a single pump with maximum lift condition. To supply every self-contained pump, a dedicated line is recommended.

Pumps (High Flow, Super-Hi, Ultra-Hi)

Except for the riser, use a new 3-, 3-1/2- or 4-inch pipe. Use a 3-inch pipe for runs up to 50 feet to a single pump. Increase to a 3-1/2- or 4-inch pipe for longer runs up to 75 feet to a single pump with maximum lift condition. To supply every self-contained pump, a dedicated line is recommended.

Piping and Plumbing Components (DEF)

Piping and plumbing components must be compatible with DEF. Typical piping used is either stainless steel or High Density Polyethylene (HDPE). In environments where temperatures drop below 15 °F (-9.4 °C), external components must be insulated and heated as required to prevent freezing. Thermostatic control of the heater circuit is recommended where heating commences above 15 °F (-9.4 °C).

Dispensers (Standard Flow)

Use a new 2-, 2-1/2-, or 3-inch pipe. If the distance from the STP to the farthest dispenser is 200 feet or less, use a 2-inch pipe. If the distance exceeds 200 feet, use a 2-1/2- or 3-inch pipe to the first dispenser and a 2-inch pipe to the remainder of the dispensers.

Dispensers (High Flow, Super-Hi, and Ultra-Hi)

Except for the riser, use a new 3-, 3-1/2-, or 4-inch pipe. If the distance from the STP to the farthest dispenser is 200 feet or less, use a 3-inch pipe. If the distance exceeds 200 feet, use a 3-1/2- or 4-inch pipe to the first dispenser and a 3-inch pipe to the remainder of the dispensers.

Check Valves

(Used on Pumps Only)

See the “PEI publication RP100 and manufacturer’s installation instructions” for information on the installation of the check valve. Install the check valve as close as it is practical to the suction unit. It must be gravity-activated with minimal or no spring load. Check valves are available from Gasboy as an order entry item for internal use to the pumping unit.

- GPU M04920B003 - Inlet check valve kit M04920K109 (1 per pumping unit)
- GPU+ M09593A102 - Inlet check valve kit M09593K109 (1 per pumping unit)

Ensure that there is only one check valve in each dedicated line. Use of multiple check valves can restrict the flow and cause cavitation resulting in significant reduction in the flow rate. If multiple units are used on a single line, check valves are required at each pumping unit.

For DEF units, the OPW-60 (M10170B002) is designed specifically to be used with the DEF being dispensed.

Shear Valves

(Generally Used on Dispensers Only)

Note: Shear valves are not required on pumps but installation is discretionary.

See "PEI Publication RP100 Recommended Practices for Installation of Underground Liquid Storage Systems (Chapter 9)" and "PEI Publication RP200 Recommended Practices for Installation of Aboveground Storage Systems for Motor Vehicle Fueling". A shear valve (see Figure 7-5) is an NFPA 30A required safety device. It closes automatically to stop the product flow during a fire or if the dispenser gets knocked off the island. It also provides a means of manually closing inlet pipes.

Follow the shear valve manufacturer's instructions for installation procedures and testing. Install a shear valve on each product inlet pipe.

- Install a shear valve on a master dispenser satellite outlet and at satellite inlet.
- Do not mount the shear valve upside down.
- Ensure that the valve linkage is accessible and displays no interference while opening or closing, from other piping, structure, or components.
  Note: The dispenser product inlet pipes must be aligned with the shear valve. Do not restrict the shear valve linkage with pipes, braces, and so on.
- Test the shear valve operation.
- Close the shear valve until the startup of the equipment. Cap the inlet pipe. This prevents dirt and other particles from entering the product line. It also prevents fuel spillage.

Figure 7-5: Shear Valve

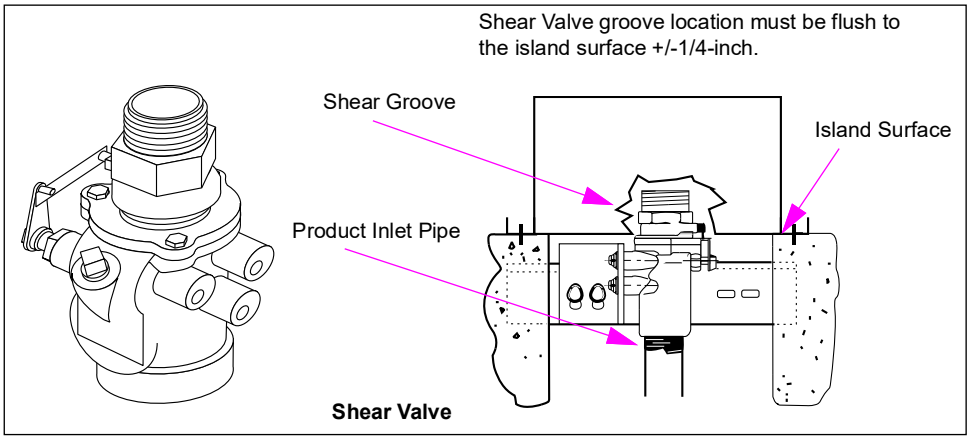

Note: For model 9850KXTW1, refer to "Model 9850KXTW1 Shear Valve Configuration" on page 6-10. Follow manufacturer's installation instructions. Anchoring requirements noted within this section apply.

Pumping unit performance concerns with M09593A102 pumping units

In case of extreme inlet conditions or excessive power runs, pumping performance maybe too loud or power drawn too high. The following parts can be ordered to improve either or both:

- 60 Hz power - Motor Pulley R18900-30 and Belt R06711-38.
- 50 Hz power - Motor Pulley R18900-34 and Belt R06711-38.

This page is intentionally left blank.

8 – Start-up and Test for Atlas Electronic Series

Installation Completion Checklist

Review the information below to verify proper installation of the Atlas electronic series dispensing unit. If the installation does not meet the criteria listed, correct the problem before the start-up is performed.

To complete the installation, proceed as follows:

1. To avoid damage to the CPU PC board, ensure that the reset is complete and that fast flow, submersible starter drive, and slow and fast satellite return wires are not shorted to the conduit or chassis.

2. The unit must be properly secured to the island.

3. All plumbing must be complete and tight. All liquid-carrying lines must be checked for leaks.

4. When the DC pulser, RS-485, or LAN lines are used in the pump for connecting to Gasboy FMSs, the AC and DC wires must not share any conduits, J-boxes, or troughs, except as noted in the conduit and pulse output or RS-485 wiring and the *MDE-5013 TopKAT PLUS Installation Manual*, communication requirements.

5. All conduit work must be complete. All J-box covers must be secured. Conduits must not be sealed until the wiring is verified through proper operation.

6. The unit must be properly grounded.

7. Before testing begins, remove any water in the tank through a fill opening, using a suitable pump.

⚠ CAUTION

Do not use the Gasboy pump or remote dispenser and submersible pump to remove water. Serious damage may occur.

8. A sufficient volume of fuel must be present in the tank to ensure that the liquid level is above the bottom of the suction pipe (suction pumps) or is high enough to allow the submersible pump to operate efficiently (remote dispensers).

9. Precautions for heating and insulation must be taken for DEF units that are installed in locations that may experience 15 °F (-9.4 °C) or lower. For wiring details, refer to *FE-356 Atlas Pump and Dispenser Field Wiring*.

10 All external piping must be protected against freezing of the DEF fluid that can cause severe damage to piping components or the dispenser with accompanying leaks. It is recommended to use reflective or light color insulation for insulation exposed to direct sunlight.

⚠ CAUTION

Applicable during installation and operation of the dispenser: DEF freezes at approximately 11 °F (-11.5 °C). Power to the dispenser and heater must always remain ON in cold weather. If power is lost and the temperature drops below this point, the system must be inspected for freeze damage before restart. For sites that experience occasional power losses or for sites that are located in very cold climates, it is recommended that a backup power generator be used to maintain constant power to the dispenser. Do not use any additives to lower the freezing point of DEF. Additives of any type must not be used in DEF. Freezing can cause damaged or inoperative hose breakaways, fluid lines or components, valves, nozzles, and meters.

Prolonged storage at temperatures above 77 °F (25 °C) can impair the quality of DEF and reduce its shelf life.

Start-up

After successfully verifying the installation against the completion checklist, the unit is ready for start-up.

To perform an orderly start-up of the Atlas electronic series unit, proceed as follows:

1 Ensure that all switches and jumpers on the CPU PCB are set properly to various operating conditions.

2 Turn on circuit breakers for the microprocessor and brand panel lights. Ensure that both lights are lit.

3 Authorize the hose for side 1 through the FMS, if available.

4 Remove the nozzle for side 1 from its holder and turn on the pump handle. Ensure that the display goes through a proper reset sequence.

5 Dispense the fuel. Ensure that the high flow valve opens, if equipped. Check all plumbing for leaks at this time.

6 Turn the pump handle off. Open the nozzle. No fuel must be dispensed at this time.

7 Ensure that the correct quantity is recorded by the FMS, if available.

8 If applicable, repeat steps 3 through 7 for side 2.

9 Run the unit through all standard calibration procedures.

10 Reset the electronic totalizers.

11 For M05953A102 pumping units, if noise/power is excessive. Refer to Pumping unit performance concerns with M09593A102 pumping units on page 7-11.

9 – Start-up for Atlas Mechanical Series

Installation Completion Checklist

Review the information below to verify proper installation of the Atlas mechanical series dispensing unit. If the installation does not meet the criteria listed, correct the problem before the start-up is performed.

To complete the installation, proceed as follows:

1. The unit must be properly secured to the island.
2. All plumbing must be complete and tight. All liquid-carrying lines must be checked for leaks.
3. When DC pulsers are used in the pump for connecting to Gasboy FMSs, AC and DC wires must not share any conduits, J-boxes, or troughs unless the conditions outlined in "Pulser" on page 5-3 and "Wiring" on page 7-4 are satisfied.
4. All conduit work must be complete. All J-box covers must be secured. Conduits must not be sealed until the wiring is verified through proper operation.
5. The unit must be properly grounded.
6. Before testing begins, remove any water in the tank through a fill opening, using a suitable pump. Do not use the Gasboy pump or remote dispenser and submersible pump to remove water. Serious damage may occur.
7. A sufficient volume of fuel must be present in the tank to ensure that the liquid level is above the bottom of the suction pipe (suction pumps) or is high enough to allow the submersible pump to operate efficiently (remote dispensers).

Start-up

After successfully verifying the installation against the completion checklist, the unit is ready for start-up.

To perform an orderly start-up of the Atlas mechanical series dispensing unit, proceed as follows:

1. Turn on the circuit breaker(s) for various control lines to the unit.
2. Remove the nozzle for side 1 from its holder and turn on the pump handle. Ensure that the non-computer register goes through its reset sequence, which consists of resetting the total volume wheels to zero.
3. Dispense the fuel. If the unit contains a slow/fast flow valve, ensure that it opens. Check all plumbing for leaks at this time.
4. Turn off the pump handle and open the nozzle. No fuel must be dispensed.

Power Reset External Adjustment

If the pump or remote dispenser unit fails to reset or shut off properly, the reset motor must be adjusted. To adjust the reset motor, proceed as follows:

1. Loosen the lock nut on the adjusting screw and back the screw out until it stops.
2. Move the reset lever to the ON position.
3. Turn the adjustment screw to the right until the reset motor starts.
4. Advance the adjustment screw an additional 1/2 to 3/4 turn. Hold the screw in this position and tighten the lock nut.
5. Move the reset lever to the OFF position, and then back to the ON position to ensure that the reset motor operates properly. The reset coupling must make one revolution and stop.
6. For M05953A102 pumping units, if noise/power is excessive. Refer to Pumping unit performance concerns with M09593A102 pumping units on page 7-11.

Figure 9-1: Power Reset for Pump or Remote Dispenser Unit

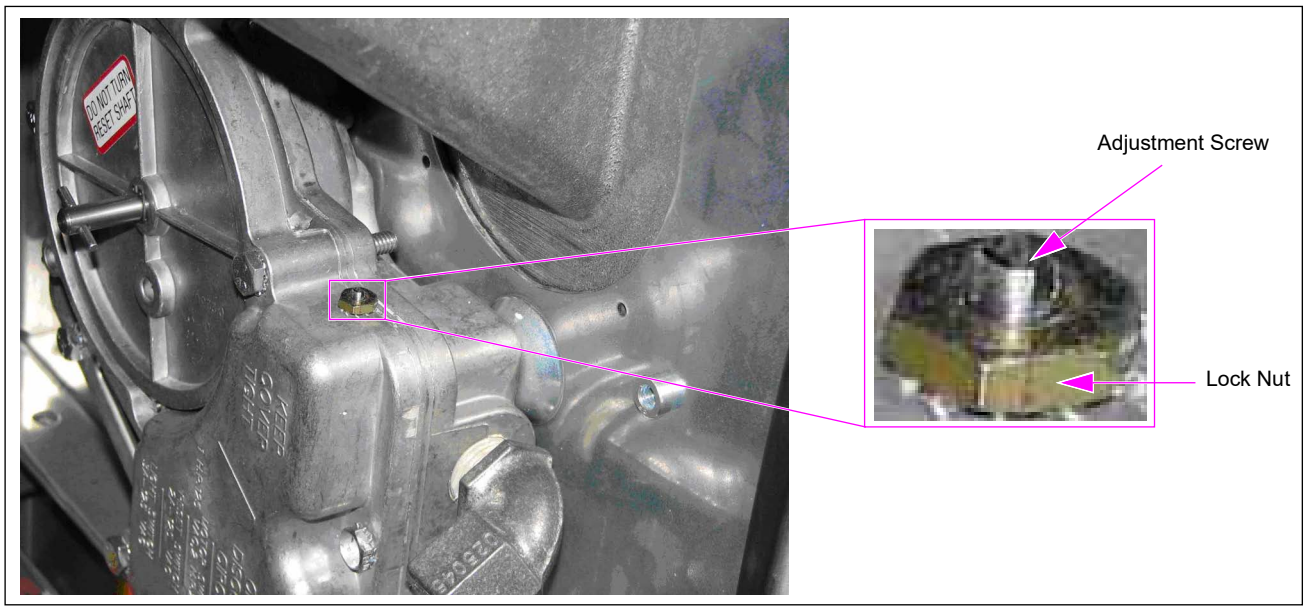

Appendix: Atlas Diagrams

Elevation Diagrams

Figure A-1: Atlas Elevation Electronic Dual Model

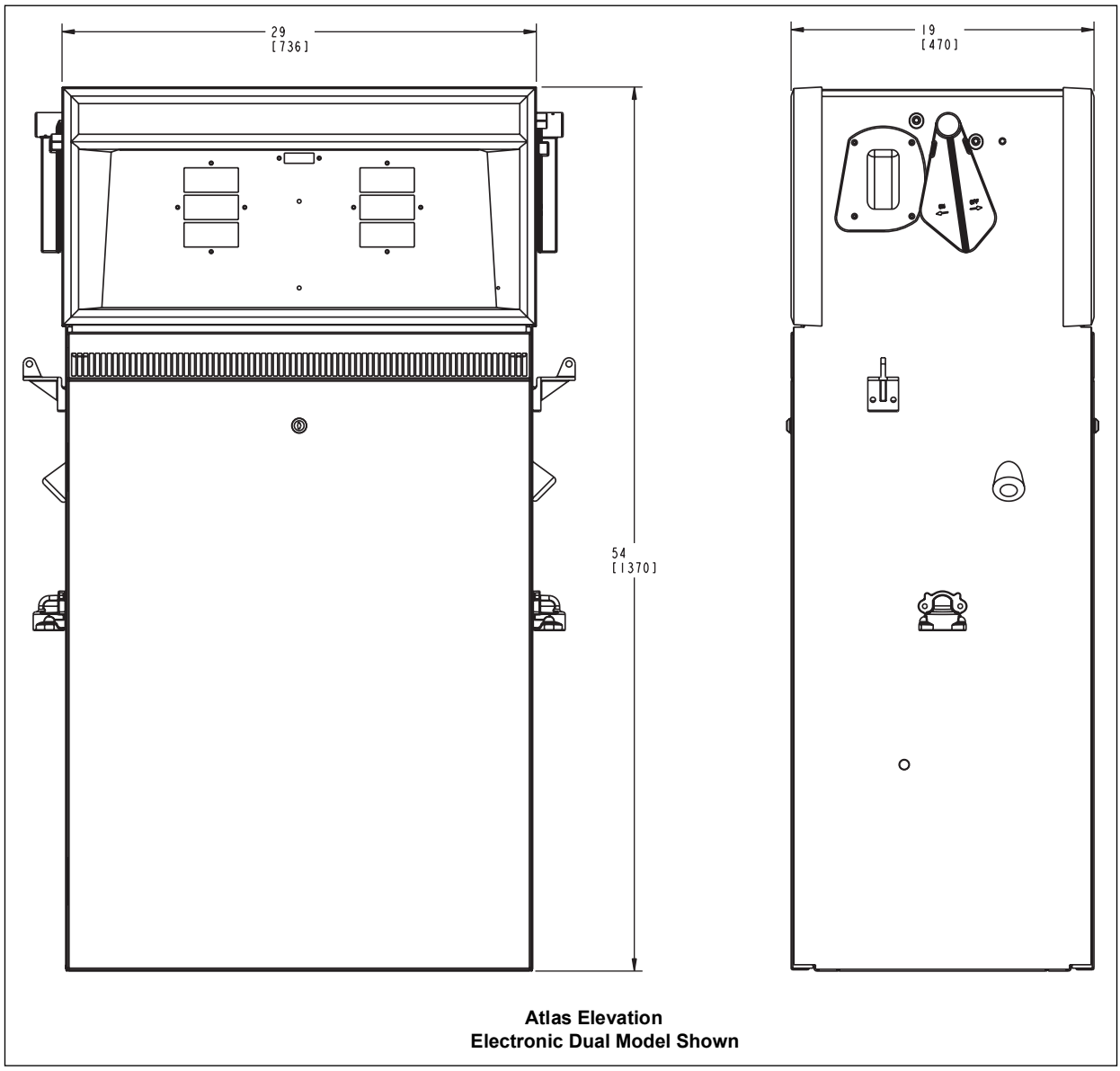

Note: Unless noted differently, all dimensions are in inches first and then in millimeters.

Figure A-2: TopKAT PLUS on Pedestal

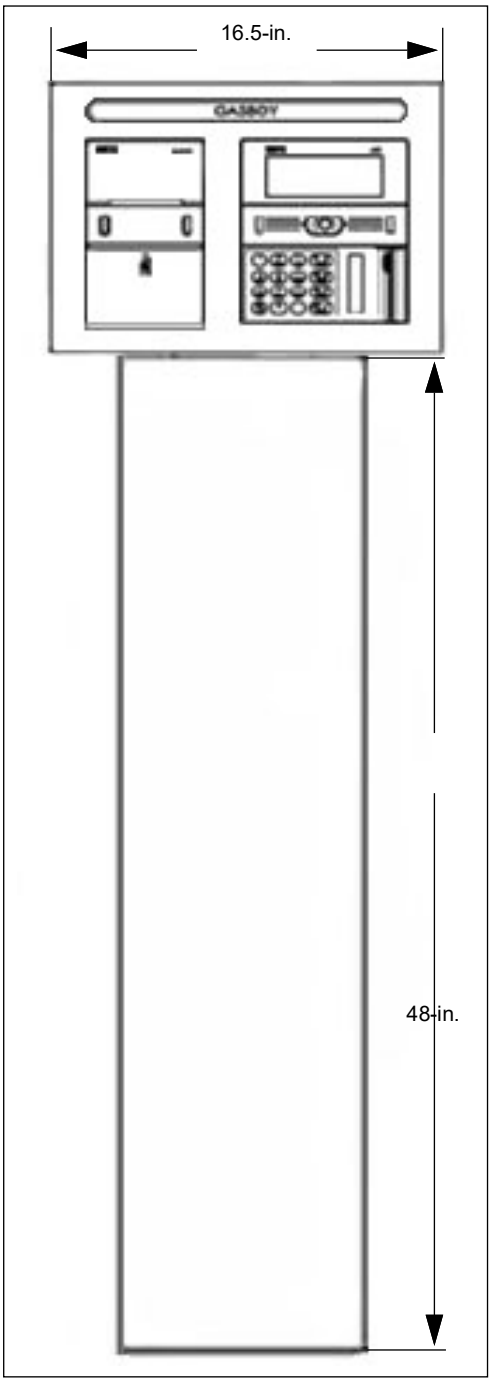

Foundation Diagrams

This section lists the details of the foundation diagrams:

Register	Flow Rating	Pump/Disp	Type	Atlas Commercial Model	Atlas Retail Model	MDE-4331 Foundation Figure Basic	MDE-4331 Foundation Figure with Satellite Piping (S)
Mech	SF	Disp	Single	9152KX	8752KX	Figure A-3	Figure A-7
Mech	SF	Disp	TW1	9152KXTW1	8752KXTW1	Figure A-3	Figure A-10
Mech	SF	Disp	TW2	9152KXTW2	8752KXTW2	Figure A-4	Figure A-8
Mech	SF	Pump	Single	9152K	8752K	Figure A-5	N/A
Mech	SF	Pump	TW1	9152KTW1	8752KTW1	Figure A-5	N/A
Mech	SF	Pump	TW2	9152KTW2	8752KTW2	Figure A-6	N/A
Mech	HF	Disp	Single	9153KX	8753KX	Figure A-3	Figure A-7
Mech	HF	Disp	TW1	9153KXTW1	8753KXTW1	Figure A-3	Figure A-10
Mech	HF	Disp	TW2	9153KXTW2	8753KXTW2	Figure A-4	Figure A-8
Mech	HF	Pump	Single	9153K	8753K	Figure A-5	N/A
Mech	HF	Pump	TW1	9153KTW1M	8753KTW1M	Figure A-9	N/A
Mech	HF	Pump	TW2	9153KTW2	8753KTW2	Figure A-6	N/A
Mech	SHF	Disp	Single	9140KX	N/A	Figure A-12	Figure A-12
Mech	SHF	Pump	Single	9140K	N/A	Figure A-11	Figure A-11
Elec	SF	Disp	Single	9852KX	8852KX	Figure A-3	Figure A-7
Elec	SF	Disp	TW1	9852KXTW1	8852KXTW1	Figure A-3	Figure A-10
Elec	SF	Disp	TW2	9852KXTW2	8852KXTW2	Figure A-4	Figure A-8
Elec	SF	Pump	Single	9852K	8852K	Figure A-5	N/A
Elec	SF	Pump	TW1	9852KTW1	8852KTW1	Figure A-5	N/A
Elec	SF	Pump	TW2	9852KTW2	8852KTW2	Figure A-6	N/A
Elec	HF	Disp	Single	9853KX	8853KX	Figure A-3	Figure A-7
Elec	HF	Disp	TW1	9853KXTW1	8853KXTW1	Figure A-3	Figure A-10
Elec	HF	Disp	TW2	9853KXTW2	8853KXTW2	Figure A-4	Figure A-8
Elec	HF	Pump	Single	9853K	8853K	Figure A-5	N/A
Elec	HF	Pump	TW1	9853KTW1M	8853KTW1M	Figure A-9	N/A
Elec	HF	Pump	TW2	9853KTW2	8853KTW2	Figure A-6	N/A
Elec	SHF	Disp	Single	9840KX	N/A	Figure A-12	Figure A-12
Elec	SHF	Pump	Single	9840K	N/A	Figure A-11	Figure A-11
Elec	UHF	Disp	Single	9850KX	N/A	Figure A-15	Figure A-15
Elec	UHF	Disp	TW1	9850KXTW1	N/A	Figure A-18	Figure A-18
Elec	UHF	Disp	TW2	9850KXTW2	N/A	Figure A-17	Figure A-17
Elec	UHF	Disp	TW3	9850KXTW3	N/A	Figure A-16	Figure A-16
Elec	UHF	Pump	Single	9850K	N/A	Figure A-13	Figure A-13
Elec	UHF	Pump	TW3	9850KTW3	N/A	Figure A-14	Figure A-14
Elec	SF	Disp (E85)	TW1	9872KX, 9872KXTW1	N/A	Figure A-19	Figure A-19
Elec	SF	Disp (DEF)	TW1	9862KX	N/A	Figure A-20	N/A
Elec	SF	Disp (DEF)	TW1	9862KX-WW	N/A	Figure A-21	N/A

Figure A-3: 1 Grade Single and TW1 Dispenser - SF and HF

Model Numbers			
8752KX	9152KX	8752KXTW1	9152KXTW1
8753KX	9153KX	8753KXTW1	9153KXTW1
8852KX	9852KX	8852KXTW1	9852KXTW1
8853KX	9853KX	8853KXTW1	9853KXTW1

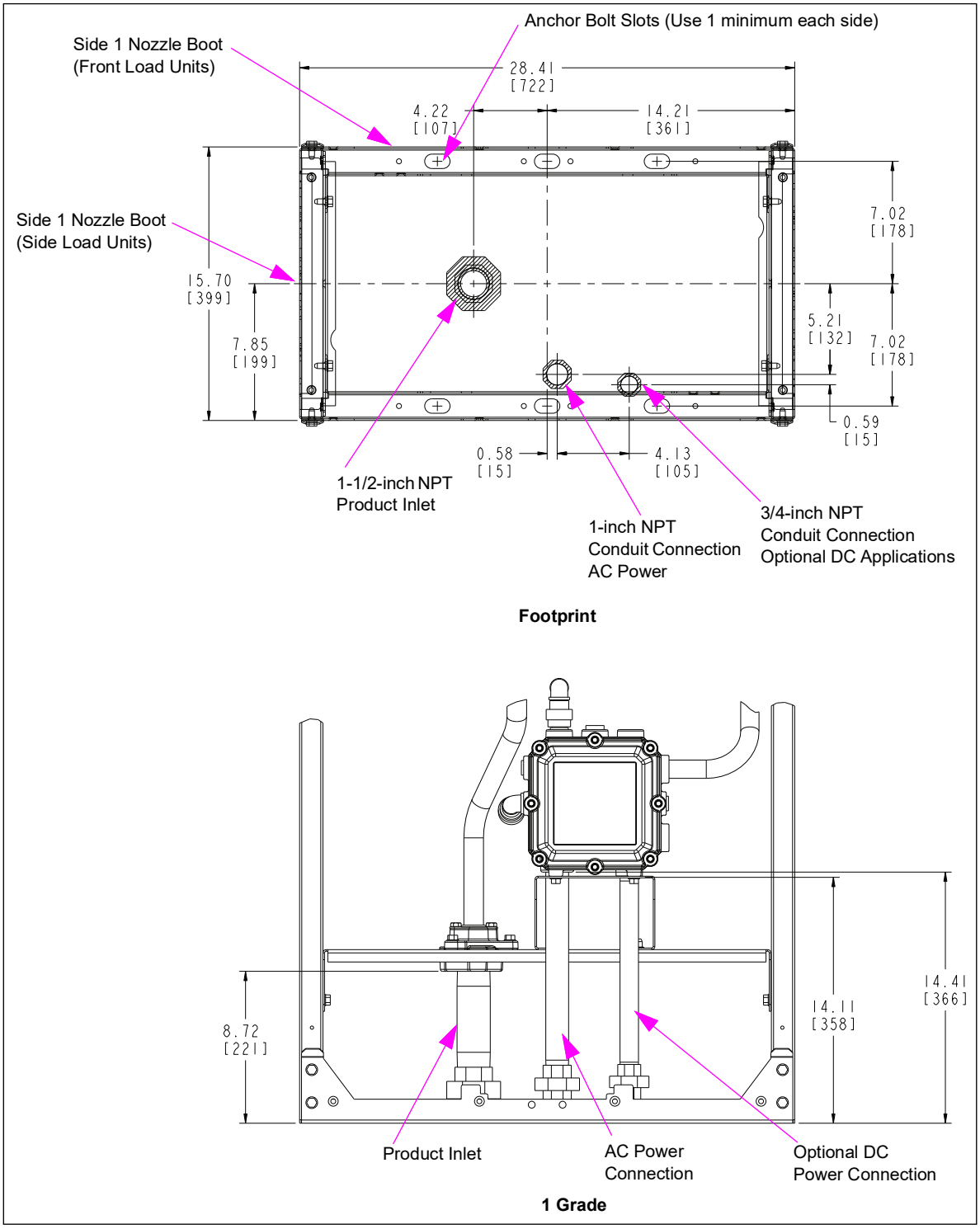

Figure A-4: 2 Grade TW2 Dispenser - SF and HF

Model Numbers	
8752KXTW2	9152KXTW2
8753KXTW2	9153KXTW2
8852KXTW2	9852KXTW2
8853KXTW2	9853KXTW2

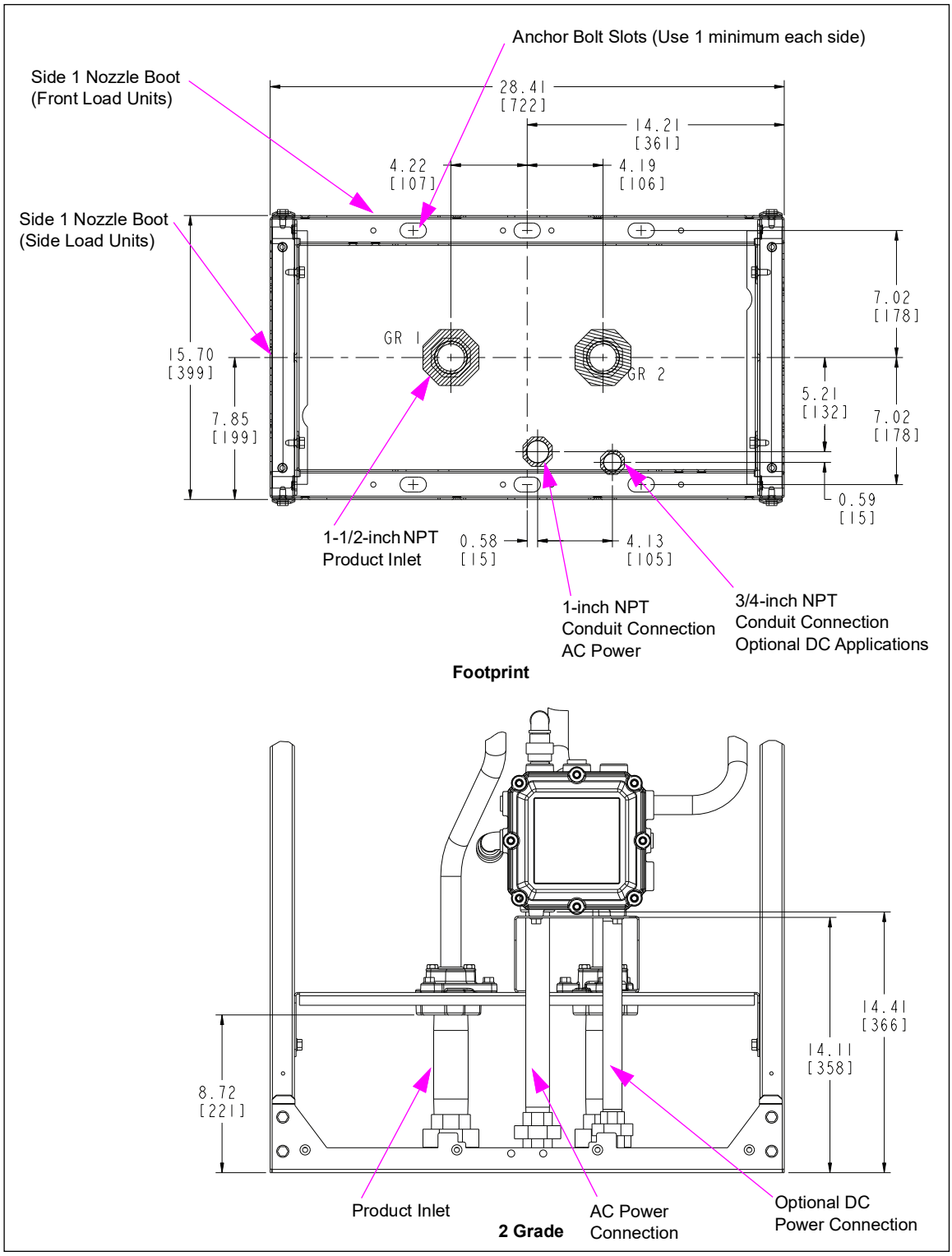

Figure A-5: 1 Grade Single and TW1 Self-contained Pump - SF and HF

Model Numbers		
8752K	9152K	8752KTW1
8753K	9153K	8852KTW1
8852K	9852K	9152KTW1
8853K	9853K	9852KTW1

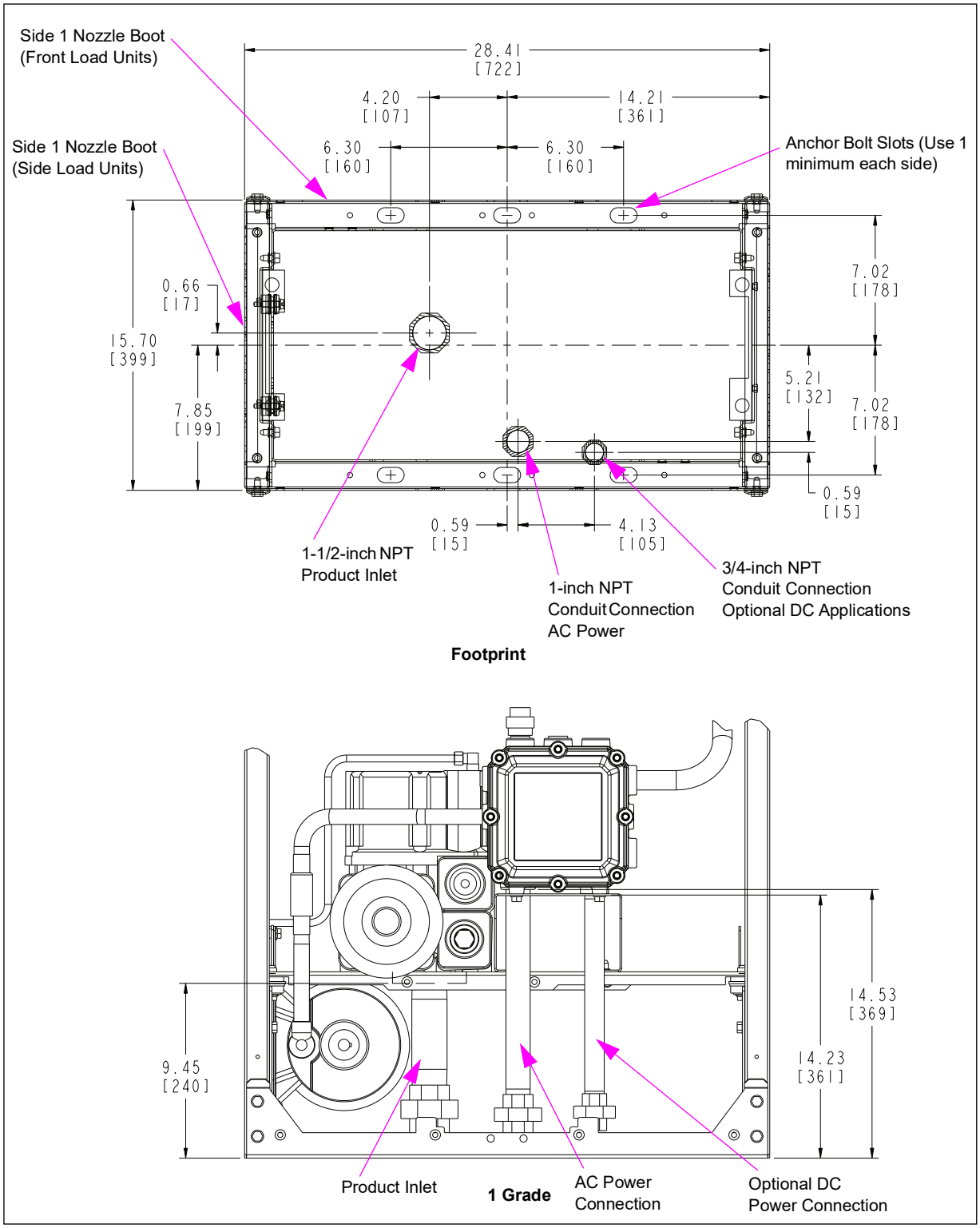

Figure A-6: 2 Grade TW2 Self-contained Pump - SF and HF

Model Numbers	
8752KTW2	**9152KTW2**
8753KTW2	**9153KTW2**
8852KTW2	**9852KTW2**
8853KTW2	**9853KTW2**

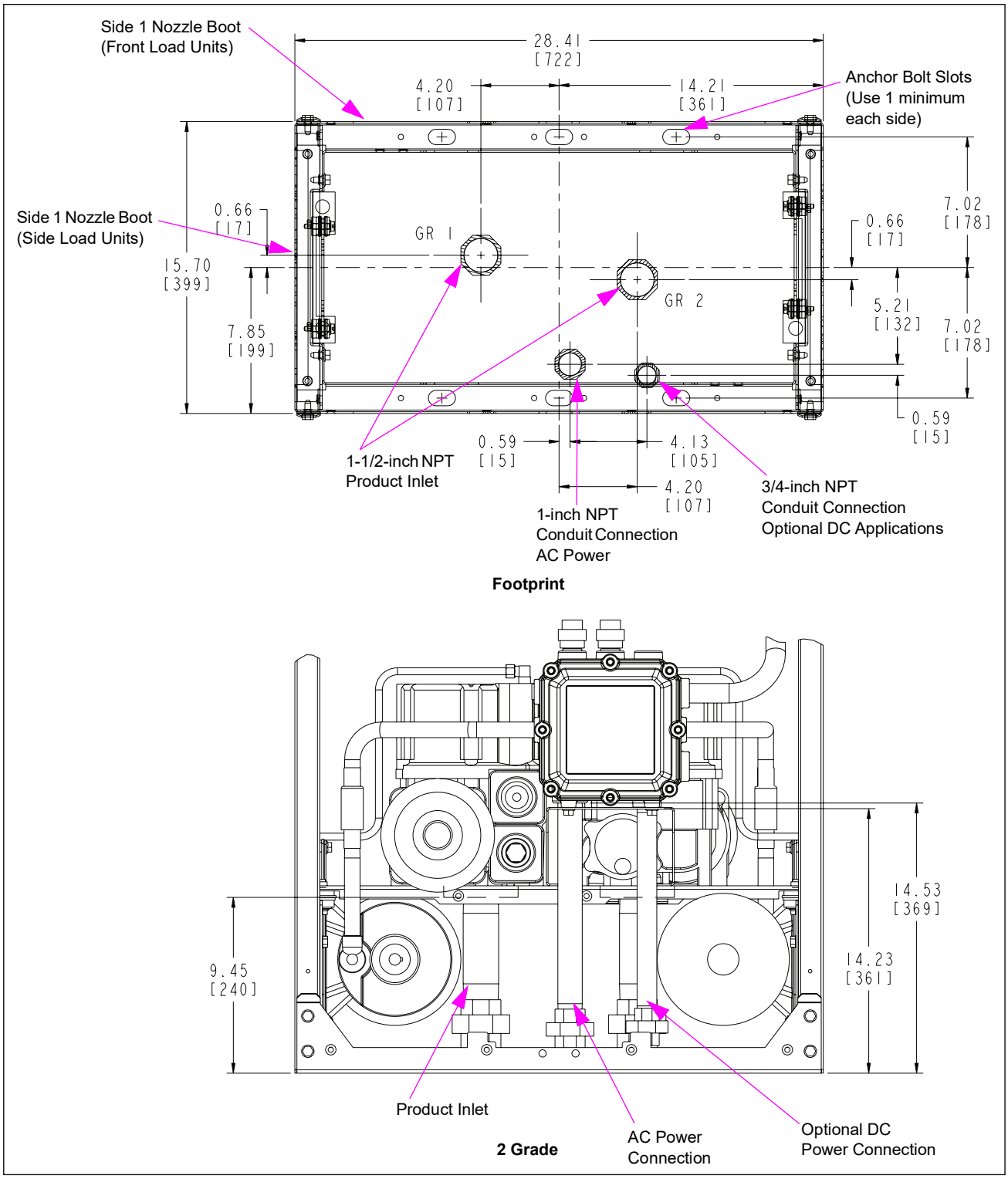

Figure A-7: 1 Grade Single Dispenser - HF with Satellite Outlet

Model Numbers
8753KX-S
8853KX-S
9153KX-S
9853KX-S

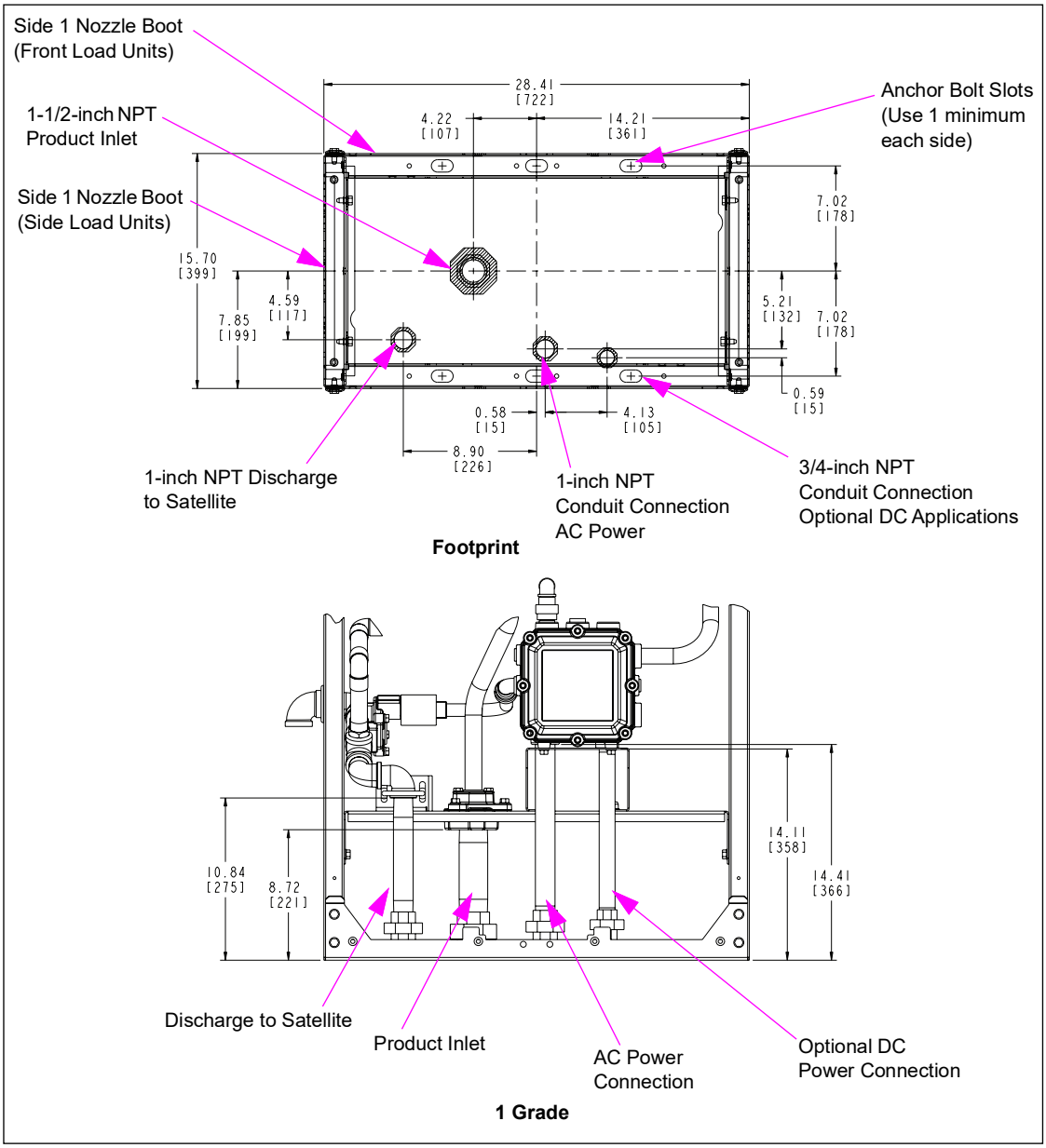

Figure A-8: 2 Grade TW2 Dispenser - HF with Satellite Outlet

Model Numbers
8753KXTW2-S
8853KXTW2-S
9153KXTW2-S
9853KXTW2-S

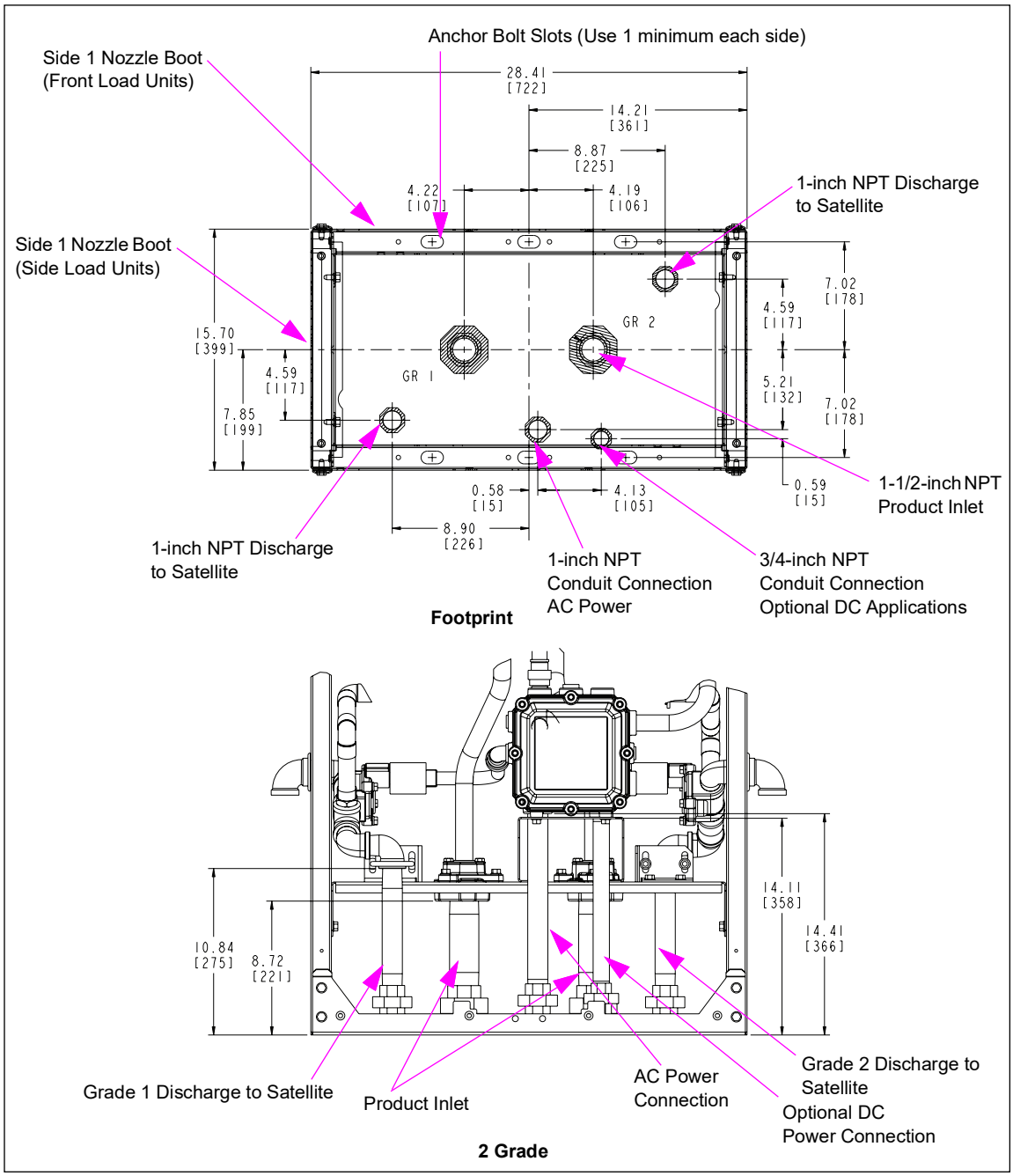

Figure A-9: Self-contained Pump - Twin Inlet Manifold (TW1-M) Model

Model Numbers
8753KTW1M
8853KTW1M
9153KTW1M
9853KTW1M

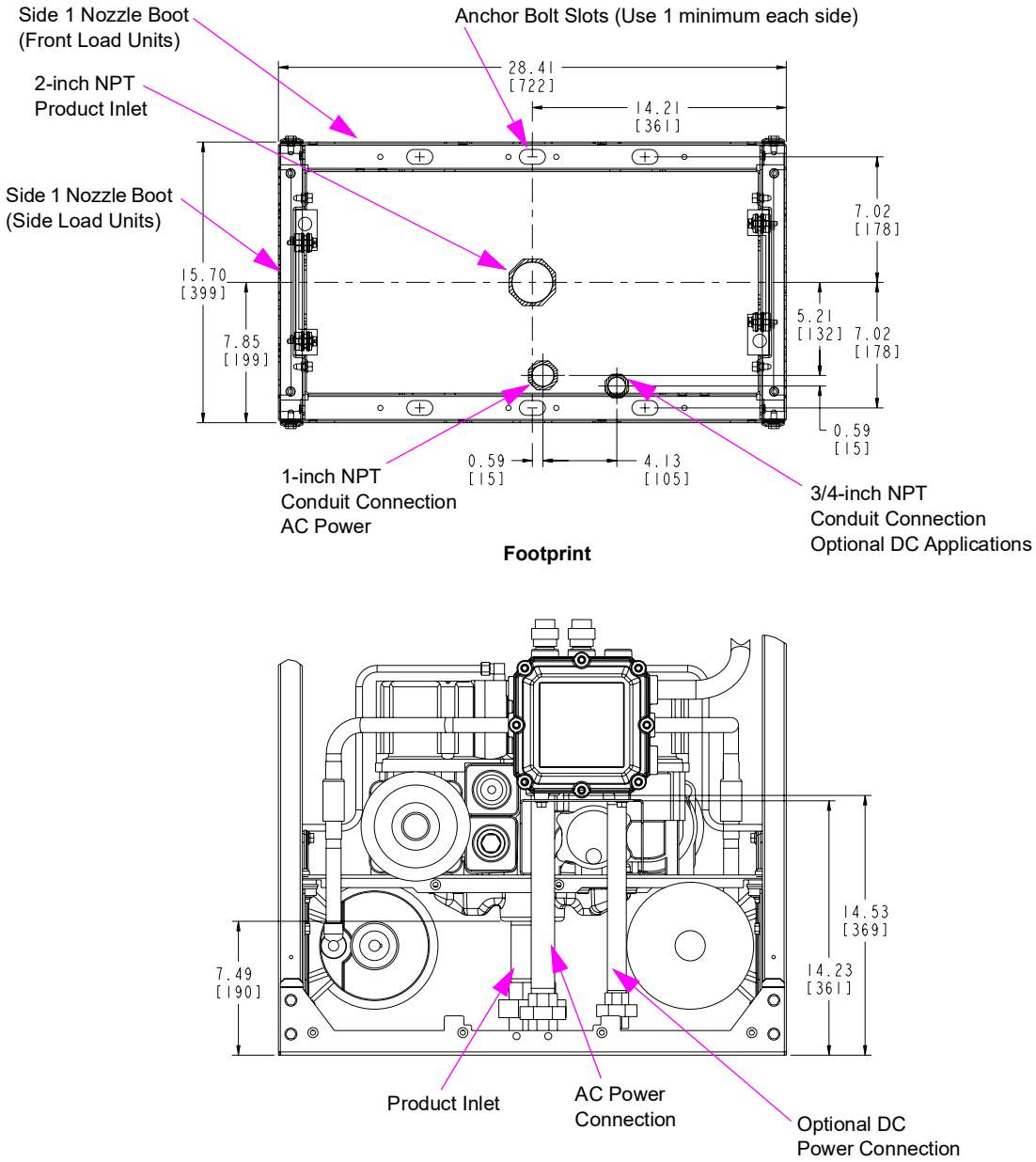

Self-contained Pump - Twin Inlet Manifold (TW1-M) Model

Figure A-10: Dispenser - HF with Satellite Outlet-TW1-Model

Model Numbers	
8753KXTW1-S	**9153KXTW1-S**
8853KXTW1-S	**9853KXTW1-S**

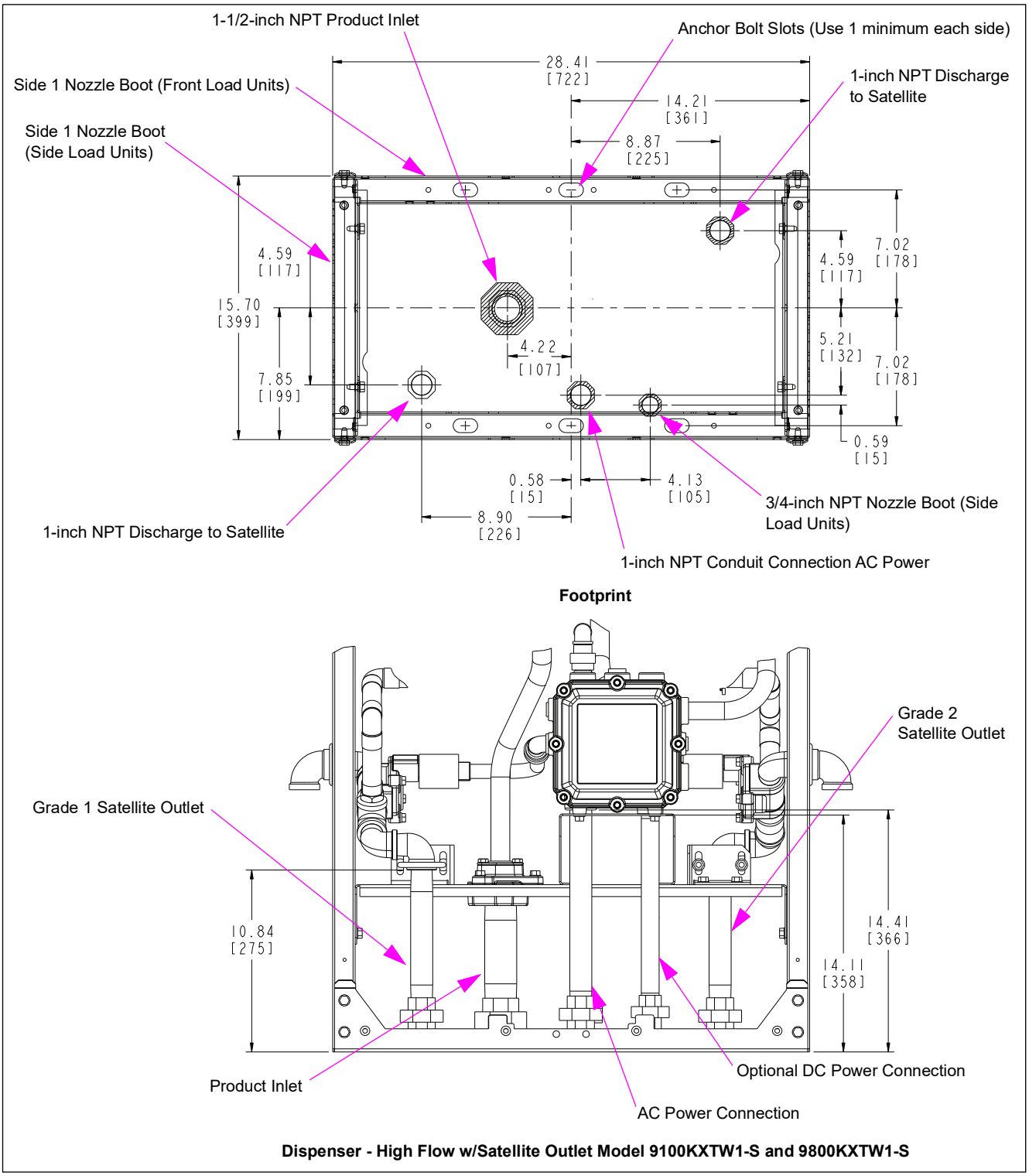

Dispenser - High Flow w/Satellite Outlet Model 9100KXTW1-S and 9800KXTW1-S

Figure A-11: Self-contained Pump - SHF Model

Model Numbers
9140K/9140K-S
9840K/9840K-S

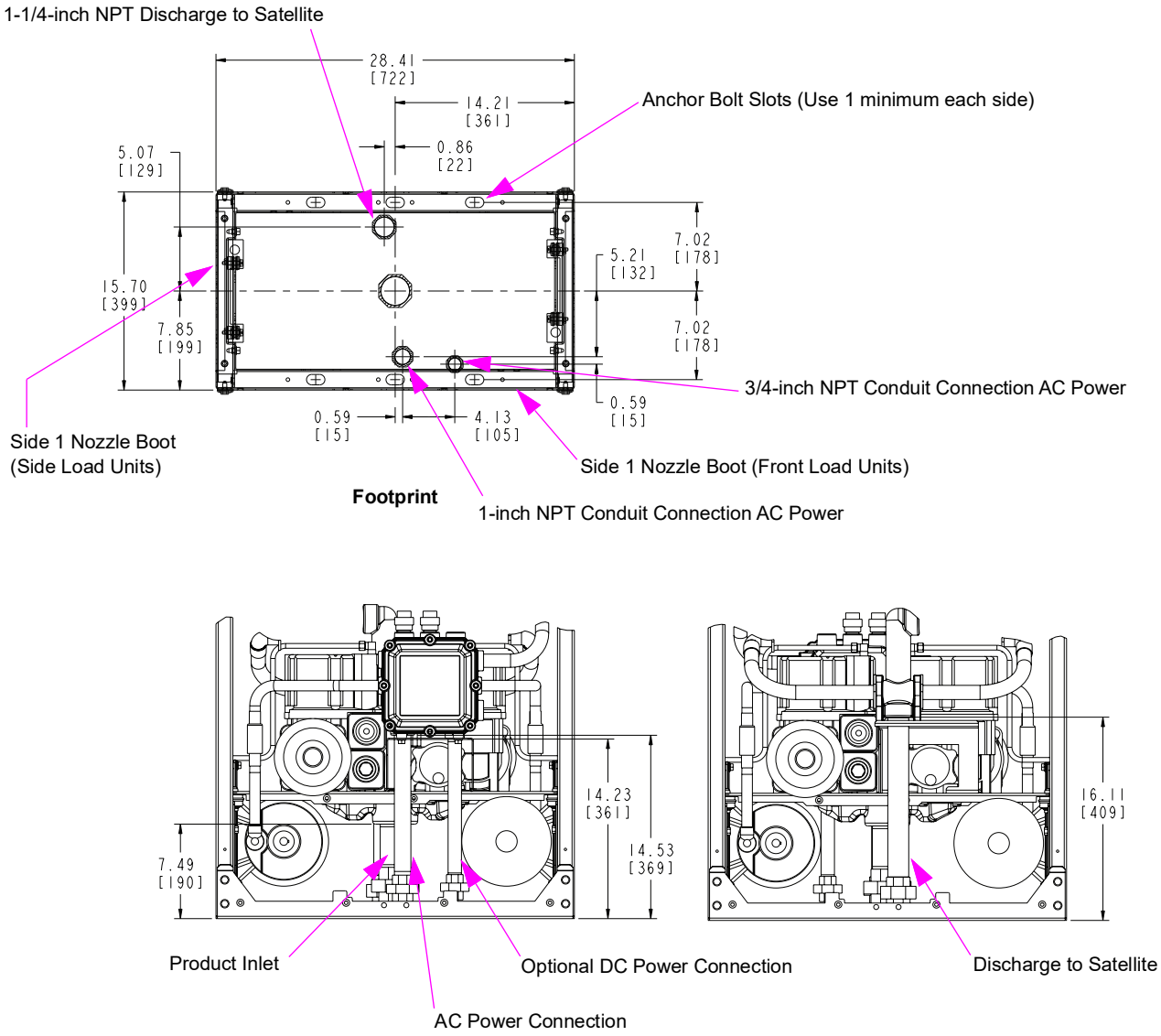

Self-contained Pump - SHF Models

Figure A-12: Dispenser - SHF Model

Model Numbers
9140KX/9140KX-S
9840KX/9840KX-S

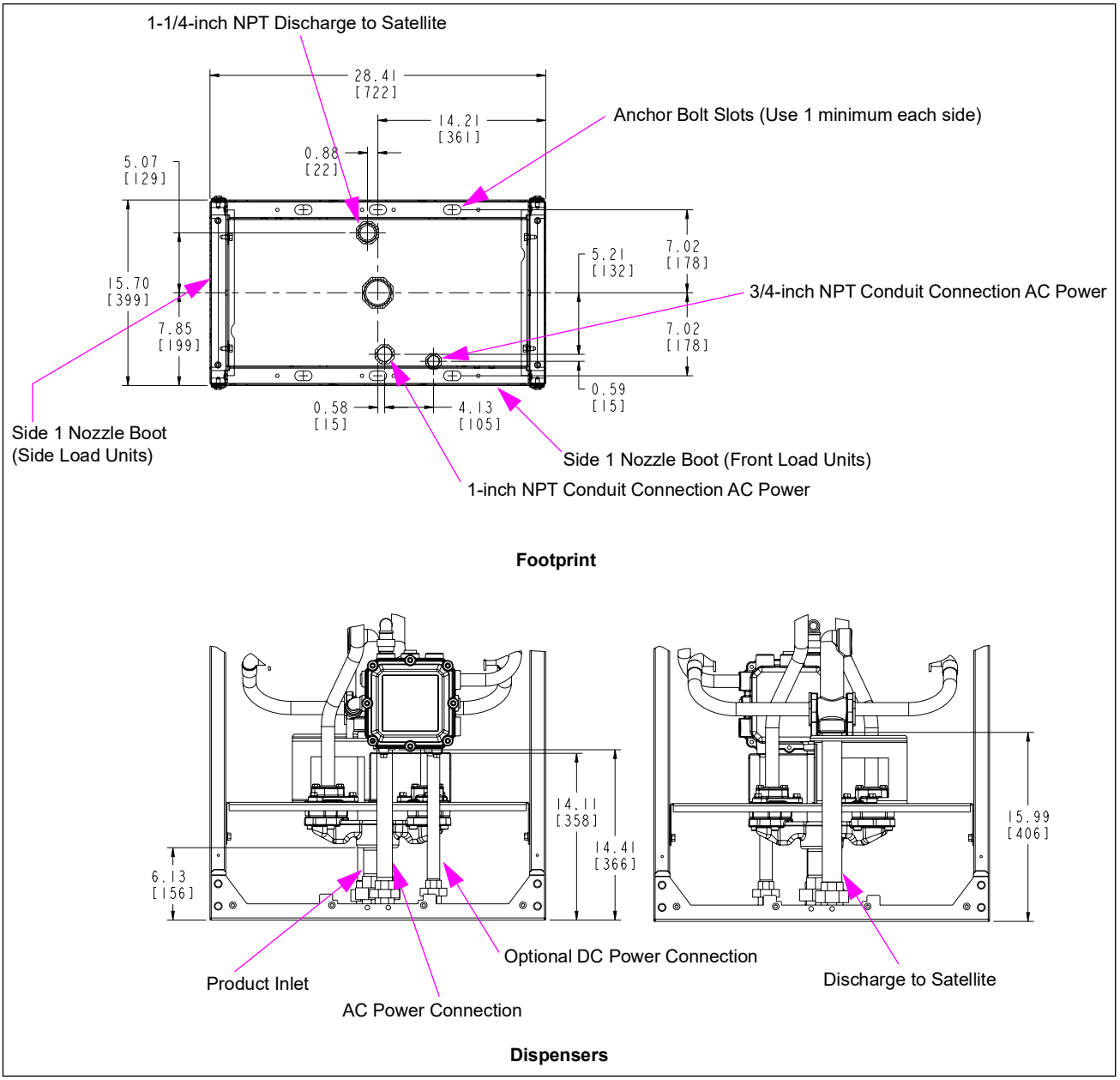

Figure A-13: Model 9850K - UHF Self-contained Pump

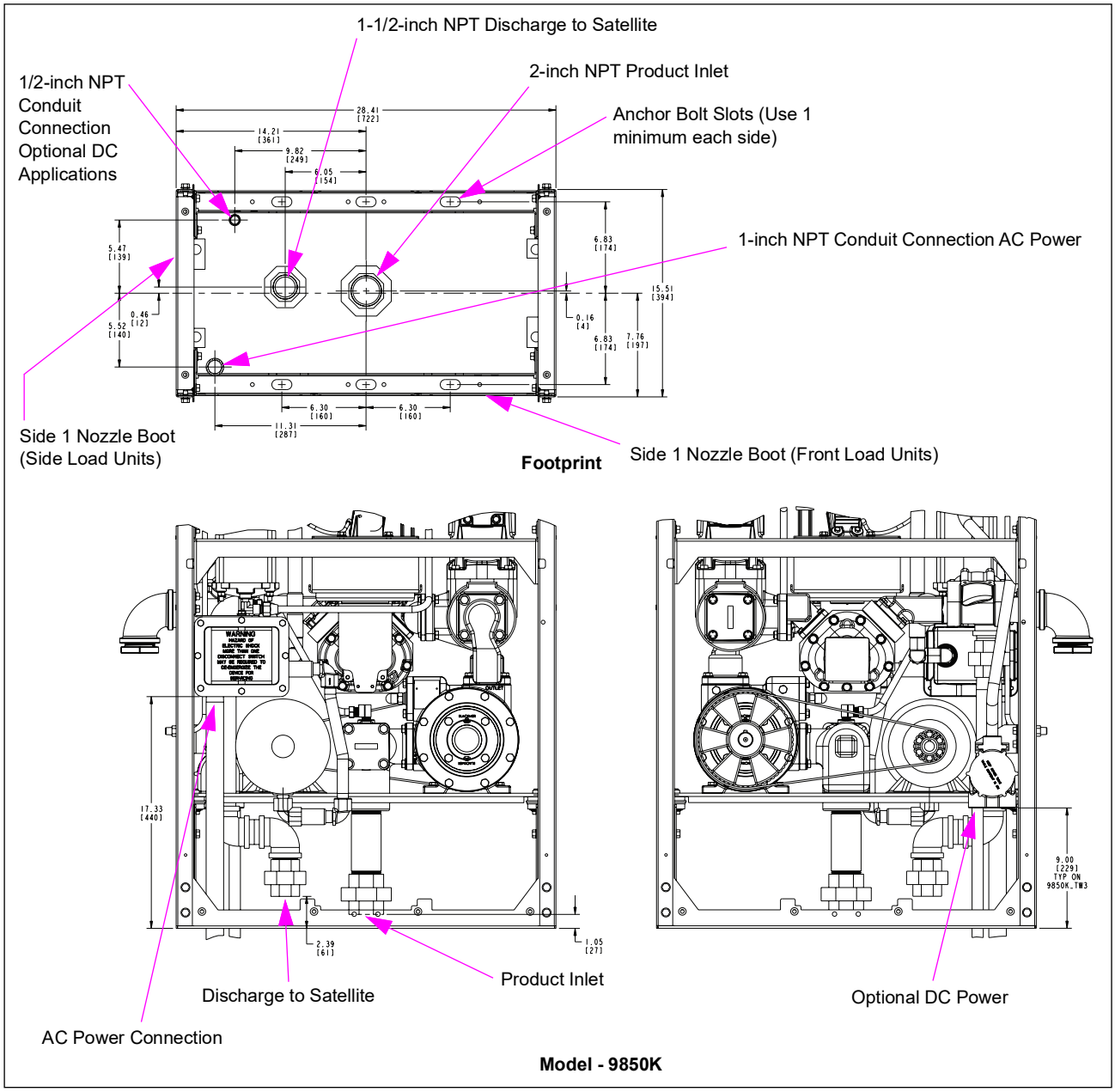

Figure A-14: Model 9850K-TW3 - UHF Self-contained Pump Combo

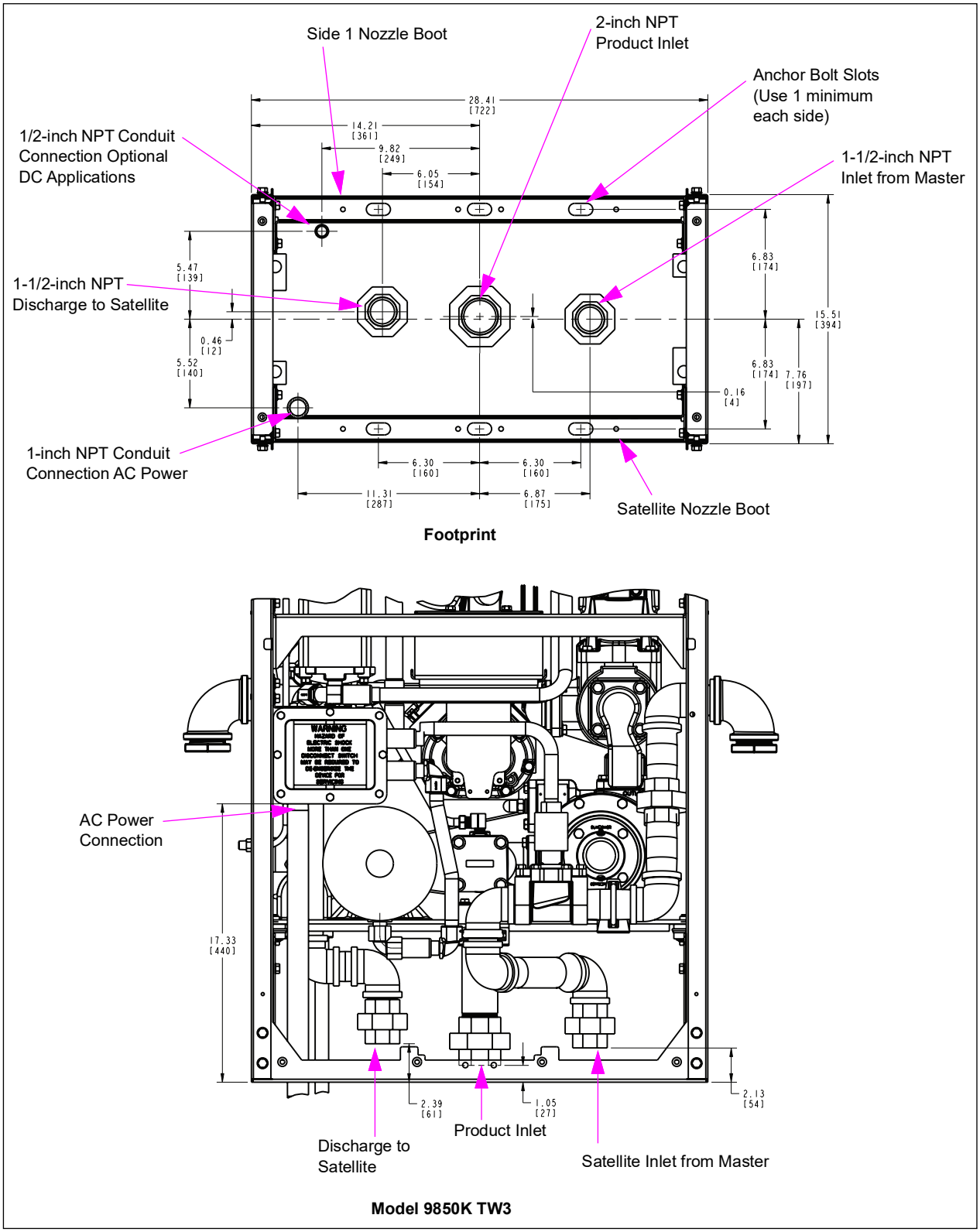

Figure A-15: Model 9850KX - UHF Dispenser

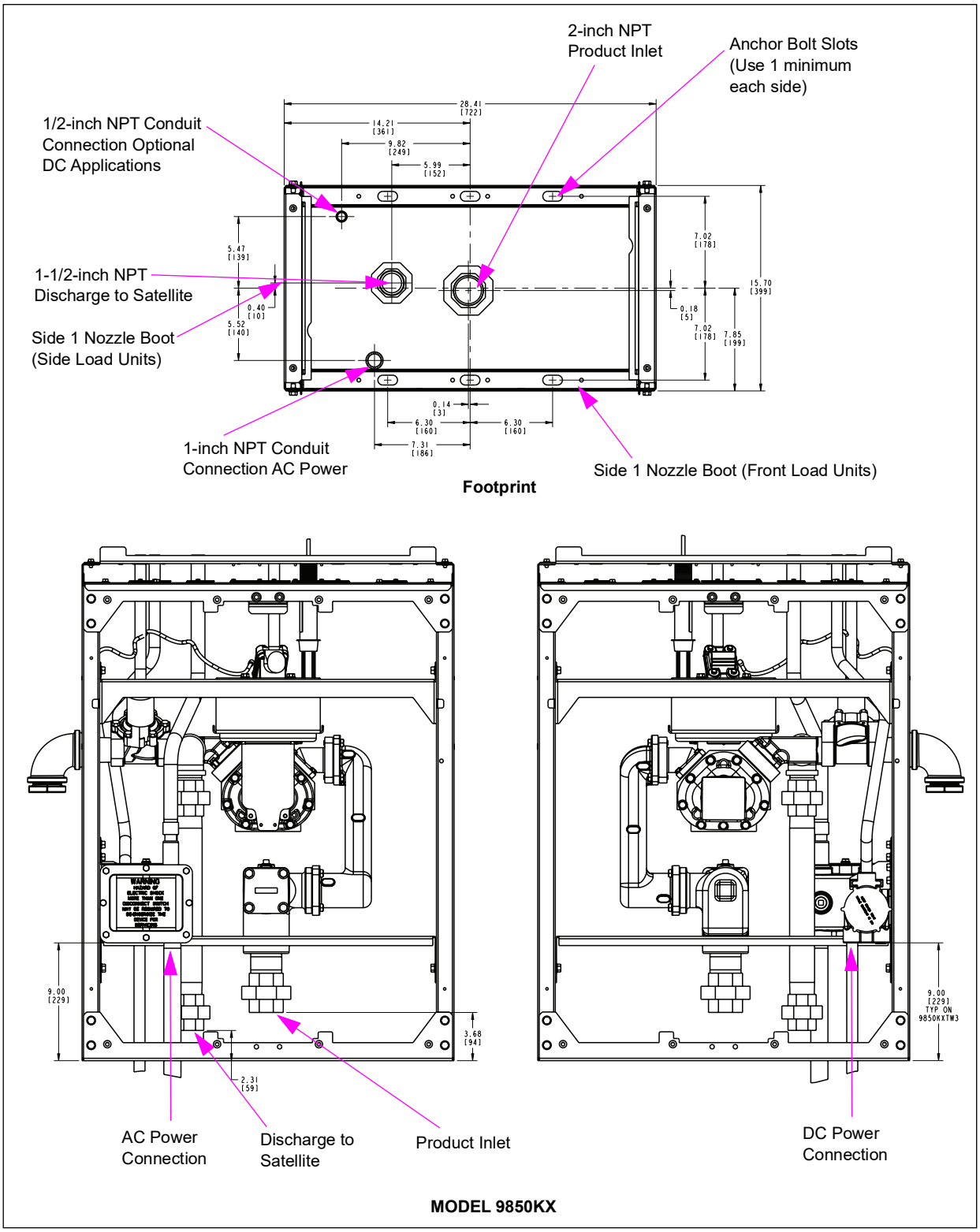

Figure A-16: Model 9850KXTW3 - UHF Dispenser Combo

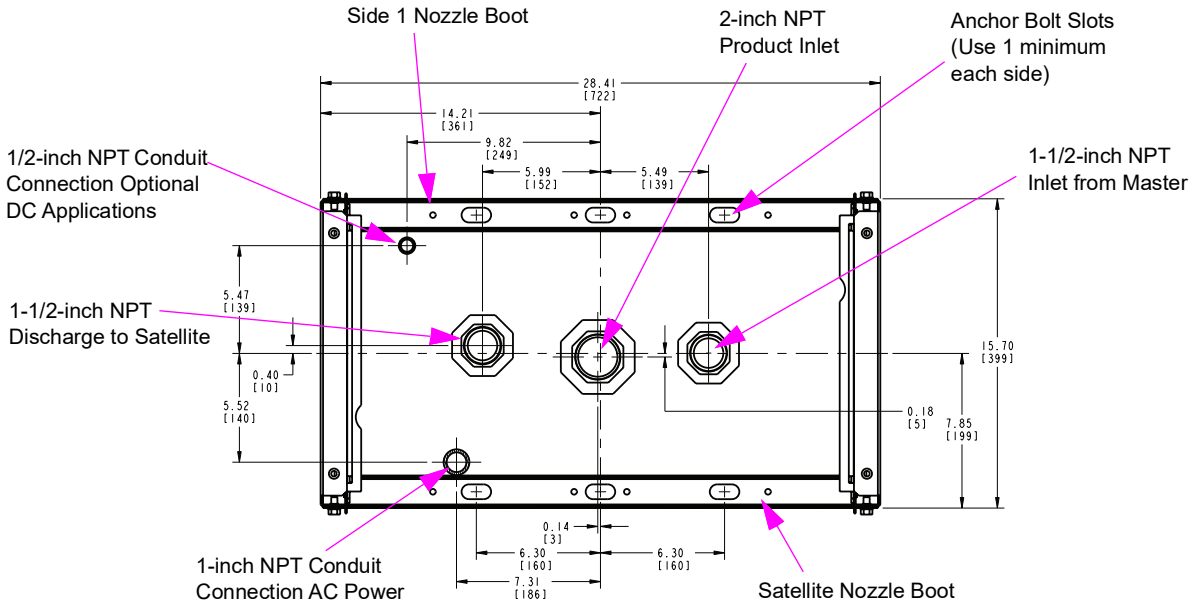

Footprint

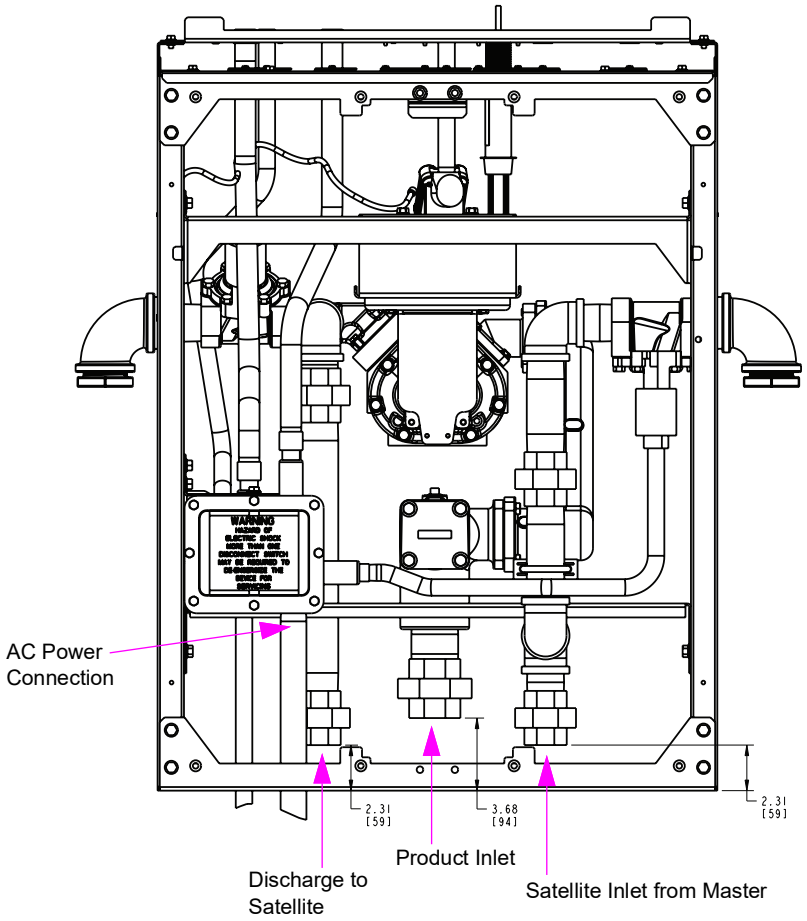

Model 9850KXTW3

Figure A-17: Model 9850KXTW2 - UHF Dispenser (Dual)

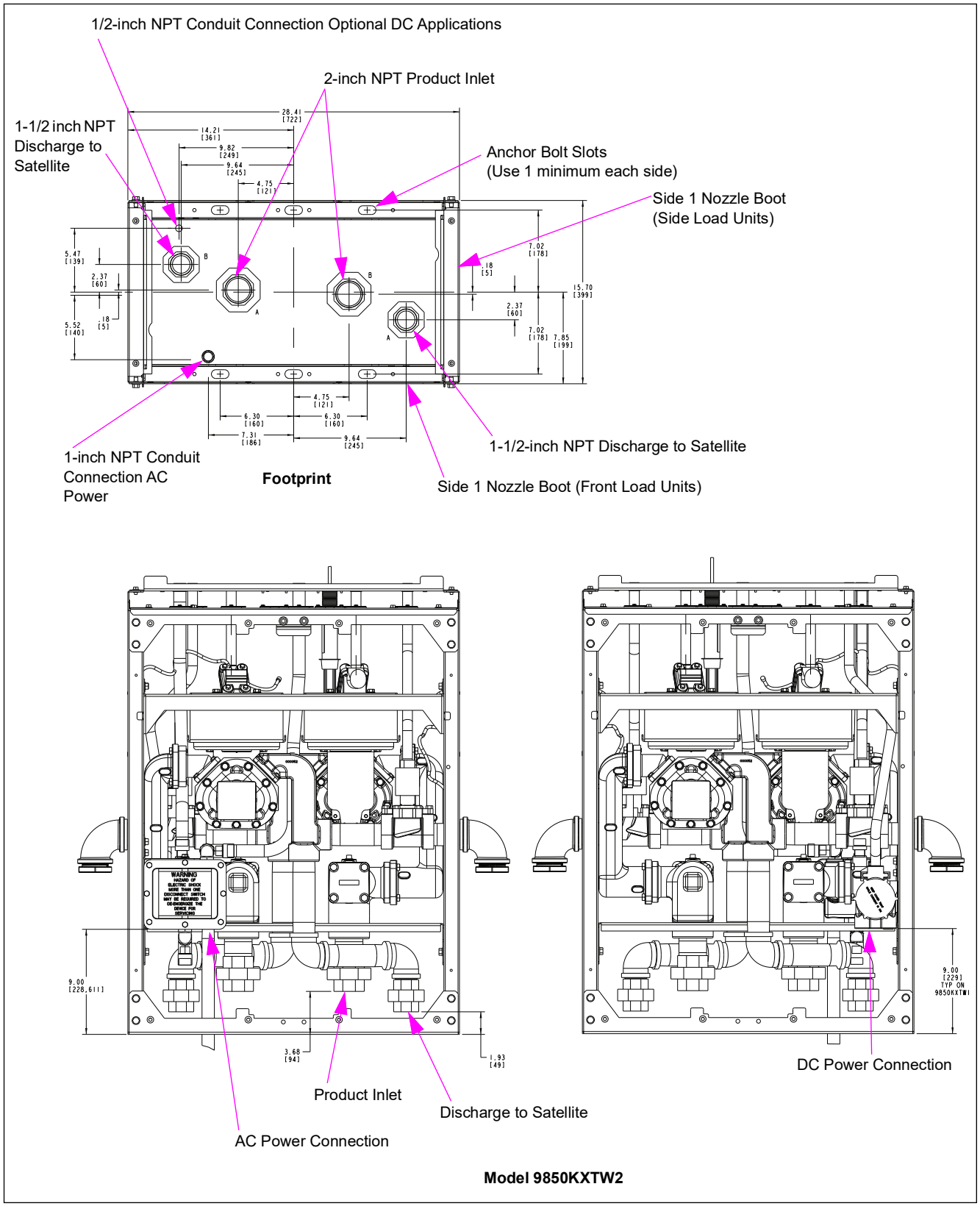

Figure A-18: Model 9850KXTW1 - UHF Dispenser (TWIN 1)

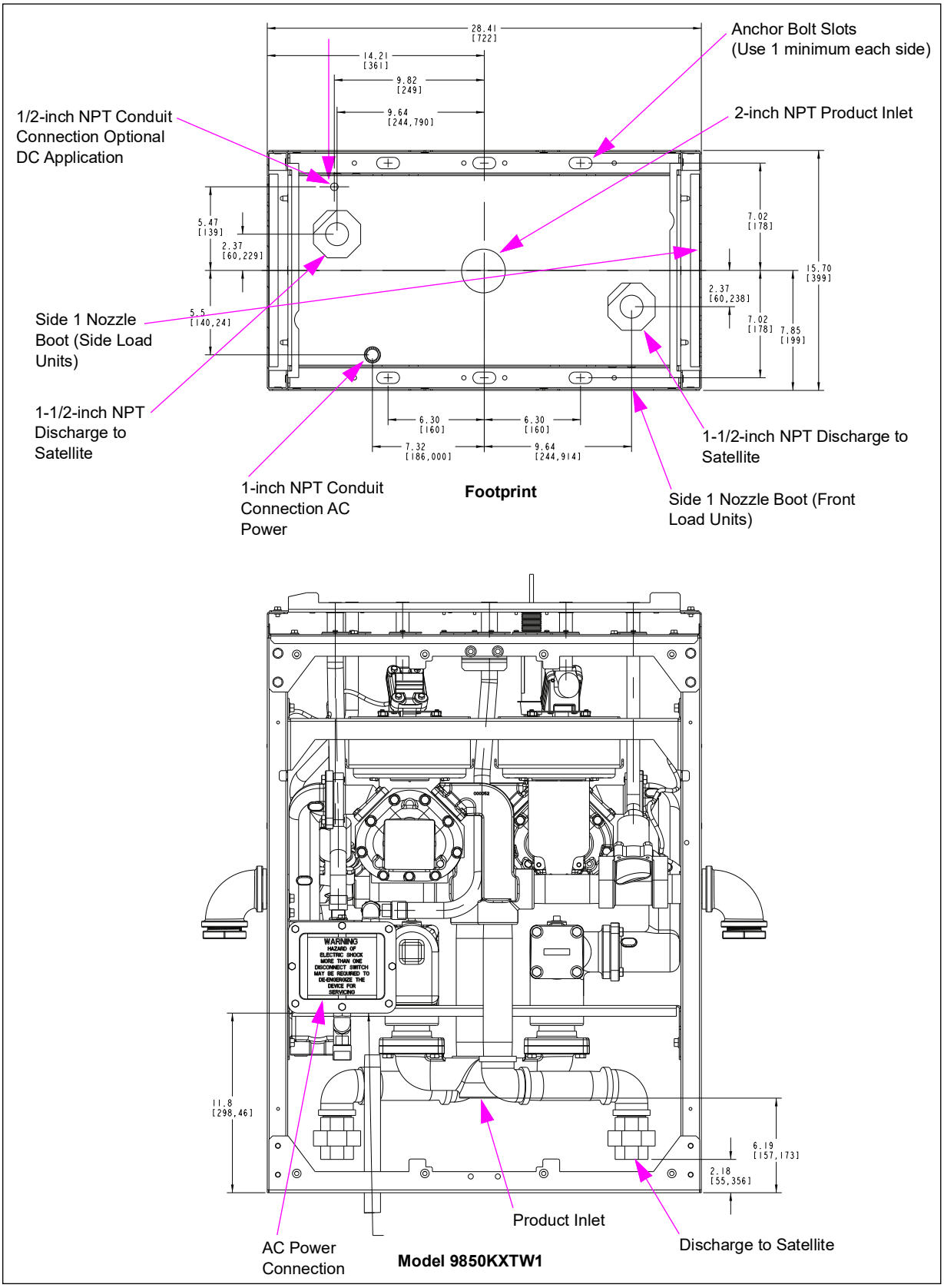

Figure A-19: Model 9872KX, 9872KXTW1 (E85 Dispenser)

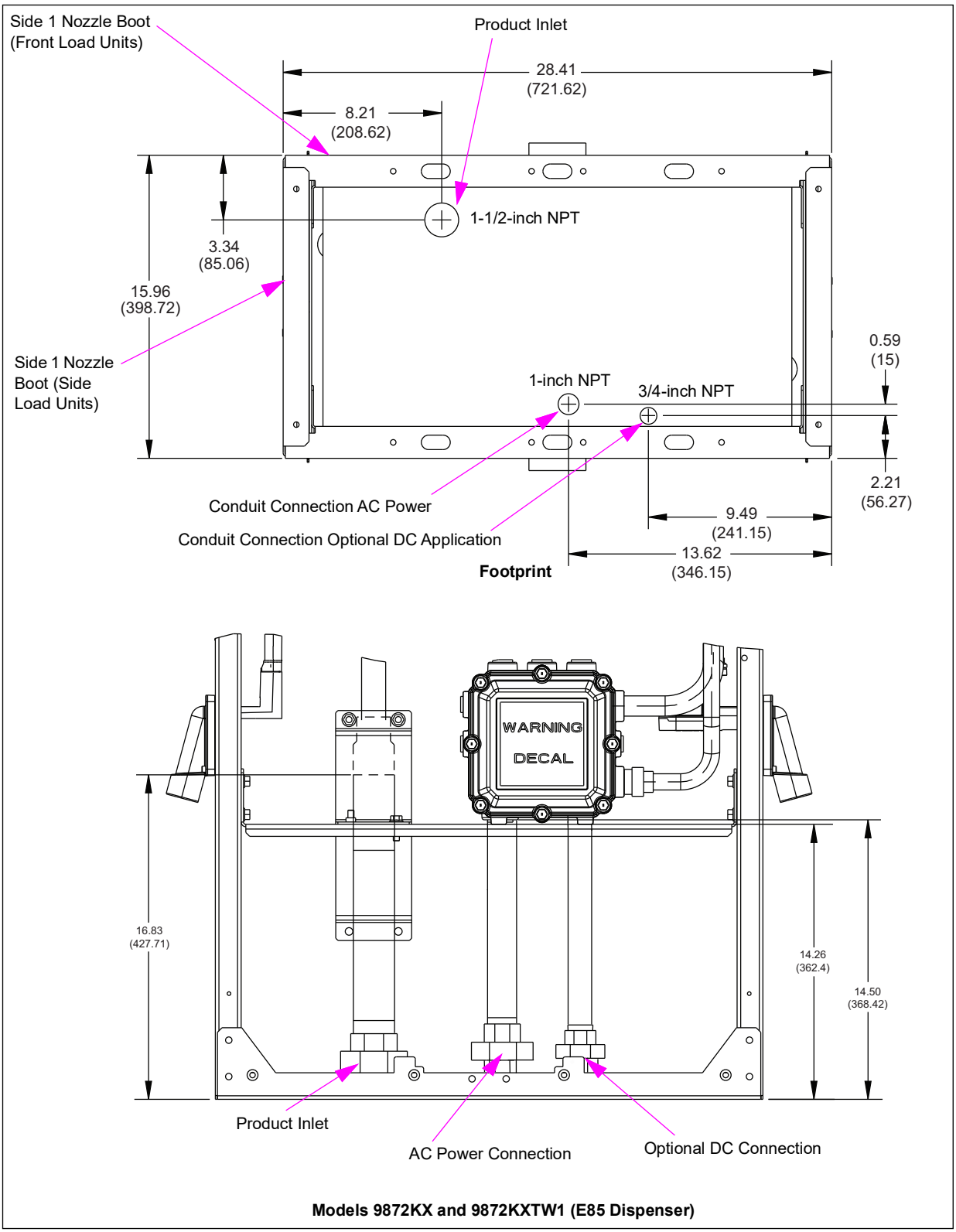

Models 9872KX and 9872KXTW1 (E85 Dispenser)

Figure A-20: Model 9862KX-Z (DEF Cold Weather Dispenser)

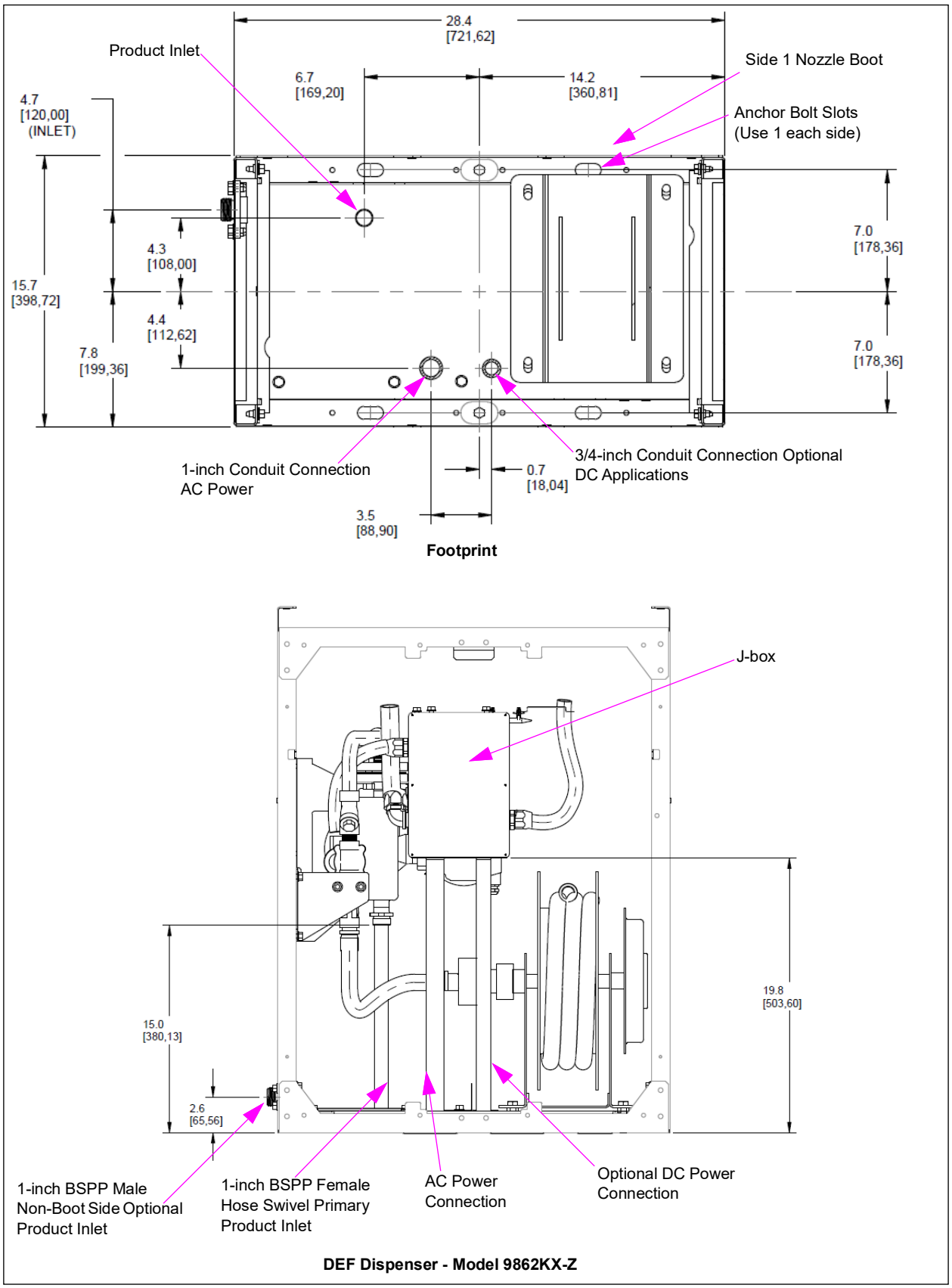

Figure A-21: Warm Weather Unit (9862KX-WW)

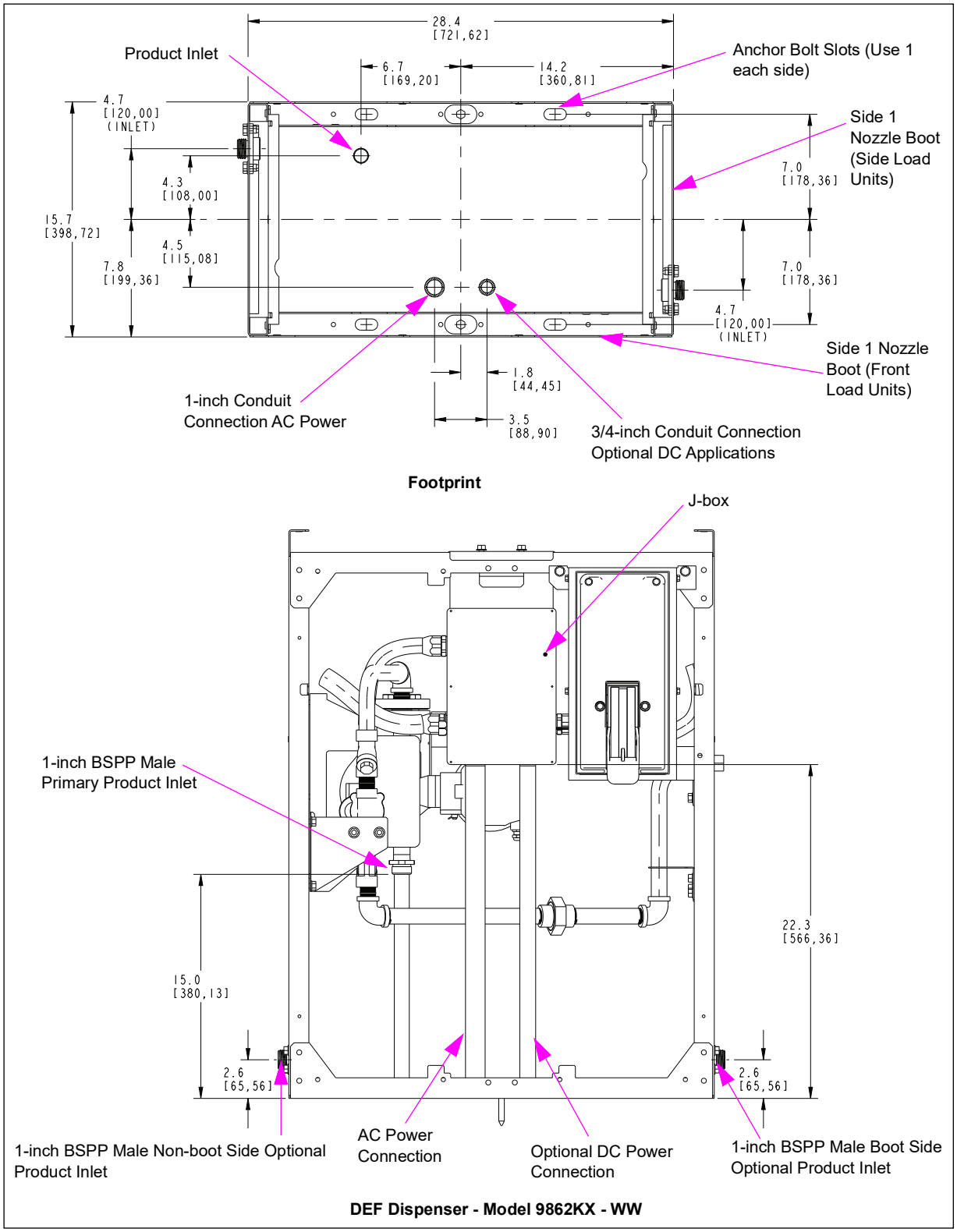

Index

A
Anchor Bolt Slots A-5
AST installations 4-4

C
Changing Fuel Types 6-2
Alternative fuels 6-2
chassis metal 4-5
cold weather DEF 4-2
Combo 1-6
Conduit, electrical 7-3
conduit, electrical 7-3, 7-4, 7-6
conduit, electrical, wire trough 7-3
Conduits 8-1
contaminants 3-2
contractor 7-1
Control/Submersible Feed 4-3

D
DEF 1-3, 1-4, 7-9, 8-1, 8-2
Important Considerations 3-2
direct sunlight 8-2
Discharge 1-2
Dispenser 1-6
drilling 3-1

E
E85 Units 6-1
Important Requirements 6-1
electric, electrical, electricity 7-2, 7-3
electrical 7-2
electrician 7-2
electronic totalizers 8-2
electronic units 7-2
explosion-proof 7-3
External Valve 4-3

F
false triggering 4-5
fast-flow mode 5-3
feed line 4-2
flexible fuel model dispensers 6-3
fluorescent lights 4-6
For New and Existing Pumps and Existing Dispensers With Fuel In Lines 6-23
For New Dispensers 6-22

G
Gasboy CFN series system 4-7
Gasboy Fleet PLUS System 5-1
Grade 1-6
Ground 4-1, 7-2, 7-3, 7-6
ground 7-2, 7-6
Ground Fault Interrupter 4-1

H
Hazardous Locations 3-1

I
Important Safety Information 2-1
isolation relay boxes 7-3

L
LAN/WAN wiring 4-7

M
Master 1-6
Mechanical pump 1-3
metallic parts 3-2
Micro Feed 4-2
Micro Neutral 4-2
micro neutral 4-6
micro/heater feed 4-6
microprocessor 4-2

N
National Electrical Code 4-1
neutral 4-1
Neutral Feed 4-3
non-flammable 3-2
nozzle 9-1

P
parentheses 4-1
pipe 7-8
pipe, plumbing 7-8, 7-9, 7-10
plumb 7-8
plumbing 8-2
Power Connection A-4
Product 1-6
Product Inlet A-4
pulser input 4-6
pump and dispenser installations 7-2
Purging Air from System 6-22

R
remote-controlled packages 1-3
revolution 9-2
rubber gloves 3-2

S
saddle tank 1-6
Satellite 1-6
self-contained models 7-2
share breakers 4-2
shear valve 7-8, 7-10
smoking 3-1
speaker wires 7-3
standard calibration procedures 8-2
Standard Submersible Drive 4-3
STP isolation relays 7-3
Submersible Drive Relay Option 4-4
submersible pump 4-4, 8-1
Submersible Starter Drive 4-4

T
temperature 1-4
TopKAT PLUS 4-2

U
Ultra-Hi units 4-7
Urea 1-6

W
wiring diagrams and installation notes 5-1
Wiring, electrical 7-4

© 2023 GASBOY
7300 West Friendly Avenue · Post Office Box 22087
Greensboro, North Carolina 27410
Phone 1-800-444-5529 · http://www.gasboy.com · Printed in the U.S.A.
MDE-4331T Atlas® Fuel Systems Installation Manual · September 2023