VEEDER-ROOT
SITE PREPARATION AND
INSTALLATION INSTRUCTIONS

Technical Manual
Issued: 6/92
Supersedes: 11/91

ILS-350
UST MONITORING SYSTEM

Manual Number 576013-773

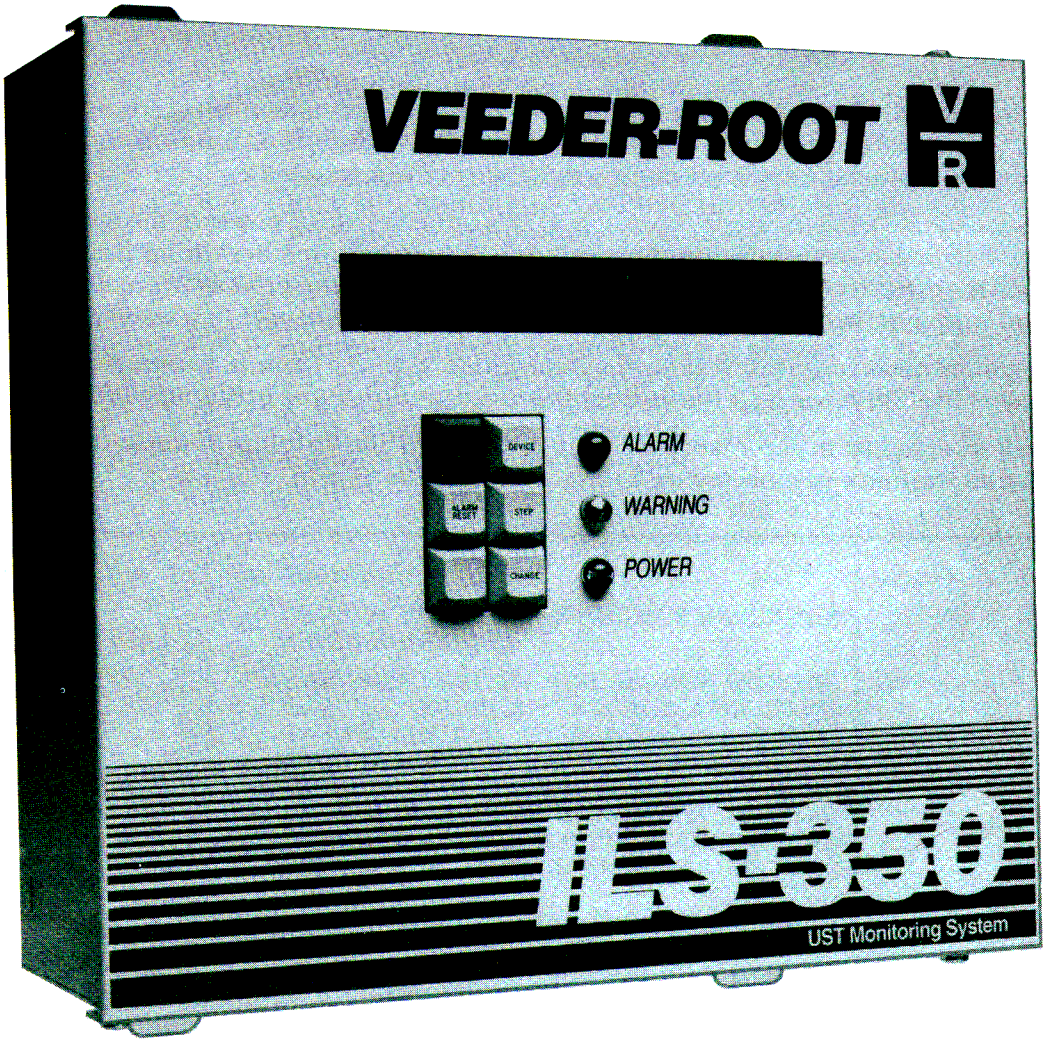

VEEDER-ROOT
Environmental Products

ATTENTION INSTALLER:

READ THIS IMPORTANT SAFETY INFORMATION BEFORE BEGINNING WORK

This product is to be installed and operated near the highly combustible environment of an underground fuel storage tank. It is essential that you carefully read and follow the warnings and instructions in this manual to protect yourself and others from serious injury, explosion or electrical shock.

For safety reasons, we have taken care in the design of this product to limit power in the wiring to sensors and monitoring wells and to keep that wiring physically separated from any other wiring. It is your responsibility to maintain the effectiveness of these safety features by installing this product in accordance with the instructions and warnings that follow. Your failure to do so could create danger to life and property.

Leaking underground tanks can create serious environmental and health hazards. It is your responsibility to install this product in accordance with the instructions and warnings found in this manual.

Failure to install this product in accordance with the instructions and warnings found in this manual will result in voiding all warranties connected with this product (see Section 9).

WARNINGS:

EXPLOSION COULD OCCUR IF OTHER WIRES SHARE CONDUITS OR TROUGHS WITH SENSOR WIRING. CONDUITS AND WIRING TROUGHS FROM SENSORS MUST NOT CONTAIN ANY OTHER WIRES.

IMPROPER SYSTEM OPERATION COULD RESULT IN UNDETECTED POTENTIAL ENVIRONMENTAL AND HEALTH HAZARDS IF THE SENSOR-TO-MONITOR WIRE RUNS EXCEED 1000 FEET. RUNS OVER 1000 FEET ARE NOT UL ACCEPTED FOR THIS APPLICATION. SENSOR-TO-MONITOR WIRE RUNS MUST NOT EXCEED 1000 FEET.

EXPLOSION AND/OR EQUIPMENT DAMAGE COULD OCCUR IF CONDUITS DO NOT ENTER THE MONITOR THROUGH THEIR DESIGNATED PREFORMED KNOCKOUTS.

IN INSTALLATION OF THIS PRODUCT, COMPLY WITH THE NATIONAL ELECTRICAL CODE; FEDERAL, STATE AND LOCAL CODES; AND OTHER APPLICABLE SAFETY CODES.

TO AVOID ELECTRICAL SHOCK WHICH COULD KILL YOU, BE SURE AC POWER TO THE ILS-350 MONITOR IS OFF DURING INSTALLATION OF THE SYSTEM.

CAREFULLY READ THE INSTALLATION INSTRUCTIONS AND WARNINGS FOUND IN THIS MANUAL. FAILURE TO DO SO COULD RESULT IN DEATH, SERIOUS PERSONAL INJURY, PROPERTY LOSS OR EQUIPMENT DAMAGE AND UNDETECTED POTENTIAL ENVIRONMENTAL AND HEALTH HAZARDS.

WARNING:

SUBSTITUTION OF COMPONENTS MAY IMPAIR INTRINSIC SAFETY.

CIRCUITRY WITHIN THE ILS-350 MONITOR BARRIER FORMS AN INTRINSICALLY SAFE, ENERGY-LIMITED SYSTEM. THIS SYSTEM MAKES ILS-350 SENSORS SAFE FOR USE IN A CLASS I, GROUP D HAZARDOUS LOCATION. SENSOR WIRING IS INTRINSICALLY SAFE ONLY WHEN CONNECTED TO VEEDER-ROOT'S ILS-350 MONITOR FORM NUMBER 8450.

TABLE OF CONTENTS

SECTION 1. INTRODUCTION

A. General 1
B. Damage Claims 1
C. Return Shipping 1

SECTION 2. PRODUCT DESCRIPTION

A. Monitor 1
B. Sensors 2

SECTION 3. SITE PREPARATION

A. Interstitial Liquid Sensor Riser Pipe Installation 3
B. Monitor Location Selection 3
C. Power Wiring Conduit Installation 4
D. Sensor Wiring Conduit Installation 5
E. Sensor Junction Box Installation 5
F. Manhole Installation 5
G. Intrinsically Safe Wiring Installation 6
H. Power Wire Installation 6

SECTION 4. ILS-350 MONITOR INSTALLATION

A. Mounting 6
B. General Wiring Practices 8
C. Module/Connector Positions and Labeling 8
D. Power Wiring Connections 10
E. Sensor Wiring Connections 10
F. Relay Output Wiring 11

SECTION 5. INTERSTITIAL LIQUID SENSOR INSTALLATION

A. Equipment Preparation 12
B. Installation of Float Switch — Steel Tanks 12
C. Installation of Float Switch — Fiberglass Tanks 13

SECTION 6. PIPING SUMP SENSOR SWITCH INSTALLATION

A. General 14
B. Installation 14

SECTION 7. VAPOR SENSOR INSTALLATION 15

SECTION 8. GROUNDWATER SENSOR INSTALLATION 16

SECTION 9. WARRANTY CONDITIONS AND LIMITATIONS OF LIABILITY

A. Limitations of Liability 17
B. Inspection 17
C. Limitation of Remedy and Warranty 18
D. Limitation of Damages 18
E. Limitation of Actions 18
F. Collateral Promises 18
G. Interpretation 18

APPENDIX A. WIRING RECORD — INTRINSICALLY SAFE AREA 18

SECTION 1. INTRODUCTION

A. GENERAL.

1. This manual contains the installation instructions for the ILS-350 UST Monitoring System designed and manufactured by the Veeder-Root Company, 125 Powder Forest Drive, P.O. Box 2003, Simsbury, CT 06070-2003.
2. When a vertical bar ▌ appears adjacent to text or illustrations, information has been added or revised in this printing.

B. DAMAGE CLAIMS.

1. Thoroughly examine for any damage all components and units as soon as received.

NOTE: Insist that the carrier's agent verify the inspection and sign the description.

2. Immediately notify the delivering carrier of damage or loss. This notification may be given either in person or by telephone. Written confirmation must be mailed within 48 hours. Railroads and motor carriers are understandably reluctant to make adjustments for damaged merchandise unless inspected and reported promptly.
3. Risk of loss or damage to merchandise remains with the buyer. It is the buyer's responsibility to file a claim with the carrier involved.
4. Immediately advise your Veeder-Root representative, distributor, or Veeder-Root headquarters in Simsbury, CT so that we may assist you.

C. RETURN SHIPPING. Before returning any ILS-350 monitors, sensors or other system components, you must first call Veeder-Root Environmental Products Customer Service at (800) 873-3313 for a Returned Goods Authorization. It will provide complete information on return shipping procedures. Do not return any products without first obtaining a Returned Goods Authorization.

SECTION 2. PRODUCT DESCRIPTION

The ILS-350 UST Monitoring System features a modular design that allows each system to be configured with monitoring, input and output capabilities according to the needs of a particular site.

A. MONITOR

1. **Temperature Ranges.**

   Operating Temperature Range: 32 °F to 113 °F (0 °C to 45 °C).
   Storage Temperature Range: 15 ° to 113 °F (−10 ° to 45 °C).

2. **Monitor Features.**

   The ILS-350 monitor incorporates the following features (see Figure 1, "ILS-350 Front Panel Features"):

   - A two-line, 24-character-per-line Liquid Crystal Display.
   - A 6-key front-panel keyboard with control functions for programming, operating and reporting.
   - Three front-panel lamps indicate power-on, warning and alarm conditions.
   - An internal audible warning and alarm indicator.

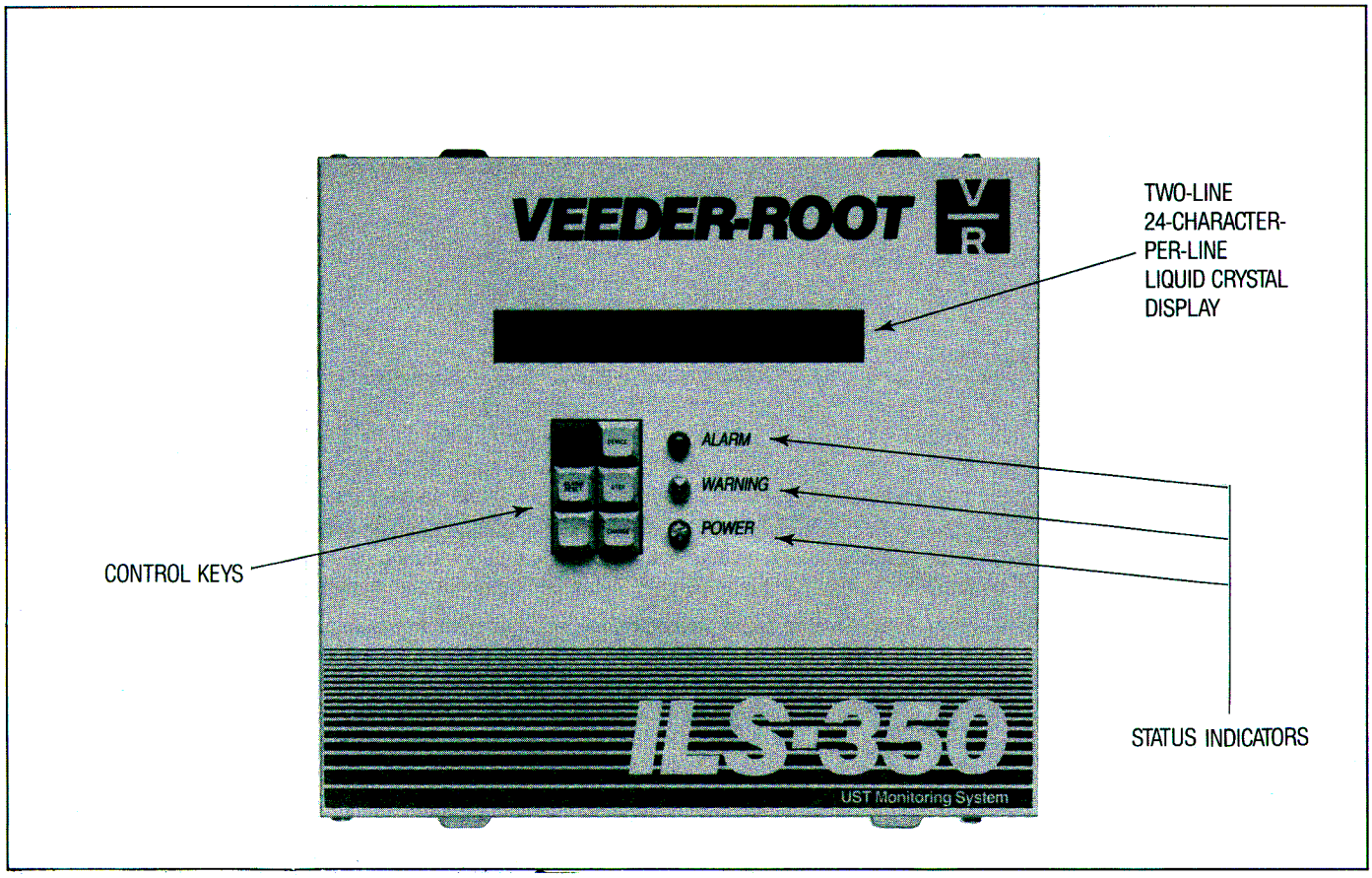

Figure 1. ILS-350 Front Panel Features.

3. **Monitoring Functions.**

Monitoring functions such as interstitial leak sensing and vapor sensing are provided by modular boards that snap into intrinsically-safe expansion slots (see Figure 2, "ILS-350 Interface Module Area"). Up to four modular boards, two- or three-wire designs, can be snapped into the instrinsically safe area of the monitor. Each module can accommodate up to four sensors.

4. **Output Functions.**

Output Relays provide both normally open and normally closed contacts. They are able to control external alarm devices when an alarm condition is sensed by any of the sensors installed in the ILS-350. Relays may also be used to control sumps. (See Figure 2, "ILS-350 Interface Module Area".) Five relays, including one external timed relay, are available in the power area of the monitor.

B. SENSORS.

An ILS-350 system can incorporate sensors that detect liquids in interstitial spaces of double-wall tanks, piping sumps, as well as sensors which can detect hydrocarbon vapors in dry monitoring wells, and hydrocarbons floating on top of the water table in wet monitoring wells.

Interstitial and piping sump sensors are two-wire devices, while vapor and groundwater sensors are three-wire devices. The installation and wiring procedures for these sensors are described in this manual.

C. REFERENCE CARDS.

For your convenience, three reference cards are provided with a plastic sleeve to be mounted on the front of your ILS-350 console.

- **Sensor Location.** Fill in the sensor type and location, and the contractor in case of an alarm condition.
- **Operating Procedures Chart.** Use as quick reference for operating procedures if operating manual is not available.
- **Test Schedule.** Record all system tests and by whom they were done.

12292R

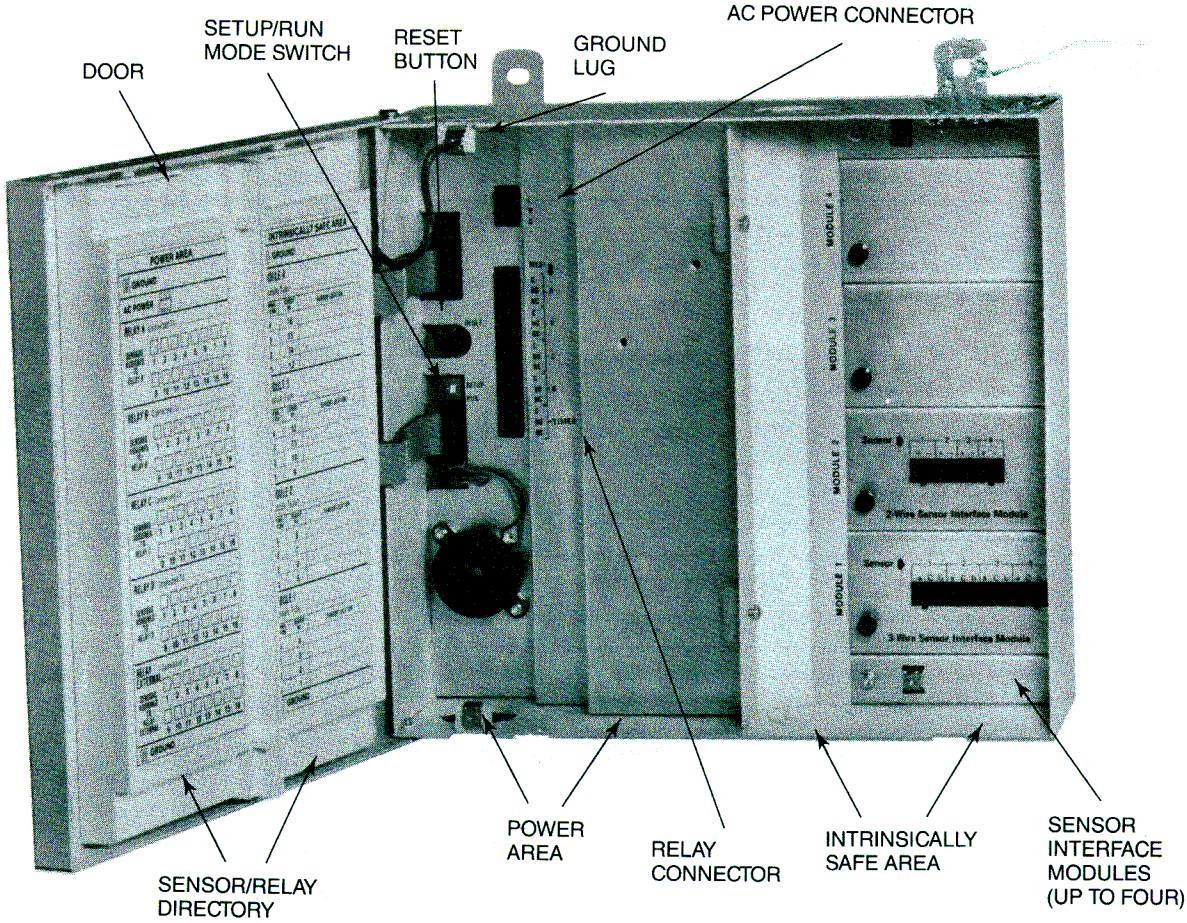

Figure 2. ILS-350 Interface Module Area.

SECTION 3. SITE PREPARATION

WARNING: IN INSTALLATION OF THIS PRODUCT, COMPLY WITH THE NATIONAL ELECTRICAL CODE; FEDERAL, STATE AND LOCAL CODES; AND OTHER APPLICABLE SAFETY CODES.

WARNING: TO PROTECT YOURSELF AND OTHERS FROM BEING STRUCK BY VEHICLES DURING WORK, BLOCK OFF YOUR WORK AREA DURING INSTALLATION OR SERVICE.

FAILURE TO COMPLY WITH THESE WARNINGS COULD RESULT IN DEATH, SERIOUS PERSONAL INJURY, PROPERTY LOSS, AND EQUIPMENT DAMAGE.

A. INTERSTITIAL LIQUID SENSOR RISER PIPE INSTALLATION.

(See Figure 3, "Liquid Sensor Installation Requirements — Steel Tanks," and Figure 4, "Liquid Sensor Installation Requirements — Fiberglass Tanks").

NOTE: If the tank is at a tilt, install the sensor at the lower end of the tank.

1. Standard procedures for installing a fill pipe can be used. Instructions are based on a 2-inch riser pipe.
2. If the tank is buried, excavate the portion that contains the riser hole.
3. Remove the bung from the hole and install the riser pipe.

NOTE: The top of the riser pipe must have a 2 × 14 NPT pipe thread or must accept a standard schedule 40 2 × 14 NPT male adaptor ring (supplied in Veeder-Root Kit Number 312020-928).

Veeder-Root Riser Cap Kit No. 312020-928 can be used with either a threaded or unthreaded riser pipe.

In addition, make sure there will be enough clearance between the top of the installed riser cap and manhole cover to allow room for the two-wire sensor cable to protrude from the cap.

4. Install a standard adaptor ring and/or pipe cap on the riser pipe.

NOTE: If the threaded adaptor ring is used, install with the proper adhesive (i.e., TBC cement). Use thread sealer, **NOT ADHESIVE,** when installing the riser cap.

B. MONITOR LOCATION SELECTION.

WARNING: IMPROPER SYSTEM OPERATION COULD RESULT IN UNDETECTED POTENTIAL ENVIRONMENTAL AND HEALTH HAZARDS IF THE SENSOR-TO-MONITOR WIRE RUNS EXCEED 1000 FEET. RUNS OVER 1000 FEET ARE NOT UL ACCEPTED FOR THIS APPLICATION. SENSOR-TO-MONITOR WIRES MUST NOT EXCEED 1000 FEET.

WARNING: EXPLOSION COULD OCCUR IF THE MONITOR IS INSTALLED IN A VOLATILE, COMBUSTIBLE OR EXPLOSIVE (CLASS I, DIVISION I OR DIVISION II) ATMOSPHERE. DO NOT INSTALL THE MONITOR IN A VOLATILE, COMBUSTIBLE OR EXPLOSIVE ATMOSPHERE.

FAILURE TO COMPLY WITH THESE WARNINGS COULD RESULT IN DEATH, SERIOUS PERSONAL INJURY, PROPERTY LOSS, AND EQUIPMENT DAMAGE.

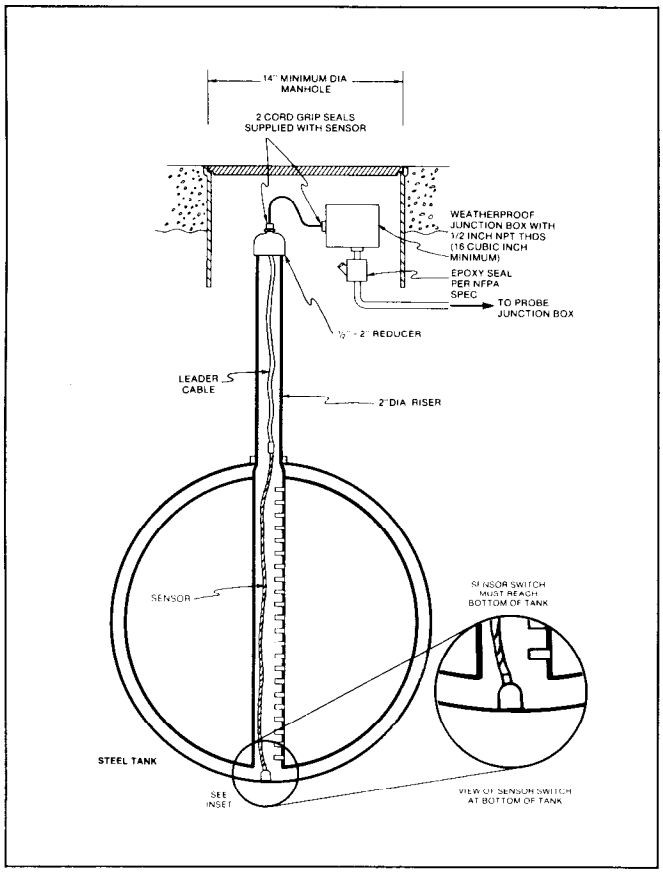

Figure 3. Liquid Sensor Installation Requirements — Steel Tanks.

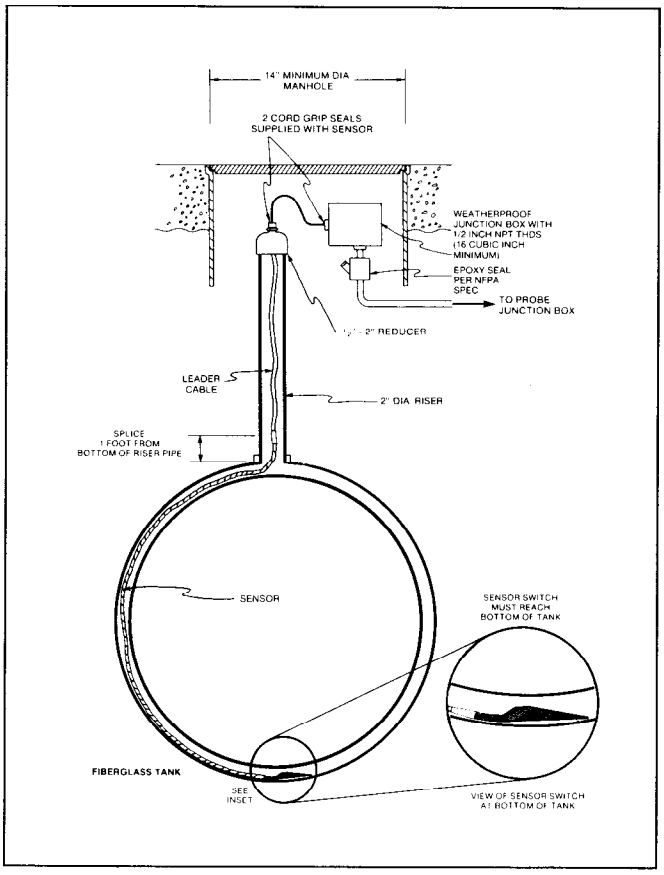

Figure 4. Liquid Sensor Installation Requirements — Fiberglass Tanks.

1. Select a mounting location on the inside wall of any enclosed building.
   a. Be sure the console will be protected from severe vibration, extremes in temperature and humidity, rain, and other conditions that could harm the equipment.
   b. Consider the ease of routing power wiring conduit and the sensor conduit to the monitor.
   c. Be sure the mounting surface material is strong enough to support the monitor's weight.

C. POWER WIRING CONDUIT INSTALLATION.

To the installer: Read and carefully adhere to the instructions in the following warnings during conduit installation!

WARNING: EXPLOSION COULD OCCUR IF OTHER WIRES SHARE CONDUITS OR TROUGHS WITH SENSOR WIRING. CONDUITS AND WIRING TROUGHS FROM ILS-350 SENSORS MUST NOT CONTAIN ANY OTHER WIRES.

WARNING: EXPLOSION AND/OR EQUIPMENT DAMAGE COULD OCCUR IF CONDUITS DO NOT ENTER THE ILS-350 MONITOR THROUGH THEIR DESIGNATED PREFORMED KNOCKOUTS.

FAILURE TO COMPLY WITH THESE WARNINGS COULD RESULT IN DEATH, SERIOUS PERSONAL INJURY, PROPERTY LOSS AND EQUIPMENT DAMAGE.

1. Install rigid metal conduit (¾ ", 1 " or 1¼ " I.P.S.) for monitor power from the power panel to the monitor location. Power wiring must enter the monitor through a designated knockout (see Figure 5, "Monitor Dimensions and Mounting Requirements").

   Power wiring must be installed in conduit separately from sensor wiring.

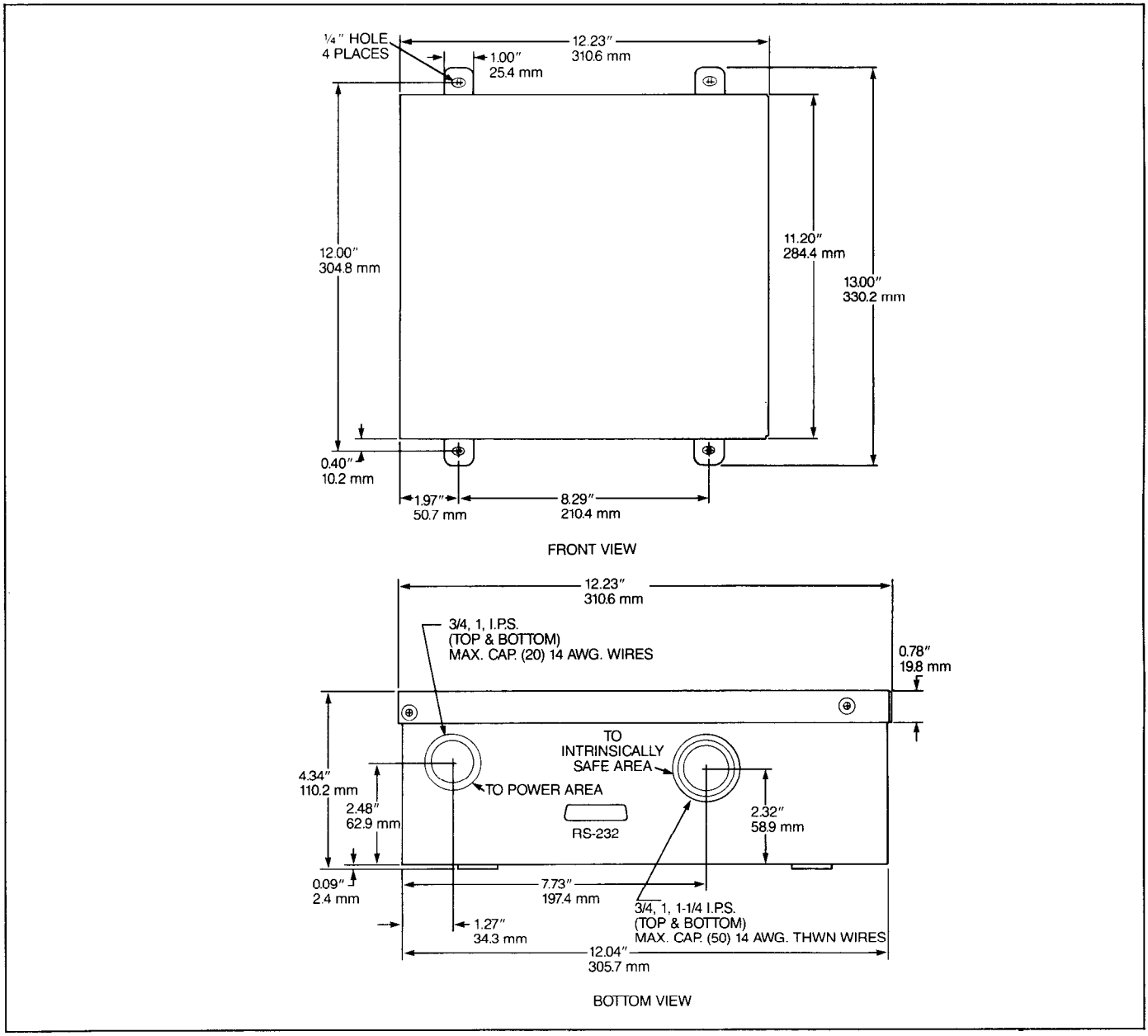

Figure 5. Monitor Dimensions and Mounting Requirements.

D. SENSOR WIRING CONDUIT INSTALLATION.

To the installer: Read and carefully adhere to the instructions in the following warnings during conduit installation!

WARNING: EXPLOSION COULD OCCUR IF OTHER WIRES SHARE CONDUITS OR TROUGHS WITH SENSOR WIRING. CONDUITS AND WIRING TROUGHS FROM ILS-350 SENSORS MUST NOT CONTAIN ANY OTHER WIRES.

WARNING: EXPLOSION AND/OR EQUIPMENT DAMAGE COULD OCCUR IF CONDUITS DO NOT ENTER THE ILS-350 MONITOR THROUGH THEIR DESIGNATED PREFORMED KNOCKOUTS.

FAILURE TO COMPLY WITH THESE WARNINGS COULD RESULT IN DEATH, SERIOUS PERSONAL INJURY, PROPERTY LOSS AND EQUIPMENT DAMAGE.

1. Wiring between the ILS-350 monitor, and the sensors limits the electrical power to the sensors so that there is insufficient energy to ignite fuel. To maintain this safety feature, install ILS-350 sensor wires in separate conduits from all other wiring.

NOTE: Wiring from separate ILS sensors may be run in the same conduits or troughs providing they are powered by the same monitor.

CAUTION: IMPROPER SYSTEM OPERATION WILL RESULT IF SENSOR WIRING FROM SEPARATE ILS-350 MONITORS SHARE THE SAME CONDUIT. DO NOT RUN SENSOR WIRING FROM SEPARATE ILS-350 SYSTEMS IN THE SAME CONDUIT.

Never run any sensor wires in the same conduit or trough as power wires!

2. Run conduit from all sensor locations to the ILS-350 monitor location. The conduit layout should be designed to best suit the requirements of the site, and must conform to Federal, state and local codes.

   Knockouts for ¾ ″, 1 ″ or 1¼ ″ I.P.S. conduit are provided in the intrinsically-safe area of the monitor. You must conform to the National Electrical Code and state and local codes and consider the number of wires entering the monitor when deciding on the size and number of conduits required for sensor wiring.

3. The conduit must be properly sealed in accordance with the National Electrical Code (NFPA 70) and the Automotive and Marine Service State Code (NFPA 30A) since they pass from a Class I, Division I or Division II area into a nonhazardous area.

E. SENSOR JUNCTION BOX INSTALLATION.

1. Install a weatherproof electrical junction box with gasketed cover on the end of each sensor conduit run at the manhole or monitoring well location. Gasketing or sealing compound must be used at each entry to the junction box to ensure a waterproof junction. The interior of each junction box must be a minimum of 16 cubic inches. Use one of the approved units shown in the following listing or an equivalent unit.

Typical Sensor Junction Boxes:

Manufacturer: Appleton Electric Co.
1701 W. Wellington Avenue
Chicago, IL 60657

Tel: (312) 327-7200

Description	Catalog Number	Quantity
Junction Box	JBDX-75	1
Cover, Junction Box	JBK-B	1
Gasket, Junction Box	JB-GK-V	1

Manufacturer: Crouse-Hinds Co.
Syracuse, NY 13221

Tel: (315) 477-7000

Description	Catalog Number	Quantity
Junction Box	GRFX-139	1
Cover, Junction Box	GRF-10	1
Gasket, Junction Box	GASK-643	1

F. MANHOLE INSTALLATION.

NOTE: Ensure that there is a sufficient amount of gravel under each manhole for proper drainage.

At each sensor location, install a 14-inch minimum diameter approved manhole according to the manufacturer's instructions. Offset the sensor riser pipes within the manholes for ease of junction box installation and wiring. Leave enough space between the junction box and manhole liner so that the junction box can be removed if necessary.

G. INTRINSICALLY SAFE WIRING INSTALLATION.

(See Figure 6, "ILS-350 System Wiring Diagram".)

To the installer: Read and carefully adhere to the instructions in the following warnings during intrinsically safe-wire (field wire) installation!

WARNING: IMPROPER SYSTEM OPERATION COULD RESULT IN UNDETECTED POTENTIAL ENVIRONMENTAL AND HEALTH HAZARDS IF THE SENSOR-TO-MONITOR WIRE RUNS EXCEED 1000 FEET. RUNS OVER 1000 FEET ARE NOT UL ACCEPTED FOR THIS APPLICATION. SENSOR-TO-MONITOR WIRES MUST NOT EXCEED 1000 FEET.

WARNING: EXPLOSION COULD OCCUR IF OTHER WIRES SHARE CONDUITS OR TROUGHS WITH SENSOR WIRING. CONDUITS AND WIRING TROUGHS FROM ILS-350 SENSORS MUST NOT CONTAIN ANY OTHER WIRES.

FAILURE TO COMPLY WITH THESE WARNINGS COULD RESULT IN DEATH, SERIOUS PERSONAL INJURY, PROPERTY LOSS AND EQUIPMENT DAMAGE.

All wires must be of a type designed for use in the presence of gasoline and oil, and must be between AWG 18 and AWG 14. The conduit must be properly sealed in accordance with the National Electrical Code (NFPA 70) and the Automotive and Marine Service Station Code (NFPA 30A) since they pass from a Class I, Division I or Division II area into a non-hazardous area.

CAUTION: IT IS CRITICAL THAT YOU IDENTIFY AND MAINTAIN THE RELATIONSHIP OF SENSOR LOCATIONS AND THEIR WIRES TO THEIR POSITIONS ON THE SENSOR CONNECTORS. FAILURE TO DO SO COULD RESULT IN THE IMPROPER IDENTIFICATION OF A LEAK LOCATION OR LEAK TYPE. APPENDIX A PROVIDES A FORM TO RECORD THE COLOR CODING OR LABELING METHOD USED TO IDENTIFY THE WIRING SCHEME.

1. **Two-Wire Interstitial and Sump Sensor Wiring.**

   Pull two conductors of color-coded THWN AWG 14-18 stranded copper wire between the ILS-350 monitor and the junction box at each sensor location.

   Since the wires for multiple sensors may enter the ILS-350 monitor through a single conduit, be sure to use a different color code for each wire or individually mark each wire!

2. **Three-Wire Vapor and Groundwater Sensor Wiring.**

   Pull three conductors of color-coded, THWN AWG 14-18 stranded copper wire between the ILS-350 monitor and the junction box at each monitoring well location.

   Since the wires for multiple sensors may enter the ILS-350 monitor through a single conduit, be sure to use a different color code for each wire or individually mark each wire!

H. POWER WIRE INSTALLATION.

(See Figure 6, "ILS-350 System Wiring Diagram.)

Pull three (3) #14 AWG (or larger) color-coded wires for line, neutral and chassis ground, **and pull one (1) #12 AWG wire for barrier ground** between the power panel and the ILS-350 monitor.

CAUTION: DO NOT CONNECT THE POWER SUPPLY WIRES TO A LIVE CIRCUIT.

SECTION 4. ILS-350 MONITOR INSTALLATION

A. MOUNTING.

1. Locate and mark mounting points at the location selected in Section 3B. (See Figure 5, "Monitor Dimensions and Mounting Requirements").

   BE SURE TO CONSIDER THE WEIGHT OF THE CONSOLE AND THE MOUNTING SURFACE MATERIAL WHEN SELECTING A MOUNTING FASTENER.

2. If the fastening device requires an insert in the mounting surface, drill the appropriate holes and install the inserts. Up to ¼" screws or bolts may be used.

3. Mount the monitor to the mounting surface through the holes in the four mounting flanges located on top and bottom of the monitor.

4. Connect the power wiring conduit and sensor wiring conduit(s) in the appropriate knockouts.

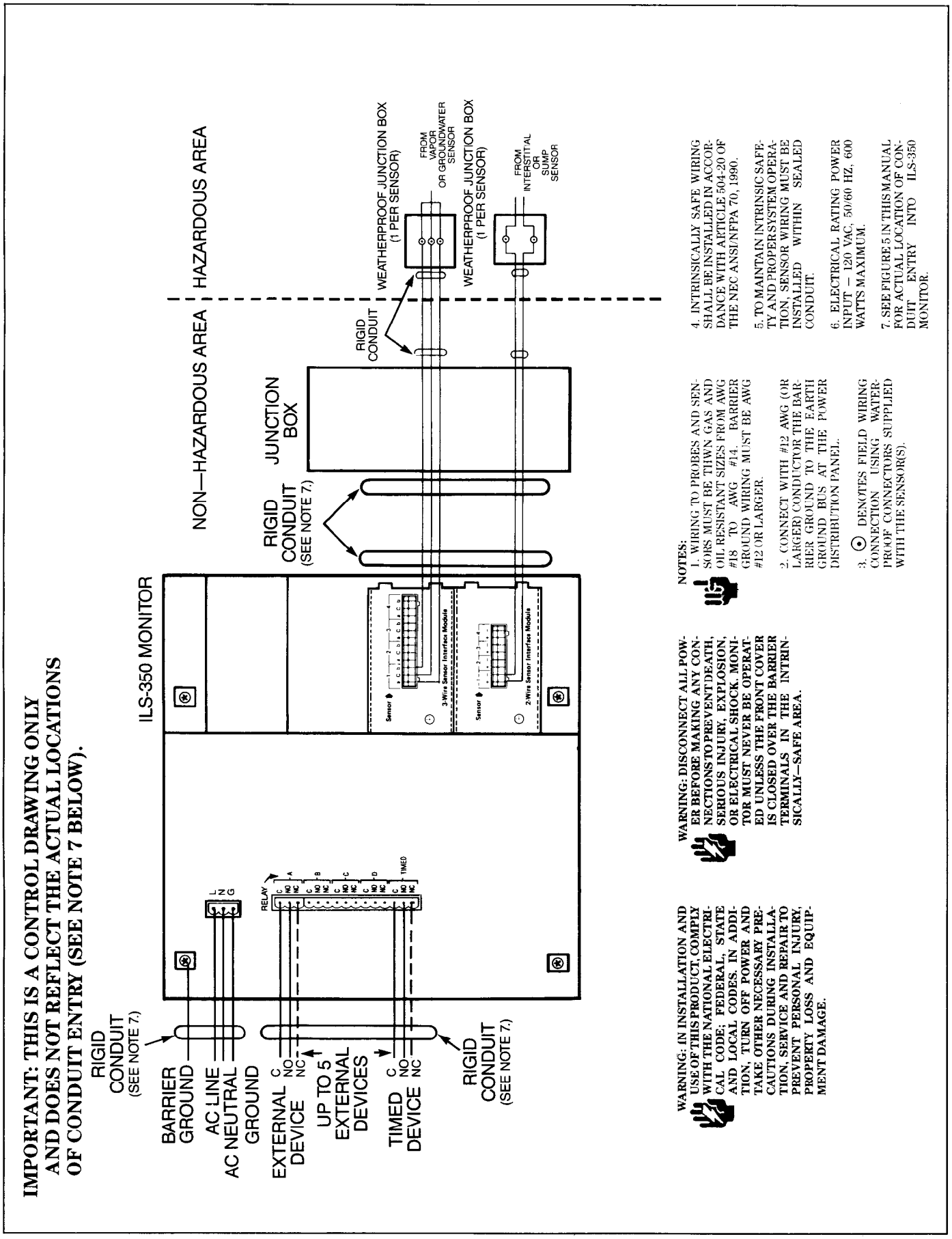

Figure 6. ILS-350 System Wiring Diagram.

B. GENERAL WIRING PRACTICES.

Wiring the ILS-350 is not complicated, however, it is essential for your safety and for proper operation of the system that you observe all warning statements and carefully follow the instructions in this manual.

Here are a few general guidelines to help insure a successful installation.

1. Be sure all wires entering the ILS-350 monitor are color-coded or marked to identify their source.
2. Each module comes with a terminal connector. **Do not remove the connector from the module during wiring.** Terminal identifications appear only on the module bracket. Removing the connector for wiring increases the risk of connecting wires to the wrong terminals.
3. Record all required wiring information on the circuit directory located on the back of the right-hand door.

TO THE INSTALLER! READ AND UNDERSTAND THIS INFORMATION

C. MODULE/CONNECTOR POSITIONS AND LABELING.

Most ILS-350 systems will be shipped with modules installed as ordered. If additional features are added at a later date, modules will be field installed.

In all cases, the position of the modules, their respective connectors and the sensors wired to the connectors must be recorded to prevent improper replacement during installation or service. A circuit directory is adhered to the back of the right-hand door for this purpose.

During programming, sensors wired to each module are identified and stored in memory. If a connector is removed and reinstalled on a different module or if an entire module with its connector is removed and reinstalled in a different module slot, the system will not properly recognize the data being received.

1. **Module Position.**
   a. Record on the circuit directory the type of module in each slot location (two-wire or three-wire).
   b. Once a particular **type** of module has been installed in a slot, the system will always look for that **type** of module in that slot. No other **type** of module may be installed in that slot without reprogramming the system.
   c. If a system contains multiple modules of a single type, they may be swapped between their respective slot locations, however, **THE CONNECTORS MUST REMAIN WITH THEIR ORIGINAL LOCATIONS, NOT WITH THE ORIGINAL MODULES.**
2. **Connector Position.**
   a. **Identify all connectors according to their slot location.**
   b. Once a sensor has been wired to certain terminals on a connector and the system has been programmed, the wires from that sensor may not be relocated to other terminals without reprogramming the system.
   c. Once sensors have been wired to a connector on a module and the module and sensors have been programmed to a particular module slot, the connector **cannot** be moved to another module in another slot unless the system is reprogrammed.
3. **Circuit Directory.** A circuit directory (see Figure 7, "Circuit Directory — Example") appears inside the front-panel door. It should be filled out by the installer as the module connectors are being wired.

   The following information should be recorded for each slot:

   a. **Module Type:** Record what type of module has been installed in each slot, i.e. two- or three-wire.
   b. **Sensor Location:** Record the physical location or type of sensor wired to each position on the connector in that slot.
   c. **Relay Connections:** Check the appropriate box in the Power Area for the Relay to which each sensor is assigned.

In the example shown in Figure 7, Terminals 1 and 2 of Module 1 (a two-wire module in this case) are connected to sensors in Tank 1. Sensor No. 2 is a sump sensor, which has been assigned to Relay B, and Relay Timed (which is connected to a timed alarm).

Positions on each module are numbered and each terminal is identified. Four spaces for each slot have been provided on the circuit directory.

Notice the terminal positions (see Figure 7). The sensors are recognized by the system in ascending order. The sensor connected to the first position on the first module will be Sensor No. 1. The sensor connected to the last position on the fourth module would be Sensor No. 16.

POWER AREA

GROUND

AC POWER [L N G]

RELAY A Connected To: Sump Pump

SENSORS ASSIGNED TO RELAY A

1	2	3	4	5	6	7	8

9	10	11	12	13	14	15	16

RELAY B Connected To: _____

SENSORS ASSIGNED TO RELAY B

1	2	3	4	5	6	7	8

9	10	11	12	13	14	15	16

RELAY C Connected To: _____

SENSORS ASSIGNED TO RELAY C

1	2	3	4	5	6	7	8

9	10	11	12	13	14	15	16

RELAY D Connected To: _____

SENSORS ASSIGNED TO RELAY D

1	2	3	4	5	6	7	8

9	10	11	12	13	14	15	16

RELAY EXTERNAL Connected To: External Alarm

SENSORS ASSIGNED TO RELAY TIMED

1	2	3	4	5	6	7	8

9	10	11	12	13	14	15	16

GROUND

INTRINSICALLY SAFE AREA

GROUND

MODULE 4

Module Type: _____

TERMINAL POSITION	SENSOR NO.	SENSOR LOCATION
4	16	
3	15	
2	14	
1	13	

MODULE 3

Module Type: _____

TERMINAL POSITION	SENSOR NO.	SENSOR LOCATION
4	12	
3	11	
2	10	
1	9	

MODULE 2

Module Type: Three-Wire

TERMINAL POSITION	SENSOR NO.	SENSOR LOCATION
4	8	
3	7	
2	6	
1	5	Vapor-NW Corner

MODULE 1

Module Type: Two-Wire

TERMINAL POSITION	SENSOR NO.	SENSOR LOCATION
4	4	
3	3	
2	2	Sump-Tank 1
1	1	Interstitial-Tank 1

GROUND

Figure 7. Circuit Directory Example

D. POWER WIRING CONNECTIONS.

WARNING: IN INSTALLATION OF THIS PRODUCT, COMPLY WITH THE NATIONAL ELECTRICAL CODE; FEDERAL, STATE, AND LOCAL CODES; AND ANY OTHER APPLICABLE SAFETY CODES. IN ADDITION, TAKE NECESSARY PRECAUTIONS DURING INSTALLATION, SERVICE AND REPAIR TO PREVENT PERSONAL INJURY, PROPERTY LOSS AND EQUIPMENT DAMAGE.

WARNING: BE SURE POWER TO THE ILS-350 CIRCUIT IS TURNED OFF BEFORE CONNECTING POWER WIRING. FAILURE TO DO SO COULD RESULT IN DEATH, SERIOUS PERSONAL INJURY, PROPERTY LOSS AND EQUIPMENT DAMAGE.

Power Supply Rating:

Input Power: (L, N, G); 120 VAC, 50/60 Hz, 100W Max.

Output Power: Alarm Relay Contacts, resistive load — 120 VAC, 2A Max; or, 24 VDC, 2A Max.

1. Connect a # 12 AWG (or larger) barrier ground conductor from the ground lug closest to the conduit entry to the earth ground bus on the power panel being used to supply AC line voltage to the ILS-350 monitor (see Figure 8, "Power Wiring Diagram").

NOTE: If connecting to a subpanel, be sure there is an earth ground connection between the subpanel and the main power panel in accordance with the National Electrical Code.

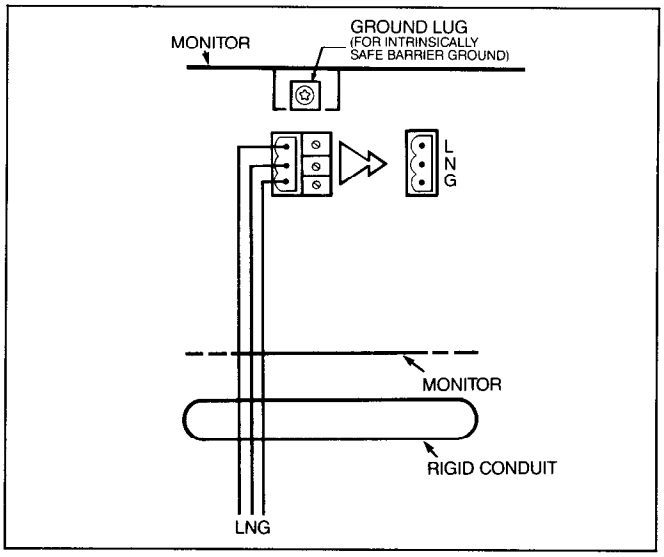

Figure 8. Power Wiring Diagram.

2. Connect the power wires (L and N) and the ground wire (G) to the proper terminals in the AC connector (see Figure 6).
3. Connect the chassis ground wire from the ground lug closest to the conduit entry in the monitor to the earth ground bus on the power panel being used to supply AC line voltage to the ILS-350 monitor (see Figure 8, "Power Wiring Diagram").
4. Connect the power supply wires in the power panel to a separate dedicated circuit.
5. Check to be sure that the electrical resistance between the monitor ground terminal and a known good earth ground is less than 1Ω.

E. SENSOR WIRING CONNECTIONS.

WARNING: IN INSTALLATION OF THIS PRODUCT, COMPLY WITH THE NATIONAL ELECTRICAL CODE; FEDERAL, STATE, AND LOCAL CODES; AND ANY OTHER APPLICABLE SAFETY CODES. IN ADDITION, TAKE NECESSARY PRECAUTIONS DURING INSTALLATION, SERVICE AND REPAIR TO PREVENT PERSONAL INJURY, PROPERTY LOSS AND EQUIPMENT DAMAGE.

WARNING: BE SURE AC POWER TO THE SYSTEM IS OFF BEFORE OPENING THE FRONT-PANEL COVER AND CONNECTING SENSOR WIRES. IF HIGH VOLTAGE IS SHORTED ACROSS ANY BARRIER TERMINAL, EXPLOSION AND FIRE COULD RESULT.

Connectors are supplied with each sensor module. They provide screw terminations for each sensor.

CAUTION: ONCE SENSORS HAVE BEEN CONNECTED AND THE SYSTEM HAS BEEN STARTED AND PROGRAMMED, MODULE POSITIONS, CONNECTOR POSITIONS AND WIRE POSITIONS CANNOT BE CHANGED WITHOUT REPROGRAMMING THE SYSTEM!

IMPROPER SYSTEM OPERATION WILL RESULT IF ANY ONE OF THESE POSITIONS IS CHANGED WITHOUT REPROGRAMMING.

Be sure to accurately record on the circuit directory the type of module, and the location of each device wired to the connector.

1. **Two-Wire Sensors.**

   Connect the two color-coded or marked wires from each sensor to the appropriate terminals in the sensor module connectors (Figure 9, "Two-Wire Sensor Interface Module Wiring Diagram").

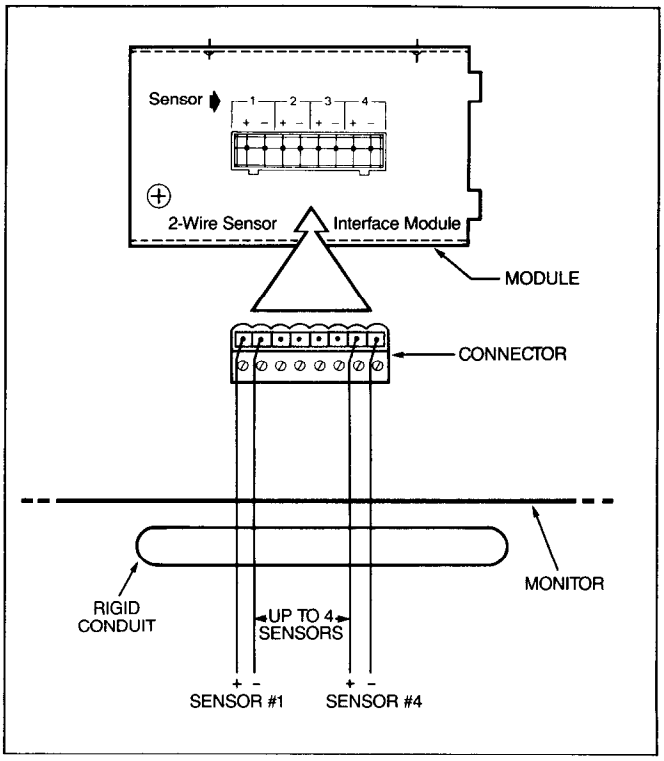

Figure 9. Two-Wire Sensor Interface Module Wiring Diagram.

2. **Three-Wire Groundwater and Vapor Sensors.**

Connect the three color-coded or marked wires from each sensor to the appropriate terminals in the module connectors (see Figure 10, "Three-Wire Sensor Interface Module Wiring Diagram"). **Be sure to maintain proper polarity between the groundwater and vapor sensor wires and their respective module connector terminations.**

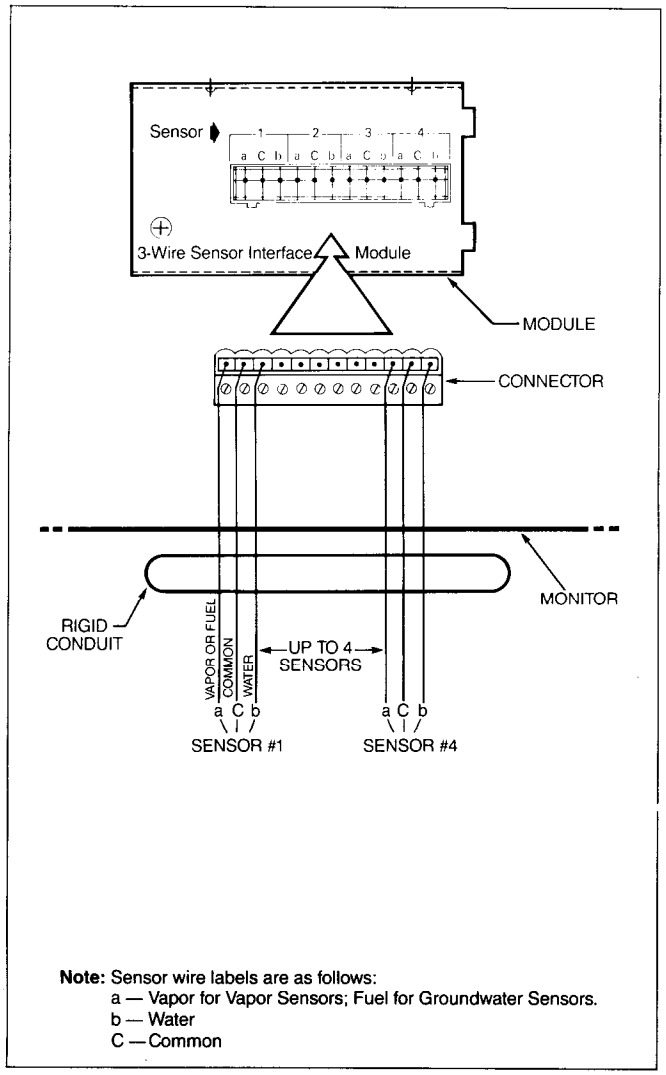

Figure 10. Three-Wire Sensor Interface Module Wiring Diagram.

F. RELAY OUTPUT WIRING.

The ILS-350 Relay Output incorporates five Form-C relay outputs, including one external timed relay. These relays may be connected to external systems or devices that do not draw more than 2A.

NOTE: The following relay operation should be considered when wiring the output relays. All output relays (A through Timed) are energized during normal operation. If an alarm condition on an assigned sensor/relay pair or power outage occurs, the relays will de-energize.

IMPROPER SYSTEM OPERATION WILL RESULT IF ANY ONE OF THESE POSITIONS IS CHANGED WITHOUT REPROGRAMMING.

Be sure to accurately record on the circuit directory the type of module and the location of each device wired to the connector.

DO NOT CONNECT OUTPUT RELAYS TO A DEVICE THAT DRAWS MORE THAN 2 AMPS!

Output Power: Output Relay Contact, Resistive Load — 120 VAC, 2A Max; or 24 VDC, 2A Max.

1. Connect the wires (#14 AWG) from each external device to the appropriate terminals on the output module (see Figure 11, "Relay Output Wiring Diagram").

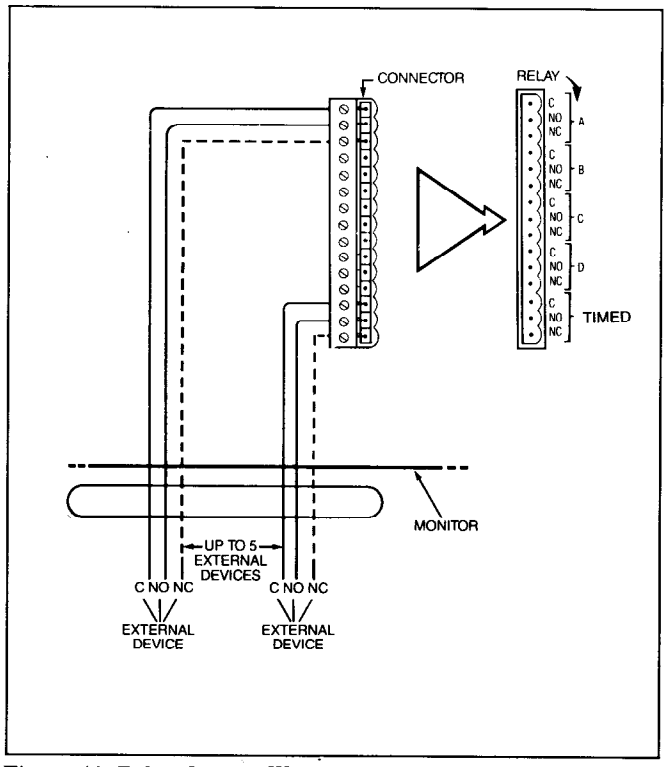

Figure 11. Relay Output Wiring Diagram.

SECTION 5. INTERSTITIAL LIQUID SENSOR INSTALLATION

A. EQUIPMENT PREPARATION.

WARNING: TO AVOID ELECTRICAL SHOCK WHICH COULD KILL YOU, BE SURE AC POWER TO THE MONITOR IS OFF DURING INSTALLATION.

1. Turn OFF power to the ILS-350 system.

NOTE: Do not install the sensor if any liquid is present in the annular space. Failure to comply will lead to an alarm.

2. Make sure no liquid is present in the annular space.

B. INSTALLATION OF FLOAT SWITCH — STEEL TANKS.

1. To be sure the sensor will reach the bottom of the annular space, first measure the sensor riser pipe from the bottom of the pipe to the top. Then measure the same distance up the leader cable from its connection to the sensing element and mark the leader cable.

CAUTION: DO NOT USE A KNIFE OR OTHER SHARP OBJECT TO MARK THE LEADER CABLE. MARK THE DISTANCE WITH A MARKER, TAPE, OR A TWIST TIE.

2. Lower the float switch assembly into the riser pipe until the float switch touches the bottom of the tank (see Figure 12 "Float Switch Installation — Steel Tanks").
3. Keeping the cable taut, secure the sensor assembly in place by attaching the cord grip.

NOTE: The float switch assembly must not hang by the cable, but should rest slightly on the bottom of the tank supported by the cable.

4. Secure the riser cap to the riser pipe.
5. Tighten the cable bushing nuts on the riser cap and junction box to ensure a water-tight seal at the cable entry.
6. Using wire nuts, connect the two-wire sensor cable to the field wires in the sensor junction box (see Figure 13 "Two-Wire Sensor Field Wiring Diagram"). Since these are contact switches, polarity is not a consideration when connecting sensor wires to field wires.

NOTE: SEAL WIRE NUT CONNECTIONS AT THIS TIME USING epoxy sealant, furnished with each sensor.

WARNING: EPOXY SEALANT MAY BE IRRITATING TO EYES AND SKIN. MAY CAUSE SKIN SENSITIZATION IN SUSCEPTIBLE INDIVIDUALS. MAY BE ABSORBED THROUGH THE SKIN. EPOXY SEALANT CONTAINS EPOXY RESIN AND VINYL CYCLOHEXENE DIOXIDE. VINYL CYCLOHEXENE DIOXIDE HAS CAUSED SKIN CANCER IN ANIMAL TESTS.
PRECAUTIONS: AVOID EYE AND SKIN CONTACT. WEAR IMPERVIOUS GLOVES AND SAFETY GLASSES. USE ONLY IN WELL VENTILATED AREAS.

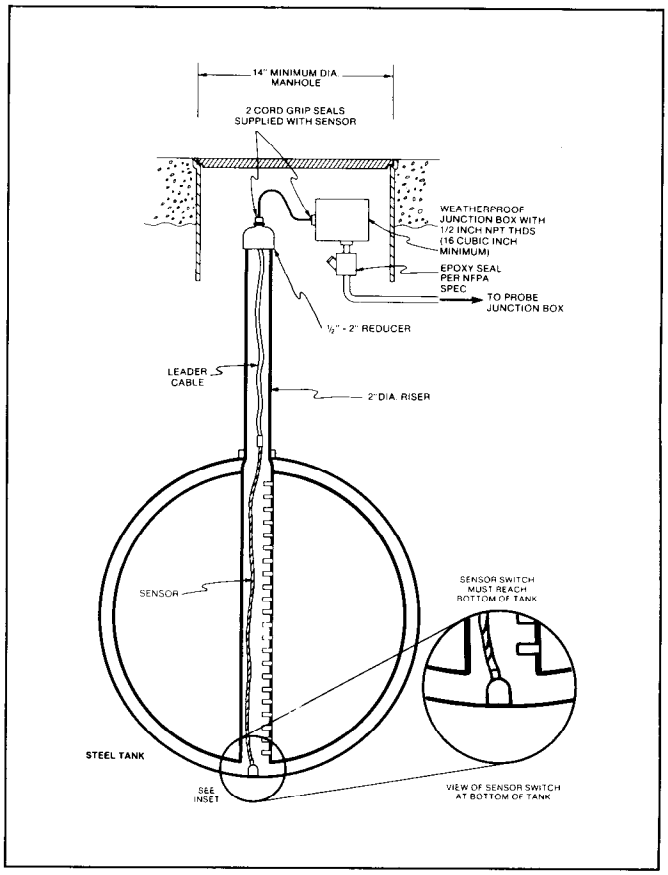

Figure 12. Float Switch Installation — Steel Tanks.

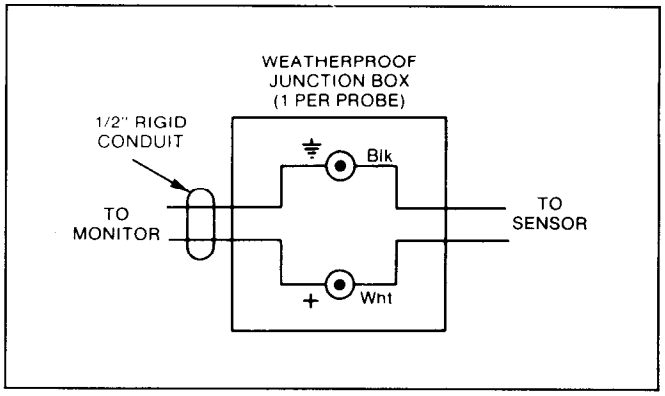

Figure 13. Two-Wire Sensor Field Wiring Diagram.

C. INSTALLATION OF FLOAT SWITCH — FIBERGLASS TANKS.

1. To ensure the sensor will reach the bottom of the annular space, the splice between the leader cable and the sensor must be 1 foot from the bottom of the riser pipe (see Figure 14, "Float Switch Installation — Fiberglass Tank"). First measure the sensor riser pipe from the bottom of the pipe to the top. Subtract one foot from the riser pipe measurement, then measure that distance up the leader cable from its connection to the sensor; mark the leader cable.

CAUTION: DO NOT USE A KNIFE OR OTHER SHARP OBJECT TO MARK THE LEADER CABLE. MARK THE DISTANCE WITH A MARKER, TAPE, OR A TWIST TIE.

NOTE: To ensure proper operation of the float switch, it is important that you order and install the correctly sized sensor in your fiberglass tank. This ensures the float switch will rest as close as possible to the bottom of the tank annulus (see Figure 16, "Sensor Switch Position at Bottom of Tank Annulus").

2. Feed the sensor into the riser pipe until the sensor reaches the top cavity of the tank and rests at the beginning of the annulus (see Figure 15, "Sensor Switch Position at Top of Tank Annulus").

NOTE: The sensor's float is designed with a bend to control direction of installation in your tank annulus. Red dots are painted on the top of the switch and 4 feet up the sensor, as position references during installation. When installing the sensor, the switch will first appear to be upside-down, with the dot facing the bottom (see Figure 15). The switch will rest right-side-up at the bottom of the tank (see Figure 16, "Sensor Switch Position at Bottom of Tank Annulus"), with the reference dots facing in toward the tank.

NOTE: Pull-Cord Installation Method. To ensure proper installation of the sensor using a pull cord, the reference marking 4 feet up the sensor should face toward the pull cord. An eyelet has been provided at the end of the sensor for pull-cord installation (see Figure 15).

3. Before continuing, verify correct switch positioning by connecting an ohm meter to the two-wire cable of the interstitial sensor. The ohm meter should read 0Ω (continuity) at this point. If the meter reads 100kΩ, the float switch is in the wrong position and must be reinstalled correctly.
4. If the switch reads 0Ω, continue to feed the switch into the annular space, until the switch reaches the bottom of the tank (the splice between the sensor and leader cable should be 1 foot from the bottom of the riser pipe).
5. Verify the switch is in the correct position by connecting the ohm meter to the two-wire cable. The ohm meter will read 100kΩ if the sensor is properly installed.
6. Secure the riser cap to the riser pipe.
7. Tighten the cable bushing nuts on the riser cap and junction box to ensure a water-tight seal at the cable entry.
8. Using wire nuts, connect the two-wire sensor cable to the field wires in the sensor junction box (see Figure 13, "Two-Wire Sensor Field Wiring Diagram"). Since these are contact switches, polarity is not a consideration when connecting sensor wires to field wires.

NOTE: SEAL WIRE NUT CONNECTIONS AT THIS TIME USING epoxy sealant, furnished with each sensor.

WARNING: EPOXY SEALANT MAY BE IRRITATING TO EYES AND SKIN. MAY CAUSE SKIN SENSITIZATION IN SUSCEPTIBLE INDIVIDUALS. MAY BE ABSORBED THROUGH THE SKIN. EPOXY SEALANT CONTAINS EPOXY RESIN AND VINYL CYCLOHEXENE DIOXIDE. VINYL CYCLOHEXENE DIOXIDE HAS CAUSED SKIN CANCER IN ANIMAL TESTS.
PRECAUTIONS: AVOID EYE AND SKIN CONTACT. WEAR IMPERVIOUS GLOVES AND SAFETY GLASSES. USE ONLY IN WELL VENTILATED AREAS.

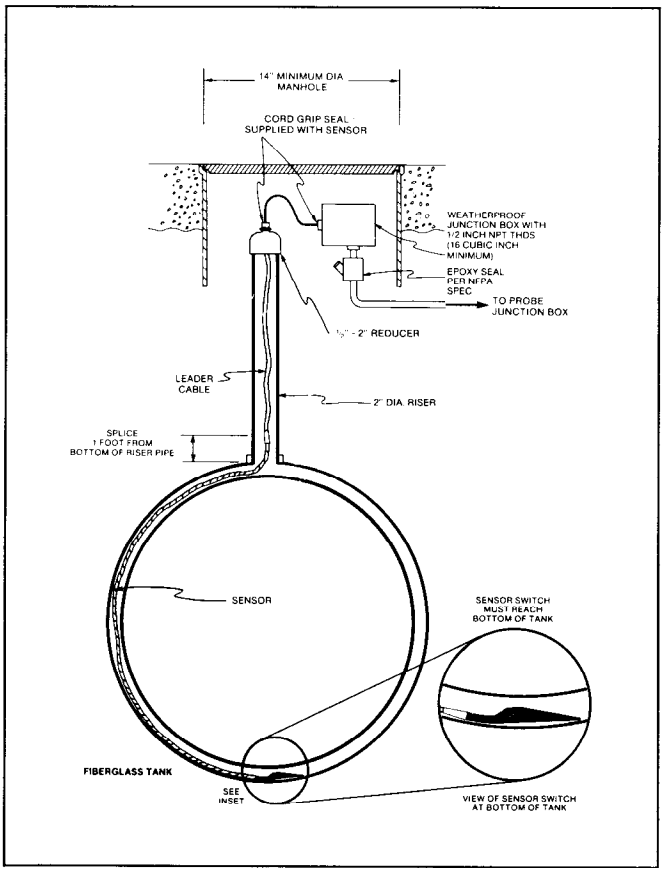

Figure 14. Float Switch Installation — Fiberglass Tanks.

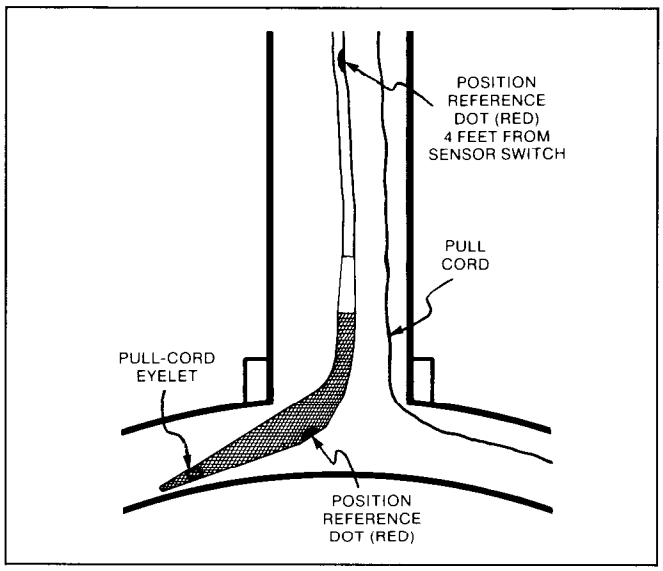

Figure 15. Sensor Switch Position at Top of Tank Annulus.

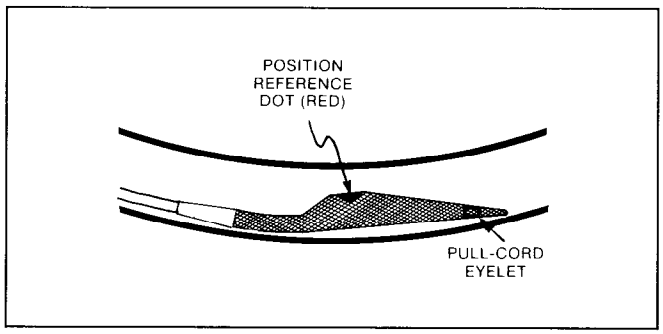

Figure 16. Sensor Switch Position at Bottom of Tank Annulus.

SECTION 6. PIPING SUMP SENSOR SWITCH INSTALLATION

The sump sensor switch comes with the following hardware necessary to mount it within the piping sump:

1 - PVC Mounting Sleeve
1 - Aluminum 90° Mounting Bracket
1 - Cord Grip
2 - #6-20 (0.312″ long) Sheet Metal Screws

A. GENERAL

The sump sensor switch can be mounted in either of two ways: on the sensor junction box using the mounting bracket and sleeve supplied (see Figure 17, "Typical Bracket Mount"); or, by cementing the PVC mounting sleeve directly to the side of a fiberglass containment sump (see Figure 18, "Mounting Sleeve Cemented to Sump Wall").

Before you install the sump sensor switch, there are several important requirements to consider:

1. The sump sensor switch must be positioned as close to the containment sump outer wall as possible.
2. The sump sensor switch must be mounted in a true vertical position to ensure proper operation of the float switch contained inside.
3. There must be at least one inch of clearance between the bottom of the mounting sleeve and the base of the sump.
4. When installed, the sump sensor switch must rest on the base of the sump.

B. INSTALLATION.

The wires between the monitor and each sump sensor switch location must be of a type designed for use in the presence of gasoline and oil, and must be between AWG 14 and AWG 18. The conduit must be properly sealed in accordance with the National Electrical Code (NFPA70) and the Automotive and Marine Service Station Code (NFPA30) since they pass from a Class I, Division I or Division II area into a nonhazardous area.

WARNING: TO AVOID ELECTRICAL SHOCK WHICH COULD KILL YOU, BE SURE AC POWER TO THE MONITOR IS OFF DURING INSTALLATION.

1. **Turn OFF AC power to the ILS-350 system.**

CAUTION: DO NOT INSTALL THE SUMP SENSOR SWITCH IF THERE IS ANY LIQUID IN THE PIPING SUMP. FAILURE TO COMPLY CAN RESULT IN EQUIPMENT DAMAGE OR UNDETECTED POTENTIAL ENVIRONMENTAL AND HEALTH HAZARDS.

2. Make sure no liquid exists in the piping sump.
3. To mount the sump sensor switch using the mounting bracket (see Figure 17, "Typical Bracket Mounting"):

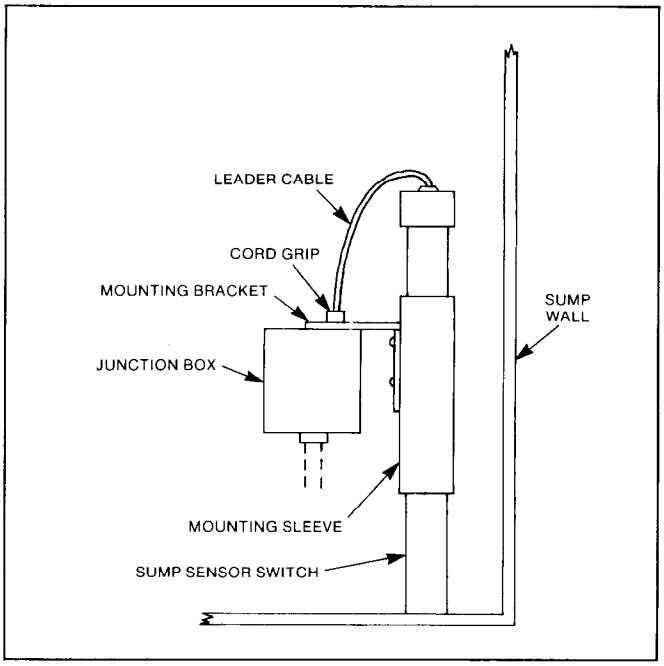

Figure 17. Typical Bracket Mounting.

a. Attach the mounting bracket to the mounting sleeve using the two #6-20 0.312″ long screws furnished.

NOTE: Screw holes drilled in the mounting sleeve are closer to the one end than the other. Check the distance from the top of the junction box to the bottom of the sump to determine which way you will mount the bracket. You must leave some space between the bottom of the mounting sleeve and the base of the sump.

b. Remove one of the plugs from the top of the junction box.

c. Position the mounting bracket on top of the junction box aligning the hole in the bracket with the threaded hole in the box.

d. Install and slightly tighten the cord grip to hold the mounting bracket in position. Turn the bracket so the mounting sleeve is as close to the outer sump wall as possible and fully tighten the cord grip.

e. If necessary, carefully bend the mounting bracket so that the mounting sleeve is in a true vertical position. Using a level, check the mounting sleeve to confirm that it is vertical.

f. Carefully slide the sump sensor switch into the mounting sleeve until it rests on the sump base.

g. Feed the leader cable through the cord grip on the junction box.

h. Tighten the cord grip nut to ensure a water-tight seal at the cable entry.

i. Using wire nuts, connect the two-wire cable to the field wires in the sensor junction box (see Figure 13, "Two-Wire Sensor Field Wiring Diagram"). Since these are contact switches, polarity is not a consideration when connecting sensor wires to field wires.

NOTE: SEAL WIRE NUT CONNECTIONS AT THIS TIME USING epoxy sealant furnished with each sump sensor switch.

WARNING: EPOXY SEALANT MAY BE IRRITATING TO EYES AND SKIN. MAY CAUSE SKIN SENSITIZATION IN SUSCEPTIBLE INDIVIDUALS. MAY BE ABSORBED THROUGH THE SKIN. EPOXY SEALANT CONTAINS EPOXY RESIN AND VINYL CYCLOHEXENE DIOXIDE. VINYL CYCLOHEXENE DIOXIDE HAS CAUSED SKIN CANCER IN ANIMAL TESTS.
PRECAUTIONS: AVOID EYE AND SKIN CONTACT. WEAR IMPERVIOUS GLOVES AND SAFETY GLASSES. USE ONLY IN WELL VENTILATED AREAS.

4. To mount the sump sensor switch by cementing the PVC mounting sleeve to the sump wall (fiberglass sumps only) (see Figure 18, "Mounting Sleeve Cemented to Sump Wall"):

a. Select a position for the mounting sleeve in the sump as far away from the submersible pump as possible.

NOTE: The mounting sleeve must be mounted far enough into the sump to allow the sump sensor switch, when installed, to rest on the base of the sump and mounted at least one inch up from the base.

b. Mark a line on the sump wall indicating the top of the mounting sleeve.

c. Apply cement approved for use with PVC and the sump wall material generously in a line running the complete length of the sleeve.

d. Using a level, position the sleeve vertically at the mark indicated on the sump wall and press it firmly to the side of the sump. BE SURE THE SLEEVE IS VERTICAL.

e. Hold the sleeve in position until the cement has hardened.

f. Install and connect the sump sensor switch following the instructions in Section 5.B.3.f. through 5.B.3.i.

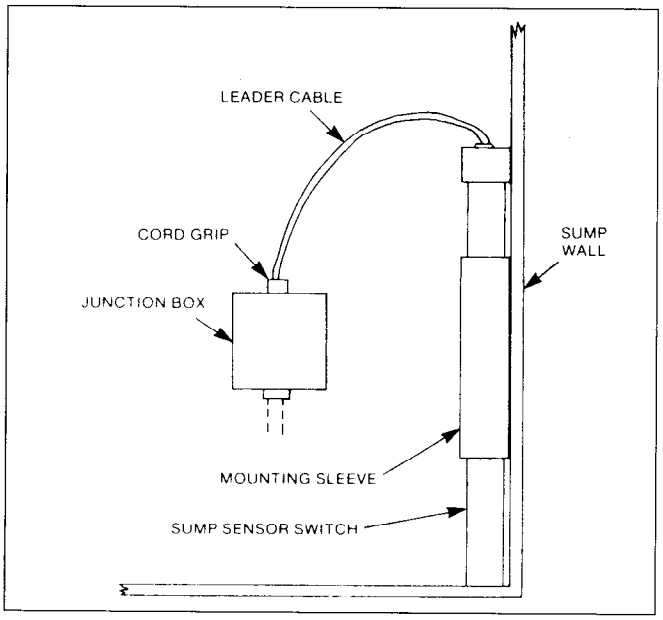

Figure 18. Mounting Sleeve Cemented to Sump Wall.

SECTION 7. VAPOR SENSOR INSTALLATION

WARNING: HIGH VOLTAGES ARE PRESENT IN THESE SYSTEMS. TAKE PRECAUTIONS TO PREVENT PERSONAL INJURY, PROPERTY LOSS AND EQUIPMENT DAMAGE. DISCONNECT AC VOLTAGE AND TURN OFF ALL LINE POWER BEFORE REMOVING AND REPLACING ANY PARTS.

TO AVOID ELECTRICAL SHOCK WHICH COULD KILL YOU, BE SURE AC POWER TO THE SYSTEM IS OFF DURING SERVICE.

WARNING: A VEEDER-ROOT VAPOR SENSOR SHOULD BE INSTALLED ONLY IN WELLS WHERE:

PRELIMINARY TESTING HAS DETERMINED THAT THE SOIL IS NOT CONTAMINATED BEYOND ACCEPTABLE LIMITS, OR

WHERE CONTAMINATED SOIL HAS BEEN REMEDIATED AND IS NOW CLEAN.

A VAPOR SENSOR SHOULD NOT BE INSTALLED IN WELLS WHERE PRELIMINARY TESTING INDICATES THAT THE INITIAL VAPOR SENSOR RESISTANCE EXCEEDS 25k OHMS.

CAUTION: ONLY INSTALL THIS PRODUCT IN WELLS WHERE PRELIMINARY TESTING HAS DETERMINED PRESENT VAPOR LEVELS TO BE ACCEPTABLE FOR ITS USE.

WARNING: TO PROTECT YOURSELF AND OTHERS FROM BEING STRUCK BY VEHICLES DURING WORK, BLOCK OFF YOUR WORK AREA DURING INSTALLATION AND SERVICE.

WARNING: TO AVOID ELECTRICAL SHOCK WHICH COULD KILL YOU, BE SURE AC POWER TO THE ILS-350 MONITOR IS OFF DURING INSTALLATION.

1. Turn OFF AC power to the ILS-350 system.
2. Remove the 4-inch PVC cap from the monitoring well.

WARNING: DO NOT PERFORM DRILLING AND TAPPING PROCEDURES IN A HAZARDOUS AREA. DRILLING AND TAPPING CAN CAUSE SPARKS AND IGNITE VOLATILE FUMES AND LIQUIDS FOUND IN A CLASS I, GROUP D HAZARDOUS LOCATION. FAILURE TO COMPLY COULD RESULT IN DEATH, SERIOUS PERSONAL INJURY, PROPERTY LOSS AND EQUIPMENT DAMAGE.

3. Drill (0.703″ dia.) and tap a ½-inch - 14 NPT pipe thread through the top of the cap.
4. Thread the furnished cord grip into the cap.
5. Pass the sensor cable up through the cord grip from the inside of the cap until the sensor tip hangs at a point that is 12 inches above the highest level to which the water table normally rises. If this level is not known, position the sensor tip 12 inches above the bottom of the monitoring well or 12 inches above any water in the well. Tighten the cord grip to ensure a water-tight cable entry.

NOTE: If the water table rises and immerses the sensor causing a water alarm, loosen the cord grip and reposition the sensor to hang (the higher of) 12 inches above the new water level or 12 inches above its previous position.

6. Measure the cable length required to reach the sensor junction box and trim the cable accordingly.
7. Install the furnished junction box cord grip in one of the threaded junction box access holes.
8. Pass the sensor cable through the cord grip into the junction box. Tighten the cord grip to ensure a water-tight seal at the cable entry.
9. Using wire nuts, connect the three sensor wires to field wires in the junction box (see Figure 19, "Three-Wire Vapor Sensor Wiring Diagram.") Be sure to observe color codes or wire markings to ensure proper polarity hookup to the Vapor Sensor Module connector in the ILS-350 monitor.

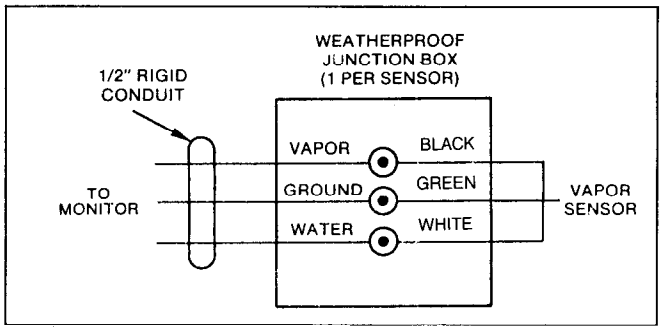

Figure 19. Three-Wire Vapor Sensor Field Wiring Diagrams.

NOTE: SEAL WIRE NUT CONNECTIONS AT THIS TIME USING epoxy sealant, furnished with each sensor.

WARNING: EPOXY SEALANT MAY BE IRRITATING TO EYES AND SKIN. MAY CAUSE SKIN SENSITIZATION IN SUSCEPTIBLE INDIVIDUALS. MAY BE ABSORBED THROUGH THE SKIN. EPOXY SEALANT CONTAINS EPOXY RESIN AND VINYL CYCLOHEXENE DIOXIDE. VINYL CYCLOHEXENE DIOXIDE HAS CAUSED SKIN CANCER IN ANIMAL TESTS.
PRECAUTIONS: AVOID EYE AND SKIN CONTACT. WEAR IMPERVIOUS GLOVES AND SAFETY GLASSES. USE ONLY IN WELL VENTILATED AREAS.

10. Lower the sensor into the monitoring well and secure the riser cap.

SECTION 8. GROUNDWATER SENSOR INSTALLATION

WARNING: TO PROTECT YOURSELF AND OTHERS FROM BEING STRUCK BY VEHICLES DURING WORK, BLOCK OFF YOUR WORK AREA DURING INSTALLATION AND SERVICE.

WARNING: TO AVOID ELECTRICAL SHOCK WHICH COULD KILL YOU, BE SURE AC POWER TO THE ILS-350 MONITOR IS OFF DURING INSTALLATION.

NOTE: The wires between the monitor and each groundwater sensor location must be of a type designed for use in the presence of gasoline and oil, and must be between AWG 14 and AWG 18. The conduit must be properly sealed in accordance with the National Electrical Code (NFPA70) and the Automotive and Marine Service Station Code (NFPA 30A) since they pass from a Class I, Division II area into a non-hazardous area.

1. Turn OFF AC power to the ILS-350 system.
2. Remove any existing cap from the monitoring well. (A new cap is supplied with the Veeder-Root Groundwater Sensor.)
3. Lower the groundwater sensor into the monitoring well until the water float touches the bottom of the well.
4. Raise the sensor 2″ to 4″ from the bottom of the well and mark the sensor with a piece of tape at the point even with the top of the well casing.
5. Secure the sensor at the point marked with the tape to the retainer under the sensor well cap. Allow any excess sensor length (should be no more than 2′) to hang loosely from the retainer. See Figure 20, "Groundwater Sensor Installation."
6. Press the sensor well cap into the top of the well with the excess sensor length hanging inside the well housing.
7. Pass the end of the three-wire sensor cable in though the cable bushing nut of the sensor junction box.

NOTE: The groundwater sensor comes equipped with a cable and threaded connector. If the cable is not installed on the sensor well cap, screw it into the mating connector on top of the cap.

CAUTION: CARE MUST BE TAKEN TO PROTECT THE PLUG AND CONNECTOR FROM CONTAMINANTS, INCLUDING WATER. WHEN DISCONNECTING, TURN THE CAP UPSIDE DOWN TO PREVENT WATER FROM DROPPING INTO THE CONNECTOR.

8. Using wiring nuts, connect the wires from the sensor cable to the sensor field wires in the junction box (see Figure 21, "Groundwater Sensor Field Wiring Diagram"). Be sure to observe proper polarity between the sensor and monitor wiring during installation.

NOTE: Using epoxy sealant furnished with each sensor, seal wire nut and cable connections at this time.

WARNING: EPOXY SEALANT MAY BE IRRITATING TO EYES AND SKIN. MAY CAUSE SKIN SENSITIZATION IN SUSCEPTIBLE INDIVIDUALS. MAY BE ABSORBED THROUGH THE SKIN. EPOXY SEALANT CONTAINS EPOXY RESIN AND VINYL CYCLOHEXENE DIOXIDE. VINYL CYCLOHEXENE DIOXIDE HAS CAUSED SKIN CANCER IN ANIMAL TESTS.

PRECAUTIONS: AVOID EYE AND SKIN CONTACT. WEAR IMPERVIOUS GLOVES AND SAFETY GLASSES. USE ONLY IN WELL VENTILATED AREAS.

9. Tighten the cable bushing nut on the junction box to ensure a water-tight seal at the sensor cable entry.

10. Press down the locking handle on the sensor well cap to secure it in position and to form a water-tight seal between the sensor well cap and the monitoring well housing.

NOTE: For additional security, a padlock may be installed on the sensor well cap to ensure that the locking handle remains in position and the well cannot be opened by unauthorized personnel.

SECTION 9. WARRANTY CONDITIONS AND LIMITATIONS OF LIABILITY

A. LIMITATIONS OF LIABILITY. We warrant that this product shall be free from defects in material and workmanship for a period of one (1) year from the date of installation or fifteen (15) months from the date of invoice, whichever occurs first. During the first ninety (90) days of this warranty period, we will repair or replace the product, if determined by us to be defective, at the location where the product is in use and at no charge to the purchaser. After the first ninety (90) days of the warranty period, we will repair or replace the product if it is returned to us, transportation prepaid, within the warranty period and is determined by us to be defective. We will not be responsible for any shipping expenses incurred by the user.

This warranty applies only when the product is installed in accordance with Veeder-Root's specifications, and a Warranty Registration and Checkout Form has been filed with Veeder-Root by an authorized Veeder-Root Distributor. This warranty will not apply to any product which has been subject to misuse, negligence, or accident; or misapplied; or used in violation of product manuals, instructions or warnings; or modified or repaired by unauthorized persons; or improperly installed.

B. INSPECTION. You shall inspect the product promptly after receipt and shall notify us in writing of any claims, including claims of breach of warranty, within thirty days after you discover or should have discovered the facts upon which the claim is based. Your failure to give written notice of a claim within the time period shall be deemed to be a waiver of such claim.

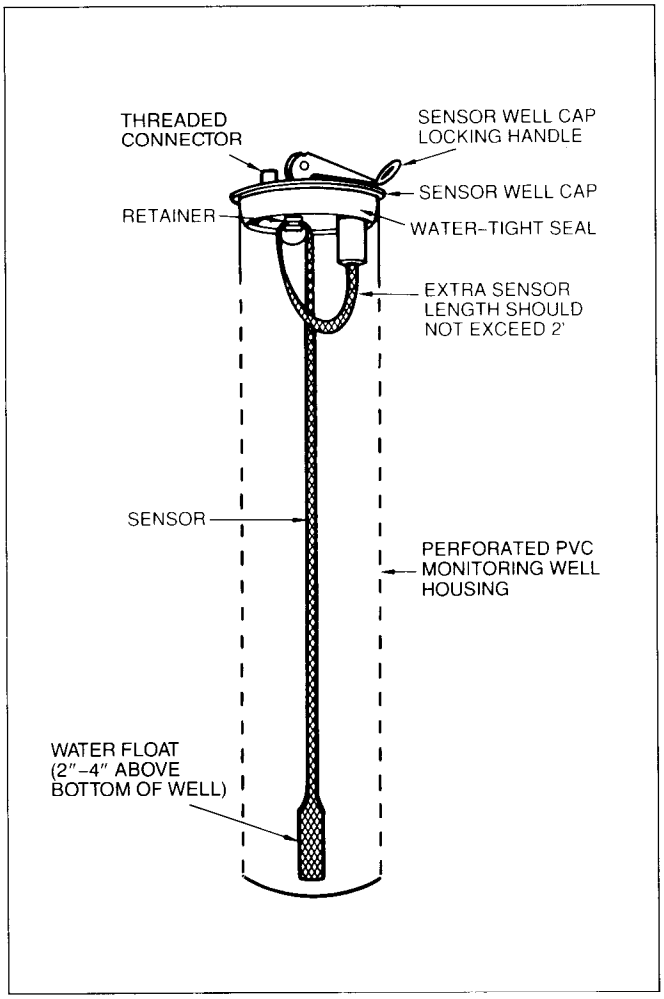

Figure 20. Groundwater Sensor Installation

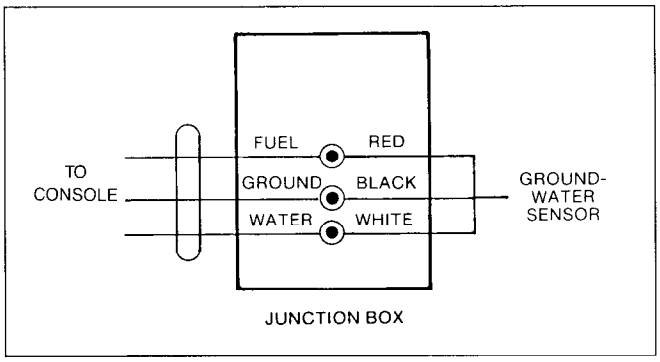

Figure 21. Groundwater Sensor Field Wiring Diagram

C. LIMITATION OF REMEDY AND WARRANTY. The provisions of Paragraph A are our sole obligation and exclude all other remedies or warranties, express or implied, including warranties of MERCHANTABILITY and FITNESS FOR A PARTICULAR PURPOSE, whether or not purposes or specifications are described herein. We further disclaim any responsibility whatsoever to you or to any other person for injury to person or damage to or loss of property or value caused by any product which has been subjected to misuse, negligence, or accident; or misapplied; or used in violation of product manuals, instructions or warnings; or modified or repaired by unauthorized persons; or improperly installed.

D. LIMITATION OF DAMAGES: Under no circumstances shall we be liable for any incidental, consequential or special damages, losses or expenses arising from this contract or its performance or in connection with the use of, or inability to use, our product for any purpose whatsoever.

E. LIMITATION OF ACTIONS. No action regardless of form arising out of this contract may be commenced more than one year after the cause of action has accrued, except an action for nonpayment.

F. COLLATERAL PROMISES. There are no representations, warranties, or conditions express or implied, statutory or otherwise except those herein contained, and no agreements or waivers collateral hereto shall be binding on either party unless in writing and signed by you and accepted by us at our Simsbury office.

G. INTERPRETATION. Rights and liabilities arising out of any contract with us shall be determined under the Uniform Commercial Code as enacted in Connecticut.

APPENDIX A: WIRING RECORD — INTRINSICALLY SAFE AREA

These wiring record forms are intended for the installer's use to accurately record the wiring scheme and wiring identification for sensors connected to the ILS-350 console. The following information will be helpful in understanding its use.

CAUTION: FAILURE TO IDENTIFY AND MAINTAIN THE RELATIONSHIP OF WIRES BETWEEN SENSOR LOCATIONS AND THEIR POSITIONS ON SENSOR CONNECTORS COULD RESULT IN THE INCORRECT IDENTIFICATION OF A LEAK TYPE OR LEAK LOCATION, OR IMPROPER SYSTEM OPERATION. IT IS CRITICAL THAT YOU PROPERLY IDENTIFY, RECORD AND MAINTAIN THESE WIRING RELATIONSHIPS!

MODULE POSITION: The position in the intrinsically safe module area where the module is installed. See the Circuit Directory located on the inside of the ILS-350 door.

MODULE TYPE: Identify what type of module is installed in this position (i.e. two- or three-wire).

SENSOR IDENTIFICATION: Identify the sensor type connected to this module location (i.e. Tank #1, Vapor Sensor — NW Corner, etc).

TERMINAL IDENTIFICATION: Interstitial and Sensor connectors have two terminals per sensor position (+ and −). Vapor Sensor connectors have three terminals per sensor (a = Vapor, C = Ground, and b = Water).

COLOR CODE OR MARKING: Record the color or marking that identifies each wire running from the sensor to the ILS-350 console.

MODULE POSITION #1
MODULE TYPE: _____

MODULE POSITION #1
MODULE TYPE: _____

SENSOR IDENTIFICATION	TERMINAL IDENTIFICATION		COLOR CODE or MARKING
	Two-Wire Probe/Sensors	Three-Wire Sensors	
TERMINAL POSITION #1:	+	a	
	–	C	
		b	
TERMINAL POSITION #2:	+	a	
	–	C	
		b	
TERMINAL POSITION #3:	+	a	
	–	C	
		b	
TERMINAL POSITION #4:	+	a	
	–	C	
		b	

MODULE POSITION #2
MODULE TYPE: _____

SENSOR IDENTIFICATION	TERMINAL IDENTIFICATION		COLOR CODE or MARKING
	Two-Wire Probe/Sensors	Three-Wire Sensors	
TERMINAL POSITION #1:	+	a	
	–	C	
		b	
TERMINAL POSITION #2:	+	a	
	–	C	
		b	
TERMINAL POSITION #3:	+	a	
	–	C	
		b	
TERMINAL POSITION #4:	+	a	
	–	C	
		b	

MODULE POSITION #3
MODULE TYPE: _____

SENSOR IDENTIFICATION	TERMINAL IDENTIFICATION		COLOR CODE or MARKING
	Two-Wire Probe/Sensors	Three-Wire Sensors	
TERMINAL POSITION #1:	+	a	
	–	C	
		b	
TERMINAL POSITION #2:	+	a	
	–	C	
		b	
TERMINAL POSITION #3:	+	a	
	–	C	
		b	
TERMINAL POSITION #4:	+	a	
	–	C	
		b	

MODULE POSITION #4
MODULE TYPE: _____

SENSOR IDENTIFICATION	TERMINAL IDENTIFICATION		COLOR CODE or MARKING
	Two-Wire Probe/Sensors	Three-Wire Sensors	
TERMINAL POSITION #1:	+	a	
	–	C	
		b	
TERMINAL POSITION #2:	+	a	
	–	C	
		b	
TERMINAL POSITION #3:	+	a	
	–	C	
		b	
TERMINAL POSITION #4:	+	a	
	–	C	
		b	

VEEDER-ROOT
Environmental Products

125 Powder Forest Drive, Post Office Box 2003, Simsbury, CT 06070-2003 TEL: (203) 651-2700, FAX: (203) 651-2719

AUSTRALIA: Cheltenham, Victoria • BRAZIL: Sao Paulo • ENGLAND: Richmond, Surrey • FRANCE: Rungis Cedex • GERMANY: Neuhausen/Filder

576013-773 12292 replaces 12126

VI 6 PRINTED IN U.S.A. 92