GASBOY

Series 9800A/9800Q Pumps and Dispensers

Installation/Operation Manual

MDE-4341B

Computer Programs and Documentation

All Gasboy computer programs (including software on diskettes and within memory chips) and documentation are copyrighted by, and shall remain the property of, Gasboy. Such computer programs and documents may also contain trade secret information. The duplication, disclosure, modification, or unauthorized use of computer programs or documentation is strictly prohibited, unless otherwise licensed by Gasboy.

Federal Communications Commission (FCC) Warning

This equipment has been tested and found to comply with the limits for a Class A digital device pursuant to Part 15 of the FCC Rules. These limits are designed to provide reasonable protection against harmful interference when the equipment is operated in a commercial environment. This equipment generates, uses, and can radiate radio frequency energy, and if not installed and used in accordance with the instruction manual, may cause harmful interference to radio communications. Operation of this equipment in a residential area is likely to cause harmful interference in which case the user will be required to correct the interference at his own expense. Changes or modifications not expressly approved by the manufacturer could void the user's authority to operate this equipment.

Approvals

Gasboy, Greensboro, is an ISO 9001:2000 registered facility.

Underwriters Laboratories (UL):

UL File#	Products listed with UL
MH4314	All dispensers and self-contained pumping units
MH6418	Power operated Transfer Pump Models 25, 25C, 26, 27, 28, 72, 72S, 72SP, 72X, 73 and 1820
MH7404	Hand operated Transfer Pump Models 1230 Series, 1243 Series, 1520 and 1720 Series
MH10581	Key control unit, Model GKE-B Series
	Card reader terminals, Models 1000, 1000P
	Site controller, Model 2000S CFN Series
	Data entry terminals, Model TPK-900 Series
	Fuel Point Reader System

New York City Fire Department (NYFD):

NYFD C of A #	Product
4823	9100A, 9140A, 9152A, 9153A, 9800A, 9840A, 9850A, 9852A, 9853A, 9140
4997	9822A, 9823A
5046	9100Q, 9140Q, 9152Q, 9153Q, 9800Q, 9840Q, 9852Q, 9853Q
5087	8753K, 8853K, 9153K, 9853K (restricted to diesel and non-retail gasoline sales)

California Air Resources Board (CARB):

Executive Order #	Product
G-70-52-AM	Balance Vapor Recovery
G-70-150-AE	VaporVac

National Conference of Weights and Measures (NCWM) - Certificate of Compliance (CoC):

Gasboy pumps and dispensers are evaluated by NCWM under the National Type Evaluation Program (NTEP). NCWM has issued the following CoC:

CoC#	Product	Model #	CoC#	Product	Model #
95-179A2	Dispenser	9100 Retail Series, 8700 Series, 9700 Series	91-019A2	Dispenser	9100 Commercial Series
95-136A5	Dispenser	9800 Series	91-057A3	Controller	1000 Series FMS, 2000S-CFN Series

Patents

Gasboy products are manufactured or sold under one or more of the following US patents:

Dispensers

5,257,720

Point of Sale/Back Office Equipment

D335,673

Additional US and foreign patents pending.

Trademarks

Non-registered trademarks

Atlas™
Consola™
Infinity™

Registered trademarks

ASTRA®
Fuel Point®
Gasboy®
Keytrol®
Slimline®

Additional US and foreign trademarks pending.

Other brand or product names shown may be trademarks or registered trademarks of their respective holders.

PETROLEUM EQUIPMENT INSTITUTE

Table of Contents

1 – Introduction

Purpose

This manual provides instructions to install and operate Series 9800A/9800Q Pumps and Dispensers. This manual should be given to the electrician prior to the installation of conduit and wiring, to ensure proper installation of the Series 9800A and 9800Q dispensing unit. Faulty installations are the major cause of unit malfunctions. The unit must be installed and operated as described in this manual, to ensure the reliability and proper operation of the Series 9800A and 9800Q dispensing unit. In addition to installation information, this manual contains warnings, safeguards, and procedures on the use and care of the Series 9800A and 9800Q pumps and remote dispensers. You must leave this manual with the pump/remote dispenser owner after the installation is complete.

Note: If you have questions pertaining to the installation, contact your Gasboy® distributor.

Abbreviations and Acronyms

Term	Description
AWG	American Wire Gauge
ATC	Automatic Temperature Compensation
FPR	Fuel Point Reader
FMS	Fuel Management System
GPM	Gallons Per Minute
LPM	Liters Per Minute
ICR	Island Card Reader
LCD	Liquid Crystal Display
UL	Underwriters Laboratories

General Description

The Gasboy Series 9800A and 9800Q dispensing units are Underwriters Laboratories (UL®) listed and are available in self-contained (suction pump) and remote-controlled (remote dispenser) packages. Both the packages offer a variety of models which are available as single hose outlets or dual hose outlets (with single or dual product capability). The self-contained models are available in standard speed [up to 15 Gallons Per Minute (GPM)/56 Liters Per Minute (LPM)] or in high speed (up to 22 GPM/83 LPM). The self-contained package also has a single hose model with high capacity speed (up to 26 GPM/98 LPM), a dual flow unit (up to 40 GPM/151 LPM), and a high flow unit (up to 50 GPM/189 LPM). The rate of delivery for the remote-controlled packages will vary depending upon the size of the submersible pump. The delivery rate of both packages will also vary depending upon installation conditions and added accessories.

The **Series 9800Q** offers the following features:

	Suction Pumps	Remote Dispensers	Features
Standard Speed Models	9852Q 9852QTW1 9852QTW2	9852QX 9852QXTW1 9852QXTW2	Inlet: 1-1/2" NPT Discharge: 3/4" NPT (female threads) Motor: 3/4 HP continuous duty Valves (when used): 3/4"
High Speed Models	9853Q 9853QTW2 9853QTW1M	9853QX 9853QXTW1 9853QXTW2	Inlet: 1-1/2" NPT Discharge: 1" NPT (female threads) Motor: 3/4 HP continuous duty Valves (when used): 1"
Super Speed Model (up to 40 GPM)	9840Q	9840QX	Inlet: 2" NPT Discharge: 1-1/4" NPT (female threads) with 1-1/4"x1" reducer bushing Motor: two 3/4 HP continuous duty Valves (when used): 1-1/2"

9800A

All models of the Series 9800A have electronic registration of the quantity of fuel dispensed. The following lists detail the standard features and the available options found in the 9800A.

Standard Features

- 1 inch high, 6-digit, backlighted Liquid Crystal Display (LCD)
- Dual stage solenoid valves (standard only on remote dispensers)
- Dual-phase, error-checking pulsers
- Leak detect delay for use with submersible pump leak detectors
- AC authorization lines to control the pump/remote dispenser

- Reset complete (switch detect) output which allows you to monitor the unit's operation when it is connected to an automated fueling system
- Resettable electronic totalizers
- Hose hangers
- Discharge elbows
- A 12 feet long, listed gasoline hose assembly
- Unions for all suction pumps and remote dispensers
- All models except the high flow units use a quiet and efficient gear pump that features an air eliminator, built into the pump casting. The pump meter is a three piston, positive displacement meter that is tested and calibrated for accuracy at any speed or pressure up to the maximum working pressure of 50 psi (3.45 Bar).

The high flow model uses a vane-type pump with a separate air eliminator. The pump meter is a 1-1/2 ” (38 mm), six-step, rotary motion, positive displacement unit.

- The standard cabinet finish unit has the top, sides, and bezel painted black while the front and back panels are painted white.
- The height of the cabinets is 52-5/8 ” (1337 mm). The other dimensions may be found in the section “Installation” on page 11 and on the single sheet base layout for each model.

Optional Features

- Pulser output drive lines (open collector), capable of driving 1, 10, 100, 250, or 500 pulses per unit (gallons) or 1, 10, or 100 pulses per unit (liters). Pulse output rates for the 9850A cannot exceed 100 pulses per unit (gallons) or 10 per unit (liters).
- RS-485 communication for direct connection to Gasboy CFN or TopKAT™ equipment.
- Battery backup for display of last transaction and capture of remnant pulse count in the event of a power failure.
- Submersible drive relays capable of handling 3/4 HP at 115 VAC or 1-1/2 HP at 230 VAC motors.
- Fluorescent lighting for the faceplate and brand panel (115 VAC only).
- Mechanical totalizers.
- Dual stage solenoid valves (pumps).
- A working voltage of 115 VAC 60 HZ for domestic use, 230 VAC 50 HZ for international use.
- Other options include listed automatic nozzles, special lengths of listed hose assembly, listed dual swivels, internal hose retrievers, UL-recognized filters, front and back pump panels painted to the color specified by the customer, stainless steel panels, listed emergency shutoff valves, and satellite piping.

9800Q

All models of the Series 9800Q offer electronic registration of the quantity dispensed. The following list provides the standard features and the available options found in the 9800Q.

Standard Features

- Cabinet: Top and sides painted black, white front and rear doors and white dial enclosures. Dimensions are 29-1/16" W, 18-3/8" D, 52-5/8" H.
- Meter: Four piston, positive displacement.
- Pump: Belt-driven, positive-displacement rotary vane with an 80 mesh (300 micron) strainer and integral air separation.
- Motor: (See the chart below the section, "General Description" on page 2).
- Reset Complete (switch detect) output which allows monitoring of the unit's operation when it is connected to an automated Fuel Management System (FMS).
- Dual stage solenoid valves (standard only on remote dispensers).
- Island-oriented nozzle boots.
- UL listed hose assembly, 3/4"x 12' for standard speed; 1" x 12' for high and super speed.
- Designed to support UL-listed interchangeable service station nozzles (not included).
- Hose hangers.
- Dual phase, error-checking pulsers.
- Non-computing register (volume only) displays, 1" backlighted LCD displays. Records up to 999.000 gallons.
- Electronic totalizers, viewed from the back side of the unit, records, up to 999,999 liters or gallons. Battery-backed, resettable.
- Fluids: Gasoline, diesel, kerosene. Not suitable for methanol/ethanol blends.
- Agencies: UL, CUL, W&M.

Optional accessories

- Pulser output drive lines (open collector) capable of driving 1, 10, 100, 250, or 500 pulses per unit (gallons) or 1, 10, or 100 pulses per unit (liters)
- Inlet check valve
- Internal hose retractor
- Internal fuel filter adapter
- Solenoid valve
- Satellite piping
- Stainless steel exterior or special painting
- 230 or 380 VAC operation
- Liter registration
- Listed automatic nozzles
- Special lengths of hose
- Listed swivels and breakaways
- Spin-on filter elements
- Listed emergency shutoff valves
- Listed pressure regulating valve for aboveground tank applications used with suction pumps

- Front load nozzle arrangement
- TopKAT mounting
- Battery-backup for electronic display
- Export packaging
- Automatic Temperature Compensation (ATC)
- RS-485 communication for direct connection to Gasboy CFN or TopKAT equipment
- Submersible drive relays capable of handling 3/4 HP at 115 VAC or 1-1/2 HP at 230 VAC
- Fluorescent lighting for the faceplate and brand panel

This page is intentionally left blank.

2 – Important Safety Information

This section introduces the hazards and safety precautions associated with installing, inspecting, maintaining or servicing this product. Before performing any task on this product, read this safety information and the applicable sections in this manual, where additional hazards and safety precautions for your task will be found. Fire, explosion, electrical shock or pressure release could occur and cause death or serious injury if these safe service procedures are not followed.

Preliminary Precautions
You are working in a potentially dangerous environment of flammable fuels, vapors, and high voltage or pressures. Only trained or authorized individuals knowledgeable in the related procedures should install, inspect, maintain or service this equipment.

Emergency Total Electrical Shut-Off
The first and most important information you must know is how to stop all fuel flow to the pump and island. Locate the switch or circuit breakers that shut-off all power to all fueling equipment, dispensing devices, and submerged turbine pumps (STPs).

WARNING

The EMERGENCY STOP, ALL STOP, and PUMP STOP buttons at the cashier's station WILL NOT shut off electrical power to the pump/dispenser.

This means that even if you activate these stops, fuel may continue to flow uncontrolled.

You must use the TOTAL ELECTRICAL SHUT-OFF in the case of an emergency and not only these cashier station "stops."

Total Electrical Shut-Off Before Access
Any procedure requiring access to electrical components or the electronics of the dispenser requires total electrical shut-off of that unit. Know the function and location of this switch or circuit breaker before inspecting, installing, maintaining, or servicing Gasboy equipment.

Evacuation, Barricading and Shut-Off
Any procedures requiring accessing the pump/dispenser or STPs requires the following three actions:

An evacuation of all unauthorized persons and vehicles using safety tape, cones or barricades to the effected units. A total electrical shut-off of that unit.

Read the Manual
Read, understand and follow this manual and any other labels or related materials supplied with this equipment. If you do not understand a procedure, call a Gasboy Authorized Service Contractor or call the Gasboy Service Center at 1-800-444-5529. It is imperative to your safety and the safety of others to understand the procedures before beginning work.

Follow the Regulations
There is applicable information in NFPA 30A; *Automotive and Marine Service Code*, NFPA 70; *National Electrical Code (NEC)*, OSHA regulations and federal, state, and local codes which must be followed. Failure to install, inspect, maintain or service this equipment in accordance with these codes, regulations and standards may lead to legal citations with penalties or affect the safe use and operation of the equipment.

Replacement Parts
Use only genuine Gasboy replacement parts and retrofit kits on your pump/dispenser. Using parts other than genuine Gasboy replacement parts could create a safety hazard and violate local regulations.

Safety Symbols and Warning Words

This section provides important information about warning symbols and boxes.

Alert Symbol

This safety alert symbol is used in this manual and on warning labels to alert you to a precaution which must be followed to prevent potential personal safety hazards. Obey safety directives that follow this symbol to avoid possible injury or death.

Signal Words
These signal words used in this manual and on warning labels tell you the seriousness of particular safety hazards. The precautions that follow must be followed to prevent death, injury or damage to the equipment

DANGER - This signal word is used to alert you to a hazard to unsafe practice which will result in death or serious injury

WARNING - This alerts you to a hazard or unsafe practice that could result in death or serious injury.

CAUTION with Alert symbol - This signal word designates a hazard or unsafe practice which may result in minor injury.

CAUTION without Alert symbol - When used by itself, CAUTION designates a hazard or unsafe practice which may result in property or equipment damage.

Working With Fuels and Electrical Energy

Prevent Explosions and Fires
Fuels and their vapors will become explosive if ignited. Spilled or leaking fuels cause vapors. Even filling customer tanks will cause explosive vapors in the vicinity of dispenser or island.

No Open Flames

Open flames from matches, lighters, welding torches or other sources can ignite fuels and their vapors.

No Sparks - No Smoking 

Sparks from starting vehicles, starting or using power tools, burning cigarettes, cigars or pipes can also ignite fuels and their vapors. Static electricity, including an electrostatic charge on your body, can cause a spark sufficient to ignite fuels and their vapors. After getting out of a vehicle, touch the metal of your vehicle to discharge any electrostatic charge before you approach the dispenser island.

Working Alone

It is highly recommended that someone who is capable of rendering first aid be present during servicing. Be familiar with Cardiopulmonary Resuscitation (CPR) methods if you are working with or around high voltages. This information is available from the American Red Cross. Always advise the station personnel about where you will be working, and caution them not to activate power while you are working on the equipment. Use the OSHA tag out and lock out procedures. If you are not familiar with this requirement, refer to information in the service manual and OSHA documentation.

Working With Electricity Safely

Ensure to use safe and established practices in working with electrical devices. Poorly wired devices may cause a fire, explosion or electrical shock. Ensure grounding connections are properly made. Ensure that sealing devices and compounds are in place. Ensure not to pinch wires when replacing covers. Follow OSHA Lock-Out and Tag-Out requirements. Station employees and service contractors need to understand and comply with this program completely to ensure safety while the equipment is down.

Hazardous Materials

Some materials present inside electronic enclosures may present a health hazard if not handled correctly. Ensure to clean hands after handling equipment. Do not place any equipment in mouth.

WARNING

This area contains a chemical known to the State of California to cause cancer.

WARNING

This area contains a chemical known to the State of California to cause birth defects or other reproductive harm.

IMPORTANT: Oxygen may be needed at scene if gasoline has been ingested or inhaled. Seek medical advice immediately.

Emergency First Aid

Informing Emergency Personnel

Compile the following information and inform emergency personnel:

- Location of accident (for example, address, front/back of building, and so on).
- Nature of accident (for example, possible heart attack, run over by car, burns, and so on).
- Age of victim (for example, baby, teenager, middle-age, elderly).
- Whether or not victim has received first aid (for example, stopped bleeding by pressure, and so on).
- Whether or not a victim has vomited (for example, if swallowed or inhaled something, and so on).

WARNING

Gasoline ingested may cause unconsciousness and burns to internal organs.
Do not induce vomiting.
Keep airway open.
Oxygen may be needed at scene.
Seek medical advice immediately.

WARNING

Gasoline inhaled may cause unconsciousness and burns to lips, mouth and lungs.
Keep airway open.
Seek medical advice immediately.

WARNING

Gasoline spilled in eyes may cause burns to eye tissue.
Irrigate eyes with water for approximately 15 minutes.
Seek medical advice immediately

WARNING

Gasoline spilled on skin may cause burns.
Wash area thoroughly with clear/water.
Seek medical advice immediately.

IMPORTANT: Oxygen may be needed at scene if gasoline has been ingested or inhaled. Seek medical advice immediately.

Lockout/Tagout

Lockout/Tagout covers servicing and maintenance of machines and equipment in which the unexpected energization or start up of the machine(s) or equipment or release of stored energy could cause injury to employees or personnel. Lockout/Tagout applies to all mechanical, hydraulic, chemical or other energy, but does not cover electrical hazards. Reference Subpart S of 29 CFR Part 1910 - Electrical Hazards, 29 CFR Part 1910.333 contains specific Lockout/Tagout provision for electrical hazards.

Hazards and Actions

WARNING

Spilled fuels, accidents involving pumps/dispensers, or uncontrolled fuel flow create a serious hazard.
Fire or explosion may result, causing serious injury or death.
Follow established emergency procedures.

The following actions are recommended regarding these hazards:

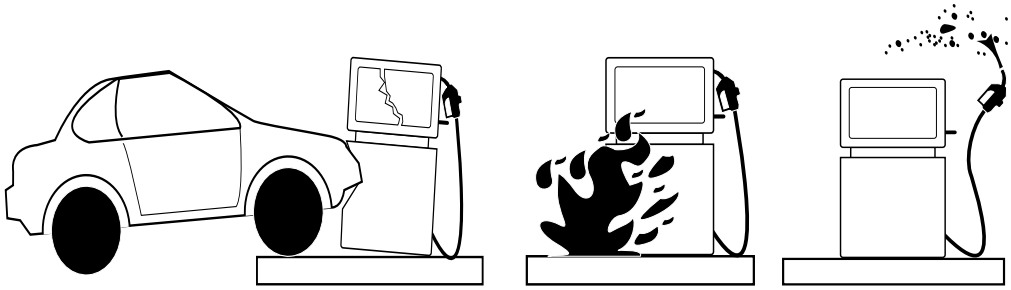

Collision of a Vehicle with Unit | Fire at Island | Fuel Spill

- Do not go near a fuel spill or allow anyone else in the area.
- Use station EMERGENCY CUTOFF immediately. Turn off all system circuit breakers to the island(s).
- Do not use console E-STOP, ALL STOP and PUMP STOP to shut off power. These keys do not remove AC power and do not always stop product flow.
- Take precautions to avoid igniting fuel. Do not allow starting of vehicles in the area. Do not allow open flames, smoking or power tools in the area.
- Do not expose yourself to hazardous conditions such as fire, spilled fuel or exposed wiring.
- Call emergency numbers.

This page is intentionally left blank.

3 – Installation

Installation Precautions

All installations must conform with all building/fire codes, all Federal, State, and Local codes, National Electrical Code, NFPA 70, NFPA 30, and Automotive and Marine Service Station Code (NFPA 30A) codes and regulations. Installations in Canada must also comply with the Canadian Electrical Code.

Plan your installation carefully. A pump/remote dispenser will not work satisfactorily unless the underground installation is done correctly. Dispensing troubles, which appear to be pump-related, are often traced to faulty installation. Review the following list of **DOs** and **DON'Ts** to avoid potential problems:

1. Read the Important Safety Information in this manual. It contains important information regarding the safe use of your dispensing equipment.

2. Install an emergency power cutoff. In addition to circuit breaker requirements of NFPA 70 and NFPA 30A, a single control which simultaneously removes AC power from all site dispensing equipment is recommended. This control must be readily accessible, clearly labeled, and should be in accordance with all local codes.

3. In an FMS application, the EMERGENCY STOP and STOP keys on the console and/or the optional EMERGENCY STOP button on the Island Card Reader (ICR) do not remove AC power from the equipment and under certain conditions, will not stop product flow.

4. To ensure the highest level of safety to you, employees, and customers, it is recommended that all employees be trained as to the location and procedure for turning off power to the entire system.

5. Ensure that the pump/remote dispenser is installed by a competent installer/electrician.

6. Install a breakaway coupling on the discharge hose. If you are using a high hose retriever, install the breakaway approximately 12 ” downwards from the hose clamp on the nozzle side of the clamp.

7. **DO NOT** attempt to wire a pump/remote dispenser without first reviewing the appropriate wiring diagram and notes. Wiring diagrams contain important restrictions regarding the connection of additional equipment.

CAUTION

Failure to follow the correct wiring diagram may result in damage to the CPU PCB.

8 **DO NOT** experiment with a pump if you are not sure if the installation is correct.

9 **DO NOT** overload sub-breaker or main-breaker panels.

10 **DO NOT** install any underground piping without proper swing joints (always use shoulder nipples, never close nipples).

11 **DO NOT** cover any lines until they have been both air and liquid-tested.

12 **DO NOT** back-fill the tank or supply line with cinders or ashes. (Back-fill with clean sand, crushed rock, or pea gravel).

13 **DO NOT** use black iron pipe or fittings for underground installations. Use only new galvanized or fiberglass pipe and fittings.
Note: Install all fiberglass pipe and fittings as per manufacturer's specifications and requirements.

14 **DO NOT** use power line wiring of inadequate capacity (use gauge specified by the wiring diagram or wire chart provided in Section 4).

15 **DO NOT** use a circuit breaker of improper size (see Wiring on Page 53).

16 **DO NOT** install fill pipe to tank where it can be submerged with standing water.

17 **DO NOT** use the Gasboy fuel dispensing equipment to remove water ballast from the storage tank.

18 **DO NOT** use gaskets on covers of explosion-proof type boxes. The sealing compound found around wires at all junction box entrances is a requirement of the National Electrical Code and should not be disturbed. Ensure that the mating surfaces between the junction box and cover are free of dirt, debris, nicks, and scratches. Tighten the junction box covers before you replace panels.

19 **DO NOT** use knock-out boxes or flexible conduit to install this unit. All power and lighting wires should be run in threaded, rigid, metal conduit. All threaded connections must be drawn up tight with five (5) threads minimum engagement. Only one opening in the AC junction box is provided with a plug at the factory. When the installation is complete, it is the installer's responsibility to ensure that any unused openings are plugged.

Foundation

While constructing the pump island for the dispensing equipment, ensure that you extend the island excavation beyond the depth of the frost line. Leave some area open from the inside edge of the unit's base as shown on the specific base layout. Unless required by local regulations, do not cement the pipes and conduits into the island. The open area within the base will provide access for future servicing of the fittings, check valve and conduit assemblies. Fill in the boxed-in section with dry sand to keep condensation in the pump housing to a minimum and to help prevent fogging of the totalizer window.

Secure the pump/remote dispenser to the island using anchor bolts through the two mounting holes, which are 13 ” (330 mm) apart and indicated by an **X** on each base layout. If the dispensing unit is not securely fastened to the island, supply line leaks at unions and pipe joints may occur.

Two types of bolts can be used to anchor the pump to the island.

- Use two (2) 1/2” x 5” (13 mm x 125 mm) machine bolts embedded in the concrete ~OR~
- To meet minimum UL and API requirements for universal interchangeability of pumps, use two 1/2”x 3 1/2” (13 mm x 90 mm) lag screws with 2 ” (51 mm) expansion shields.

Suction Pump

The pump and the tank should be located close to each other with as few changes in the direction of the supply line, as possible. This reduces the possibility of vaporization (gasoline only), attains the highest possible flow rate, and results in a lower installation cost. Avoid long supply lines and excessive vertical lifts. The dynamic lift for this unit is rated at 12 feet (4m) for gasoline and 13 feet (4m) for diesel and can vary according to conditions of the installation and fuel temperature.

If a pump is to be used with an aboveground tank, a pressure regulator valve is required on the suction side of the pump. Consult your Gasboy representative for details. The tank should be free of water and dirt. It is recommended that the tank be pressure tested, to verify it is liquid and vapor tight. This type of installation is not recommended for Models 9840Q, 9853QTW1M, 9840A, 9853AHC and 9853ATW1M. Consult your Gasboy representative for details.

If a 9850A pump is to be used with an above-ground tank, a special solenoid valve arrangement is required on the suction side of the pump. In addition, to protect the solenoid valve, install a strainer or filter upstream, and as close to the valve as possible. Consult your Gasboy representative for details.

Note: The outlet fitting at the top of the float chamber should be connected to drain back to the storage tank. The pipe size for the return line to the storage tank should be at least 3/8” (10 mm).

Remote Dispenser

Place the remote dispenser and the tank with submersible pump as close to each other as possible to attain minimum possible pressure drop and the highest possible flow rate, consistent with the pump capacity. Consult the submersible pump manufacturer's recommendations for pipe sizing and installation instructions pertaining to the particular model of the submersible pump being installed.

A listed emergency shut-off valve (OPW 10RUS or equal) must be installed under each remote dispenser with the shear groove at the same level as the top of the concrete island + 1/2 ” (13 mm). The shear valve should be rigidly supported to ensure proper shearing and closure of the valve in the event the remote dispenser is dislodged. According to the type of shear valve, a different supply nipple may be required.

CAUTION

If a shear valve has operated on an emergency basis during a fire or mechanical shock, or if it does not operate correctly when inspected, repairs must be made before putting the remote dispenser into service.

It is a requirement of the Flammable and Combustible Liquids Code that a leak detector be installed in the system to prevent underground leaks from being undetected.

Supply Line

Use new galvanized or fiberglass (see note) pipe, that has a minimum diameter of 1-1/2 ” (38 mm). When installing a 9840A, 9840Q, 9840QX, 9850A, 9840AX, or 9850AX model, use a supply pipe that has a minimum diameter of 2 ” (51 mm) to obtain the highest possible flow rate and to reduce the possibility of vaporization (gasoline only).

Note: Fiberglass pipe is to be installed as per manufacturer's specifications and requirements.

Ensure both the pipe and the tank are clean. Foreign matter entering the pump can cause extensive damage. Obstructions in the supply line can create pump problems and reduced flow rate.

Ensure that all pipe threads are properly cut, and the inside reamed to remove burrs. Use listed gasoline-resistant compound on all joints of gasoline handling piping. Sealing compound must also be resistant to Gasohol (Ethanol and Methanol). Do not use Teflon® Pipe Sealing Tape. Use gasoline-resistant pipe compound only on male threads; pipe compound used on female threads can be squeezed into the supply line where it can enter the product stream and become lodged in the pump or meter. Install swing joints under the pump and at the tank to avoid breaks in the supply line from settling or frost heave.

To avoid product delivery problems on suction pumps, ensure that there are no traps in the supply line. Supply lines, for both suction pumps and submersible pumps, should go straight down beneath the pump to a point 18 ” (46 cm) below the ground level and pitch at a rate of 1/8 ” (3 mm) per foot (.305 m) from there down to the storage tank. The supply line should be as short and direct as possible with swing joints at all turns. Support the horizontal run of pipe at 10-foot (3.05 m) intervals to maintain pitch and prevent traps. Do not use wood as pipe supports.

New EPA regulations require that only one check valve be used per supply line and located directly below, and as close as practical to the suction pump. Do not use spring-loaded or union check valves since these will unnecessarily reduce the flow rate and contribute to the reduction of atmospheric pressure necessary to keep gasoline in a liquid state.

CAUTION

Upon completion of the installation, all liquid-carrying lines must be checked for leaks.

Nozzle, Hose, and Accessories

This unit is normally used with a UL-listed interchangeable service station type nozzle. Units equipped with suffix N are used with a UL-listed Richards Mark XIIL nozzle. Only UL-listed hose assemblies and accessories are to be used with this device. A listed breakaway connector must be installed on all hose assemblies.

Series 9800A Single Pump/Remote Dispenser Dimensions

Figure 1: Series 9800A Single Pump/Remote Dispenser Dimensions

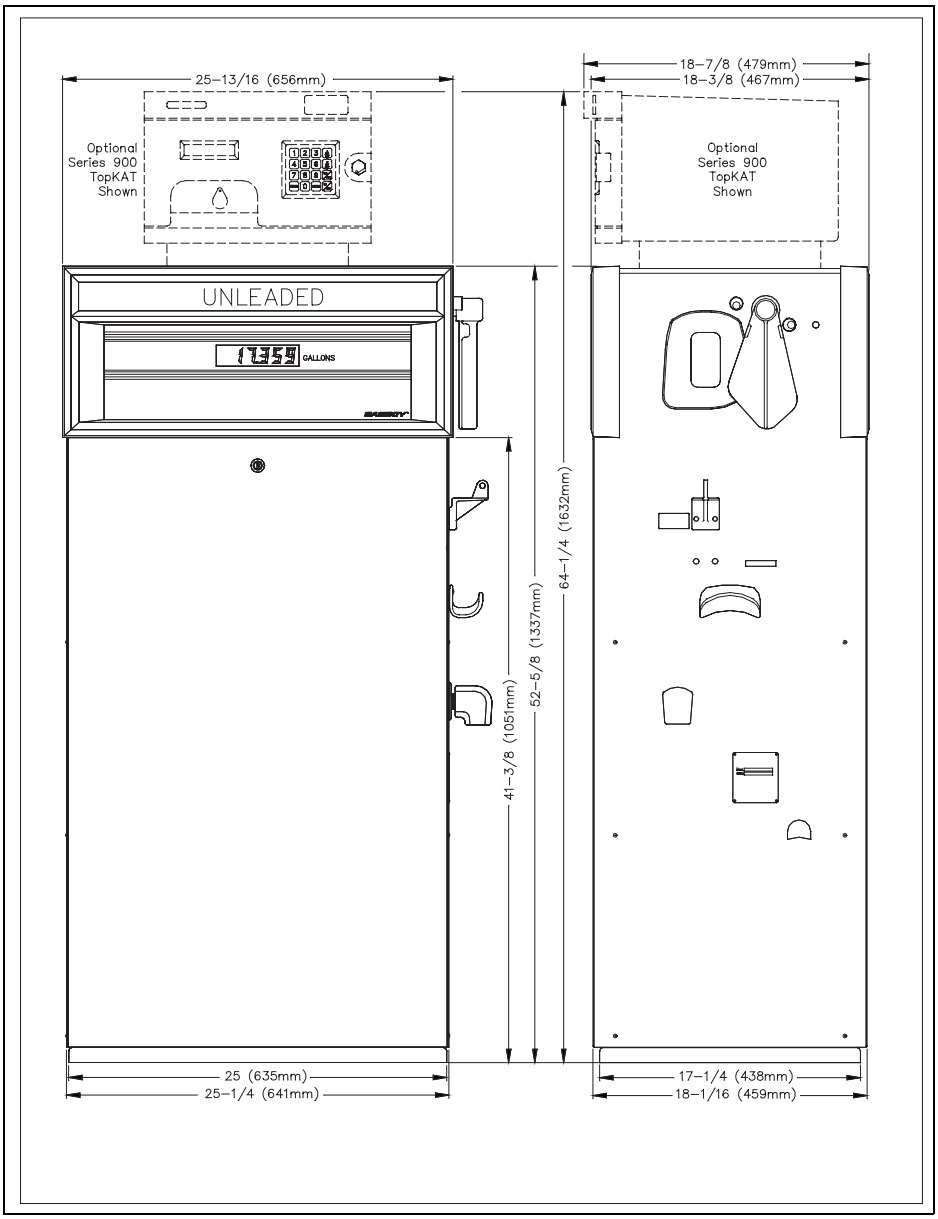

Note: The 9840A and 9840AX models are single pumping units. However, they are housed in a twin cabinet. Use the dimensions shown for a twin pump/dispenser.

Series 9800A Twin Pump/Remote Dispenser Dimensions

Figure 2: Series 9800A Twin Pump/Remote Dispenser Dimensions

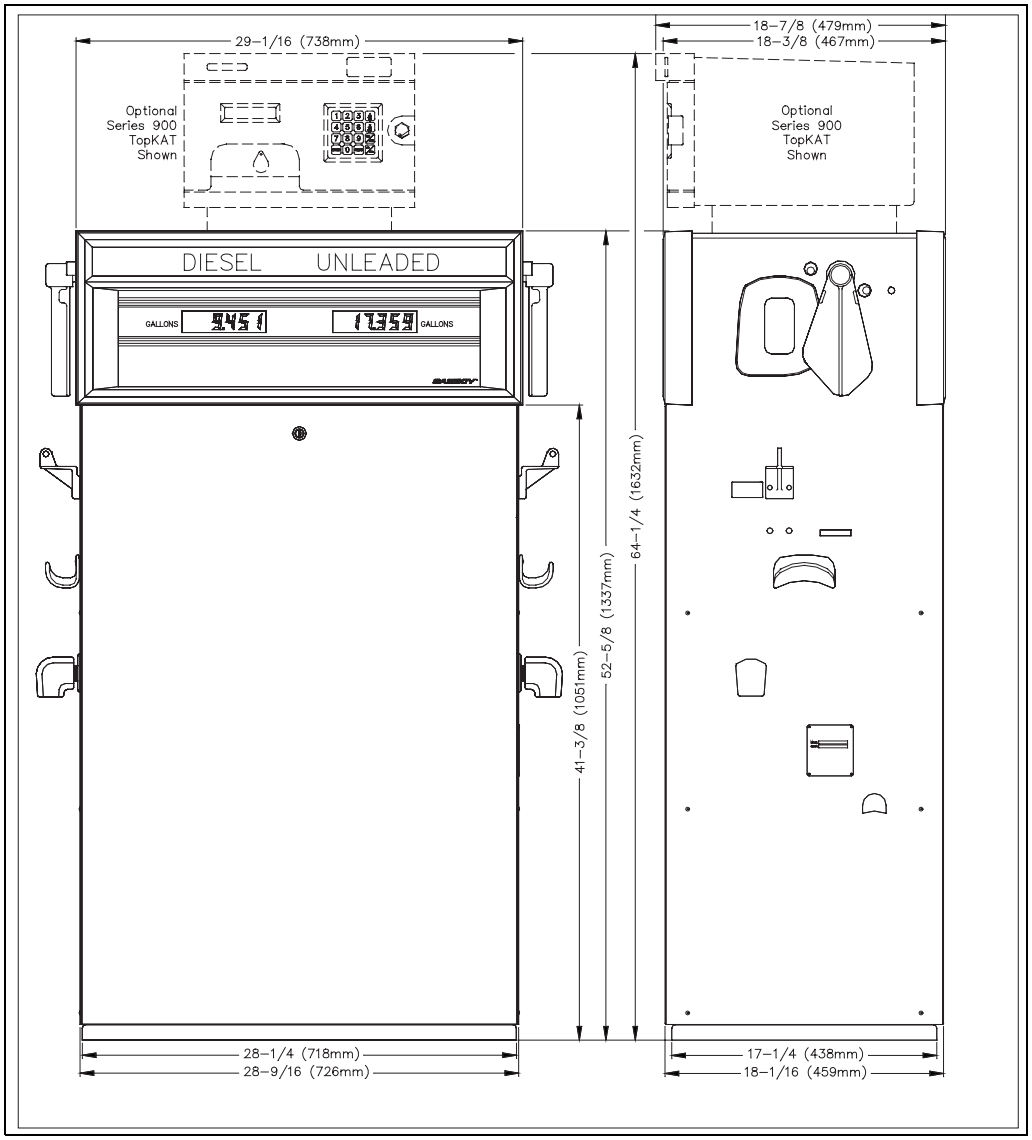

Series 9800Q Single/Twin Pump/Remote Dispenser Dimensions

Figure 3: Series 9800Q Single/Twin Pump/Remote Dispenser Dimensions

Note: The unit shown is a twin unit.

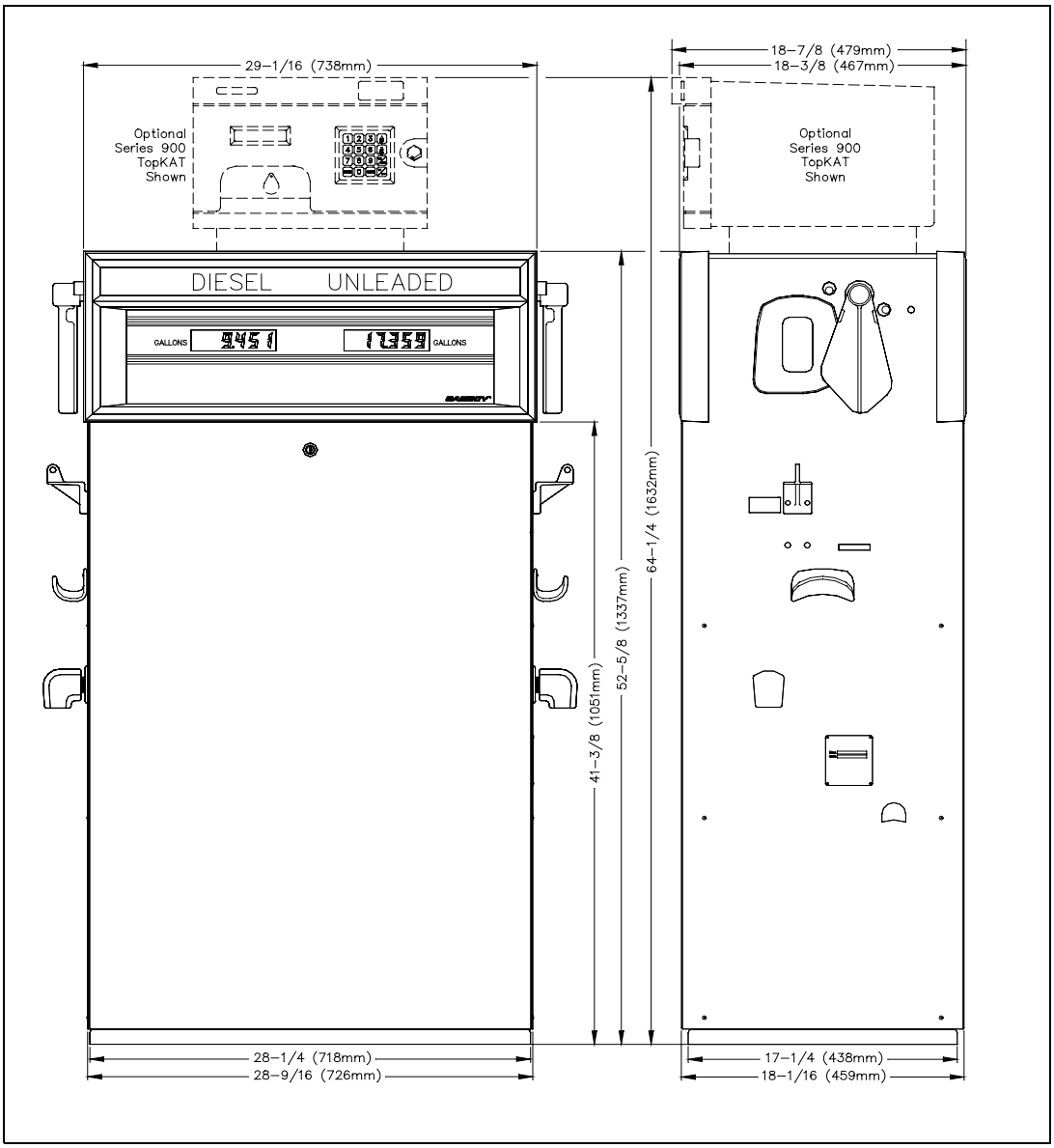

Series 9800A Single Pump/Remote Dispenser Front Load Nozzle Dimensions

Figure 4: Series 9800A Single Pump/Remote Dispenser Front Load Nozzle Dimensions

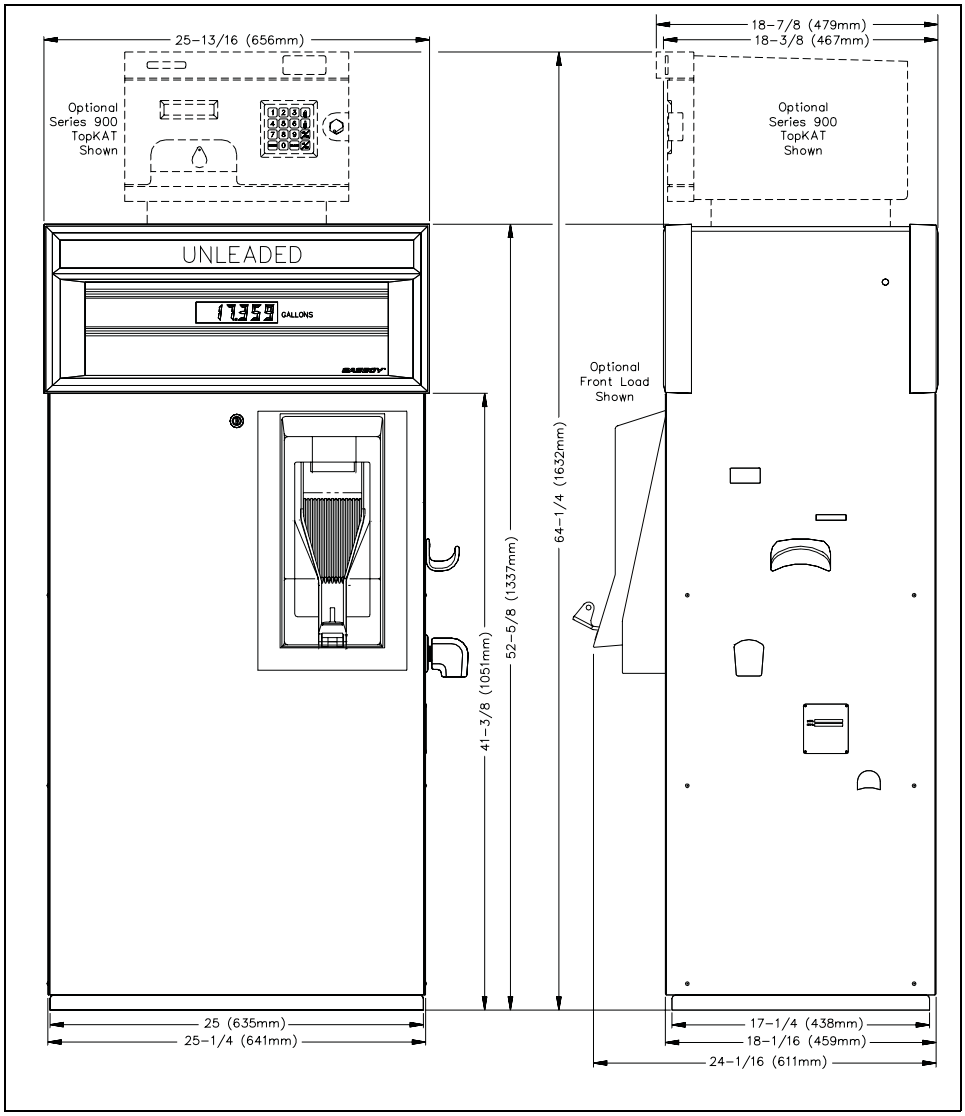

Series 9800Q Single/Twin Pump/Remote Dispenser Front Load Nozzle Dimensions

Figure 5: Series 9800Q Single/Twin Pump/Remote Dispenser Front Load Nozzle Dimensions

Note: The unit shown is a front load twin unit.

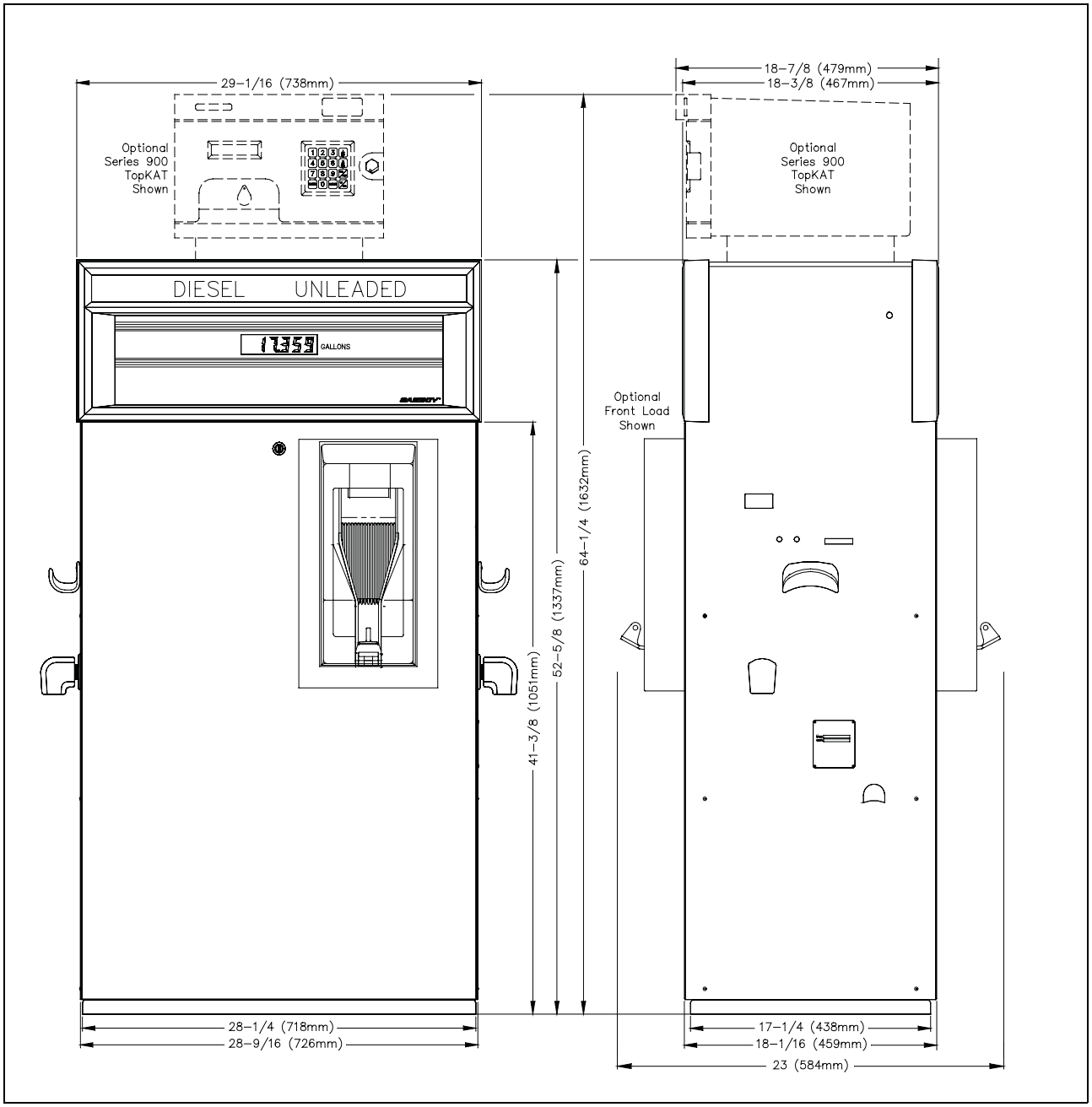

Series 9800A Twin Pump/Remote Dispenser Front Load Nozzle Dimensions

Figure 6: Series 9800A Twin Pump/Remote Dispenser Front Load Nozzle Dimensions

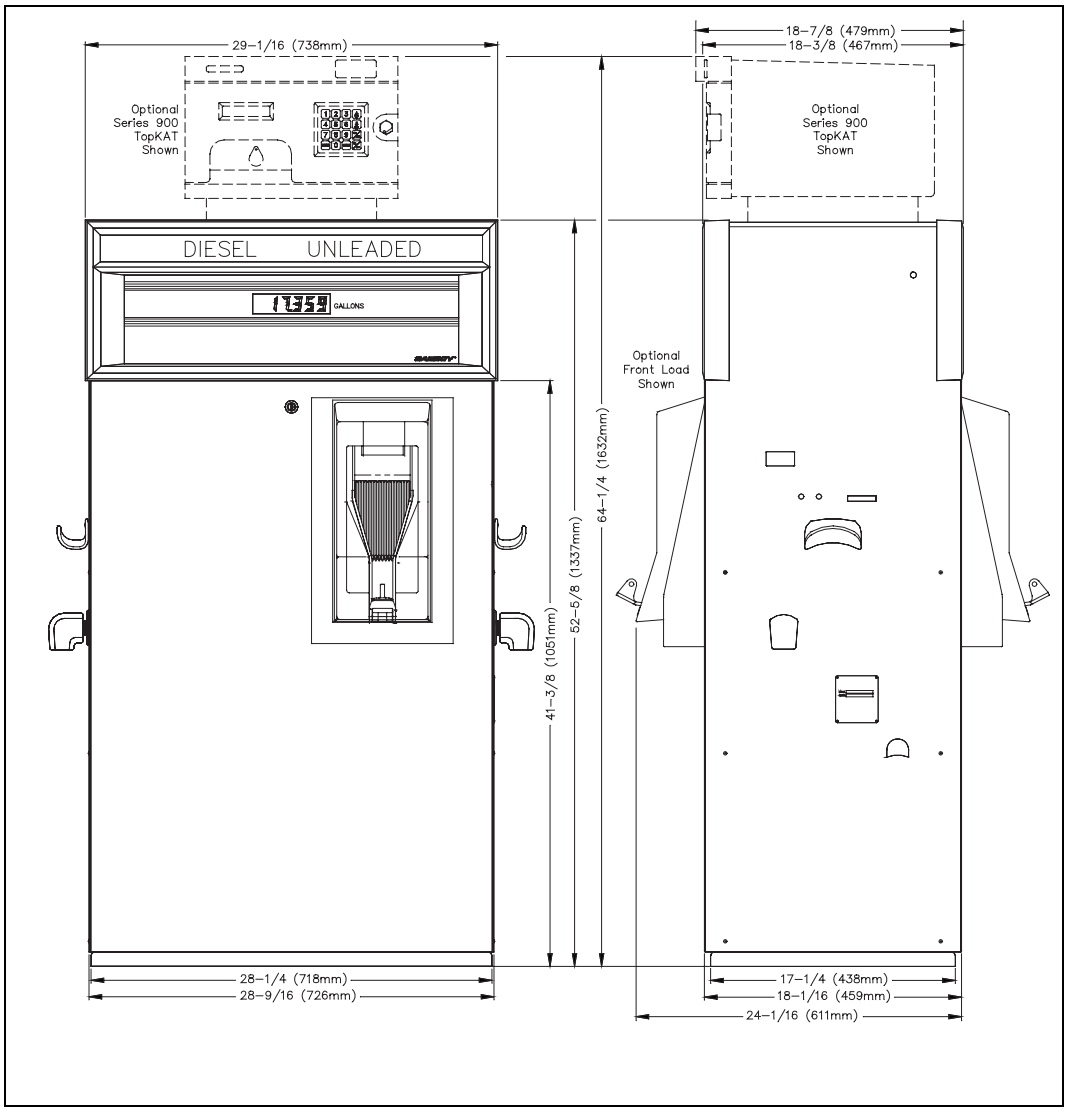

011865 Base Layout Models 9853AHC

Figure 7: 011865 Base Layout Models 9853AHC

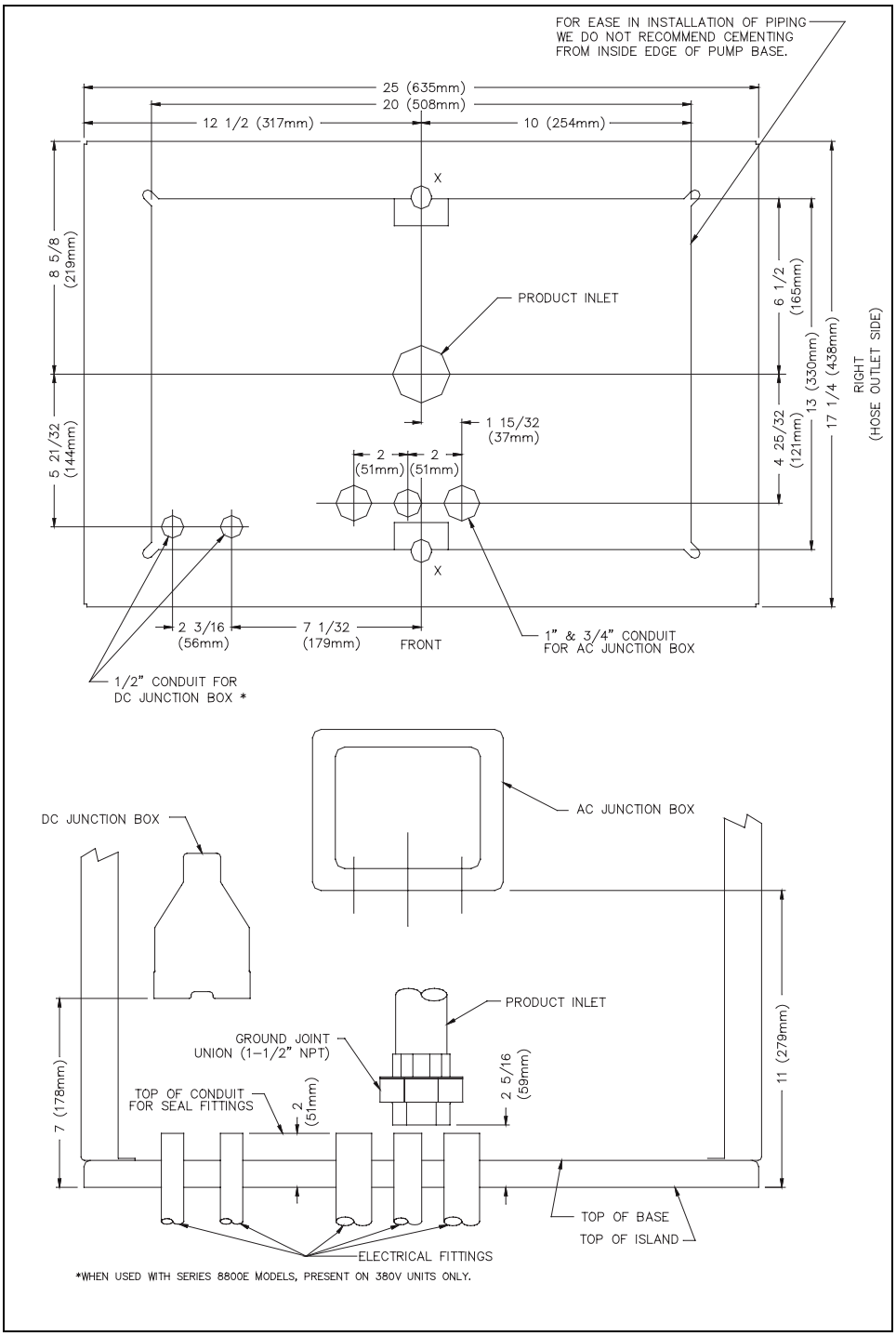

011887 Base Layout Models 9852ATW2, 9853ATW2

Figure 8: 011887 Base Layout Models 9852ATW2, 9853ATW2

Note: See "011983 Base Layout Models 9853ATW2 380V" on page 35, for 380VAC base layout.

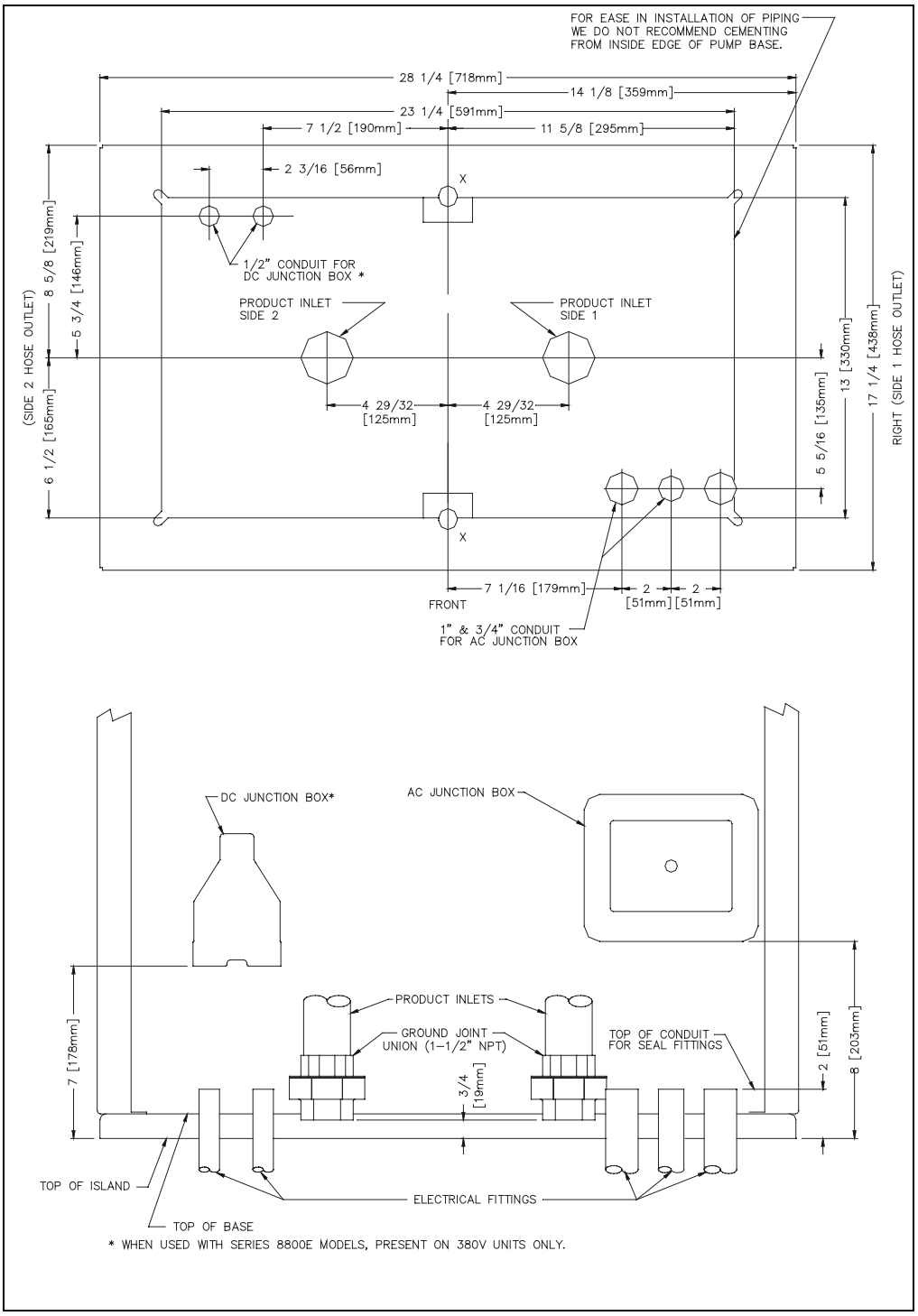

011888 Base Layout Model 9853ATW1M

Figure 9: 011888 Base Layout Model 9853ATW1M

Note: See "011984 Base Layout Models 9853ATW1M 380V" on page 36, for 380VAC base layout.

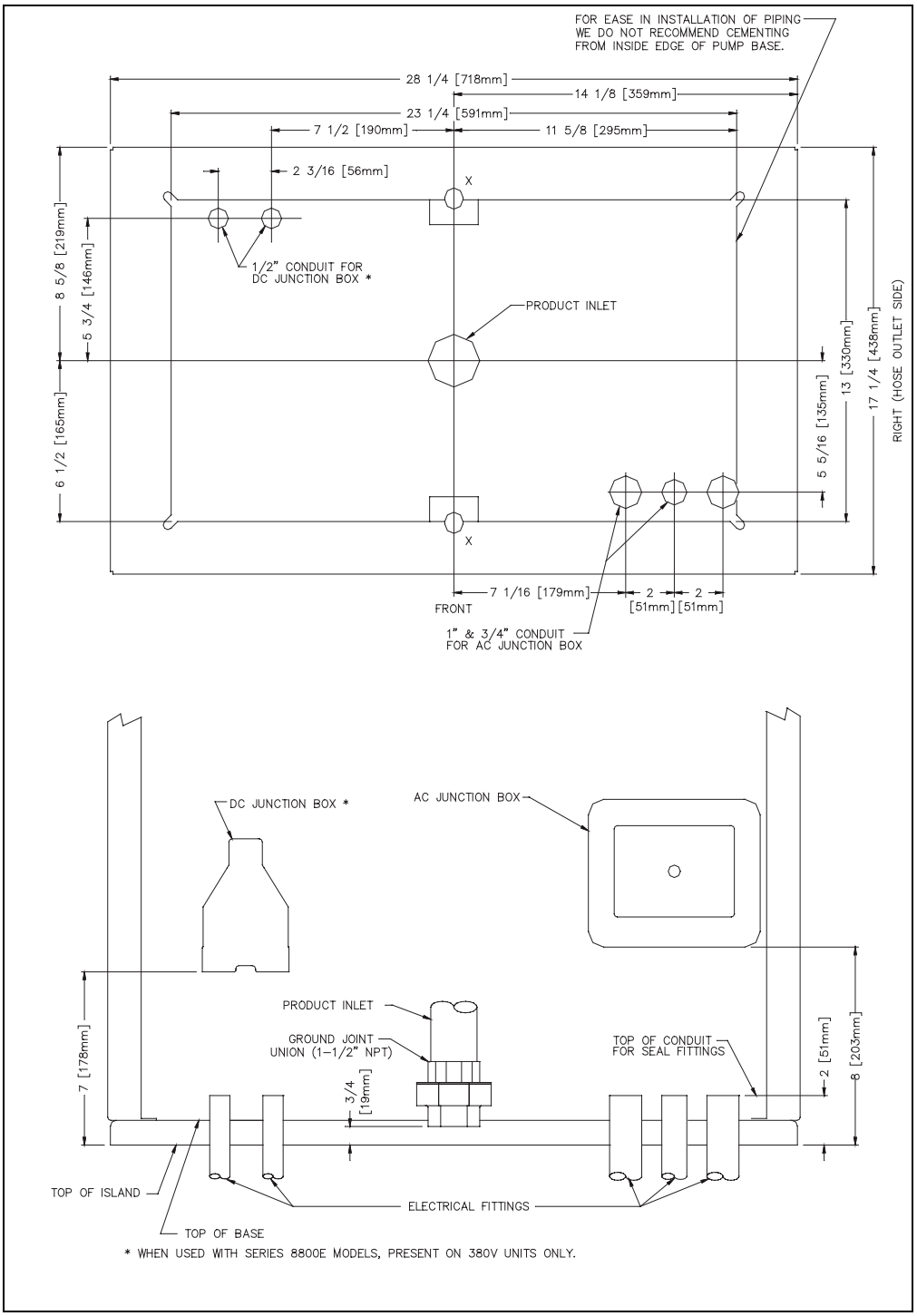

011892 Base Layout Models 9852A, 9853A

Figure 10: 011892 Base Layout Models 9852A, 9853A

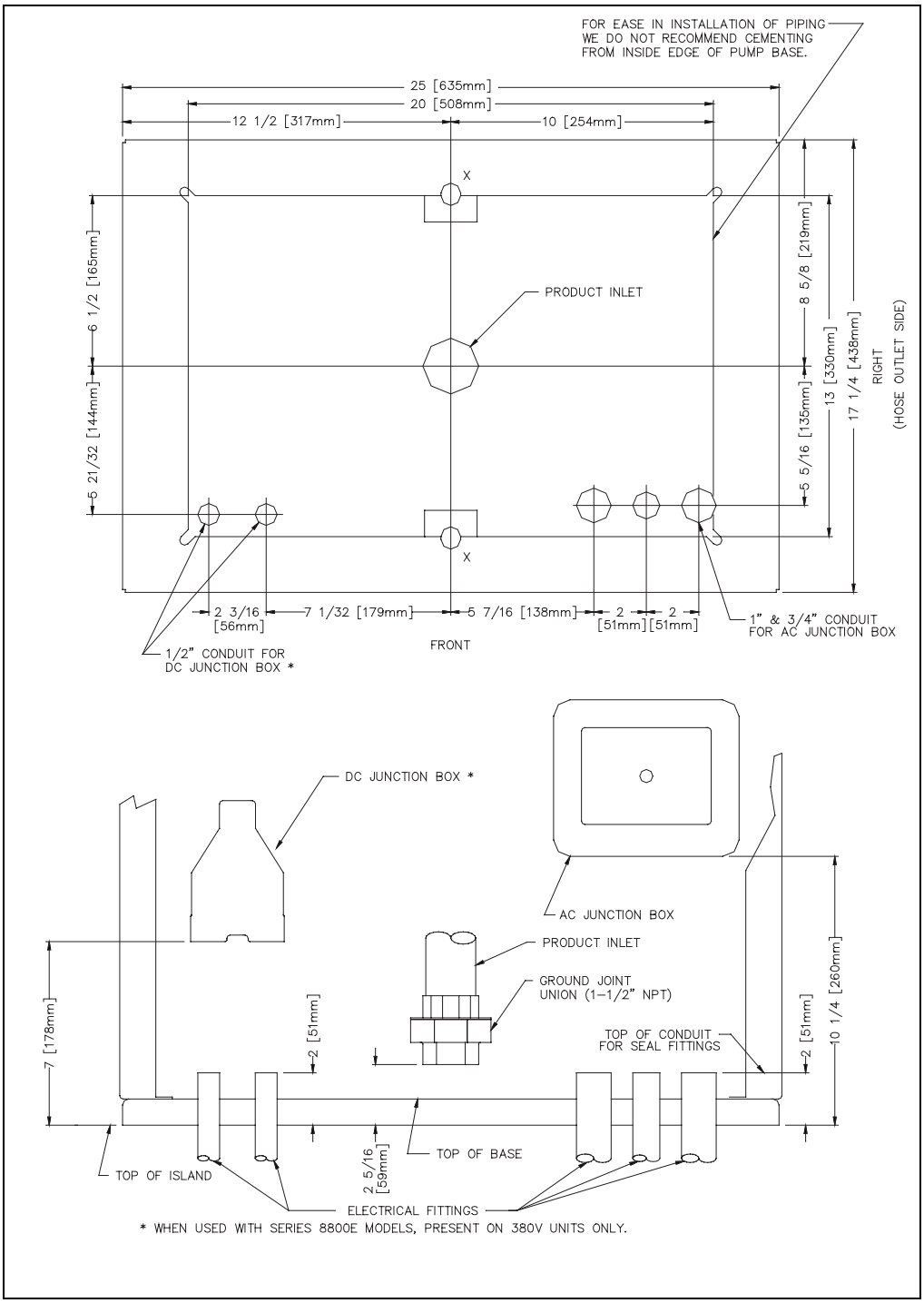

011897 Base Layout Model 9840A

Figure 11: 011897 Base Layout Model 9840A

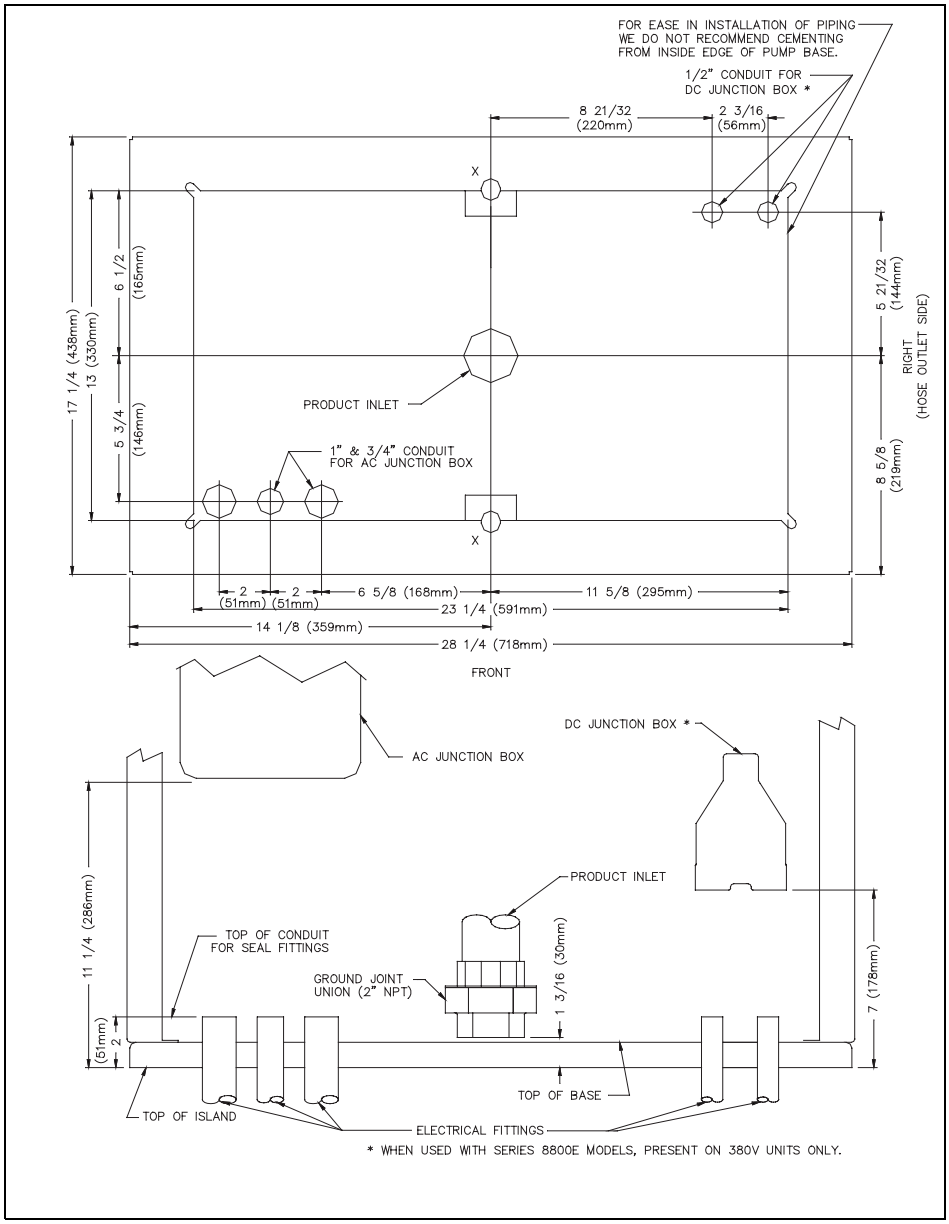

011898 Base Layout Model 9840AX

Figure 12: 011898 Base Layout Model 9840AX

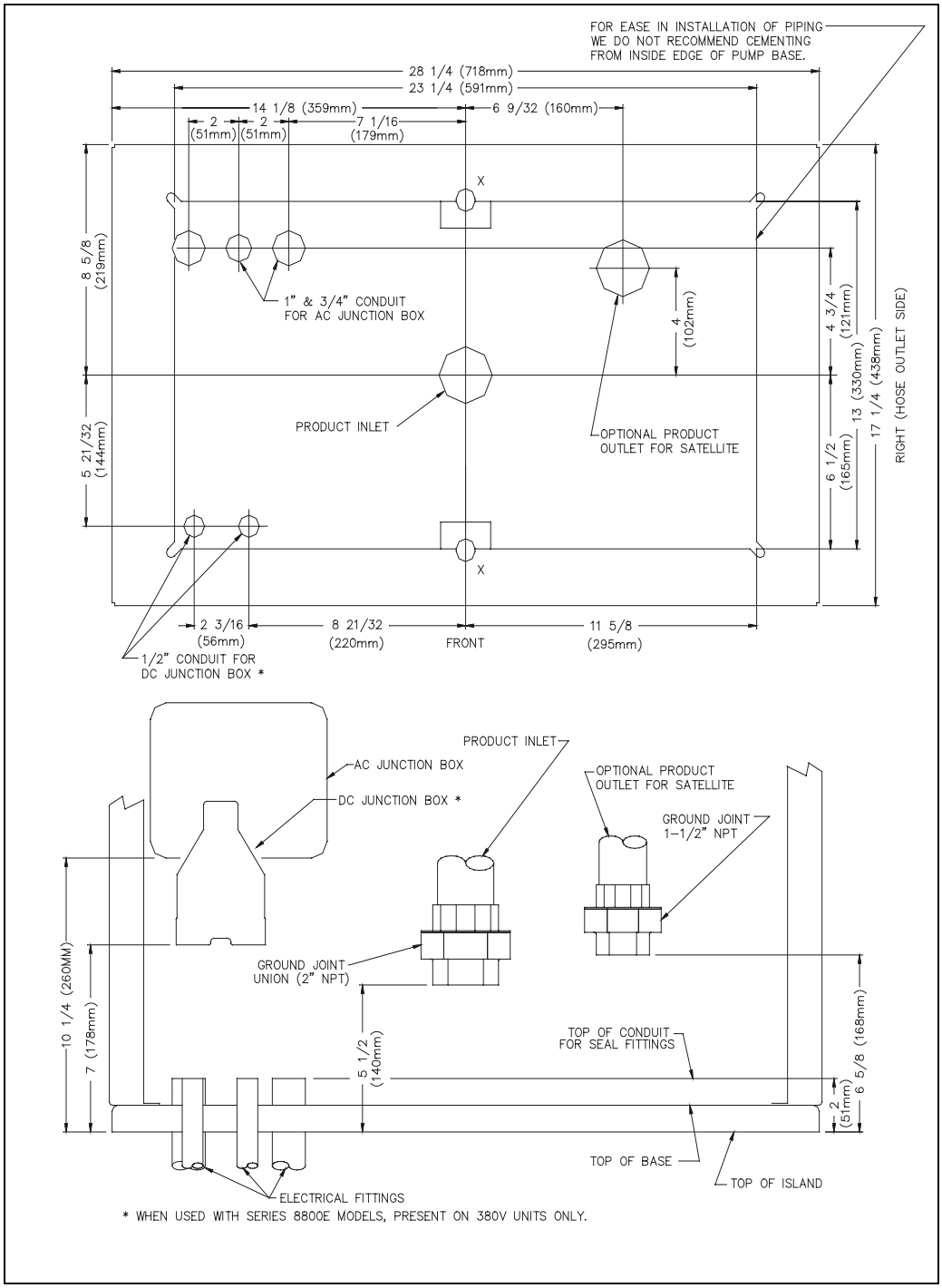

011971 Base Layout Models 9852AX, 9853AX

Figure 13: 011971 Base Layout Models 9852AX, 9853AX

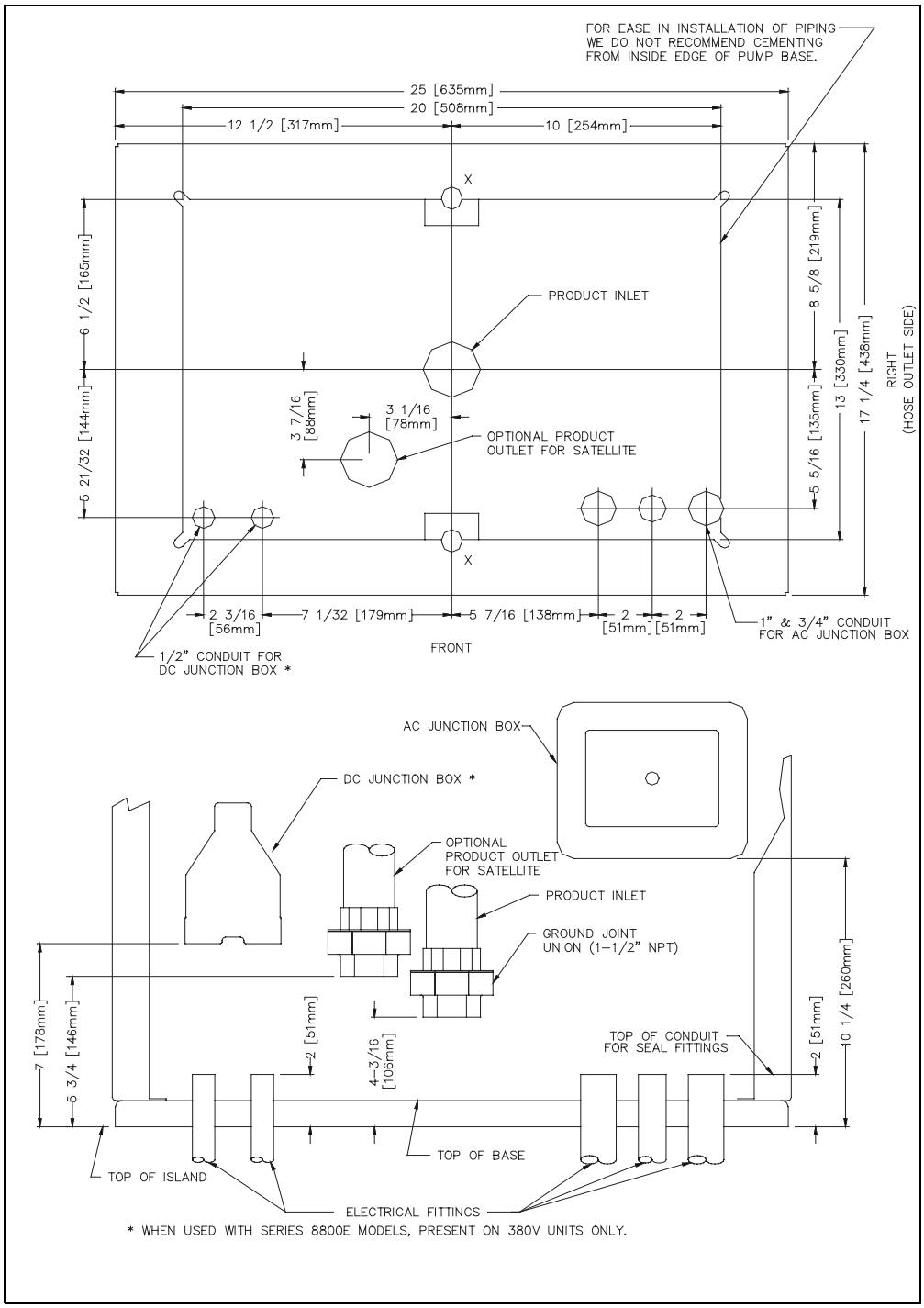

011973 Base Layout Models 9850A

Figure 14: 011973 Base Layout Models 9850A

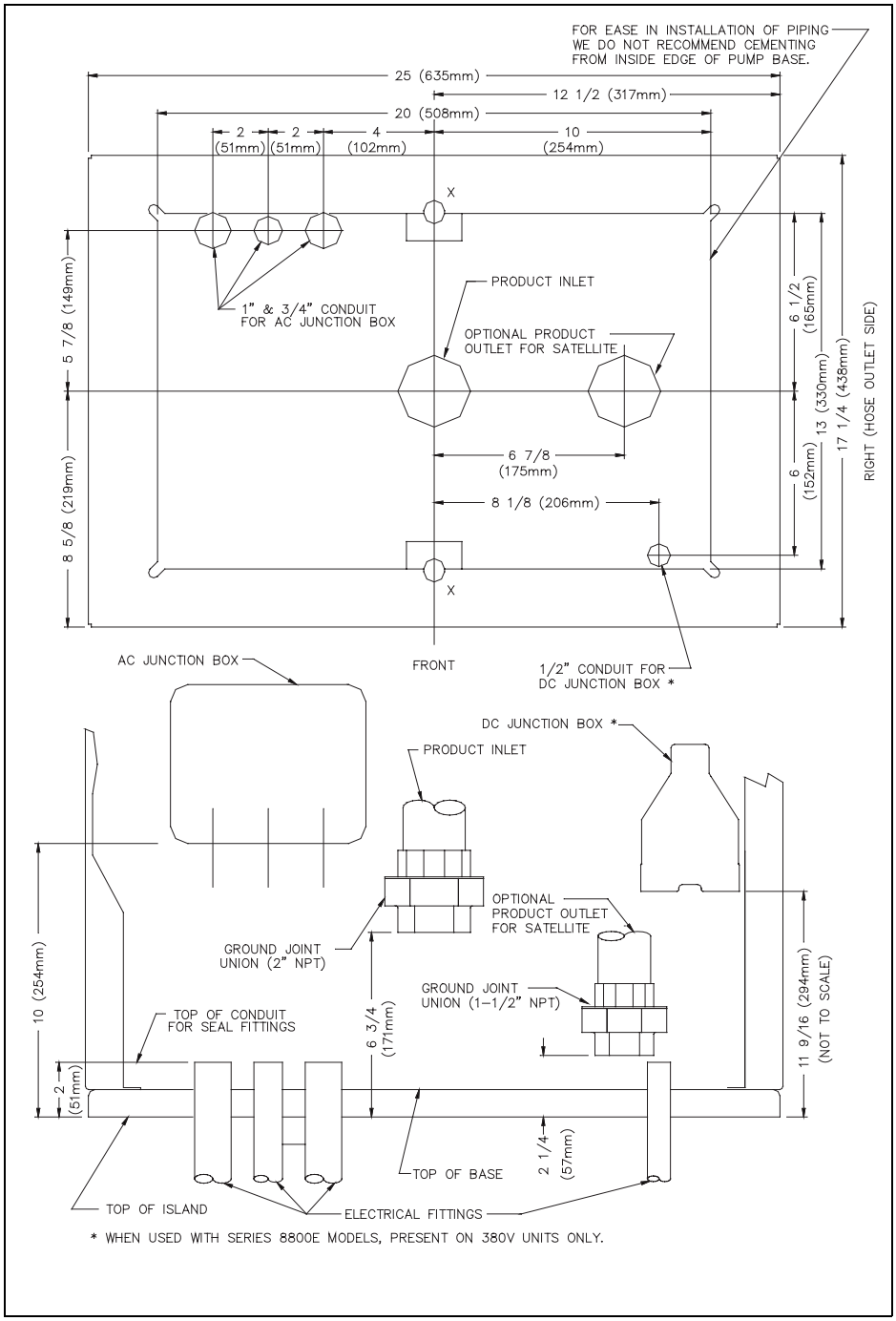

011974 Base Layout Models 9850AX

Figure 15: 011974 Base Layout Models 9850AX

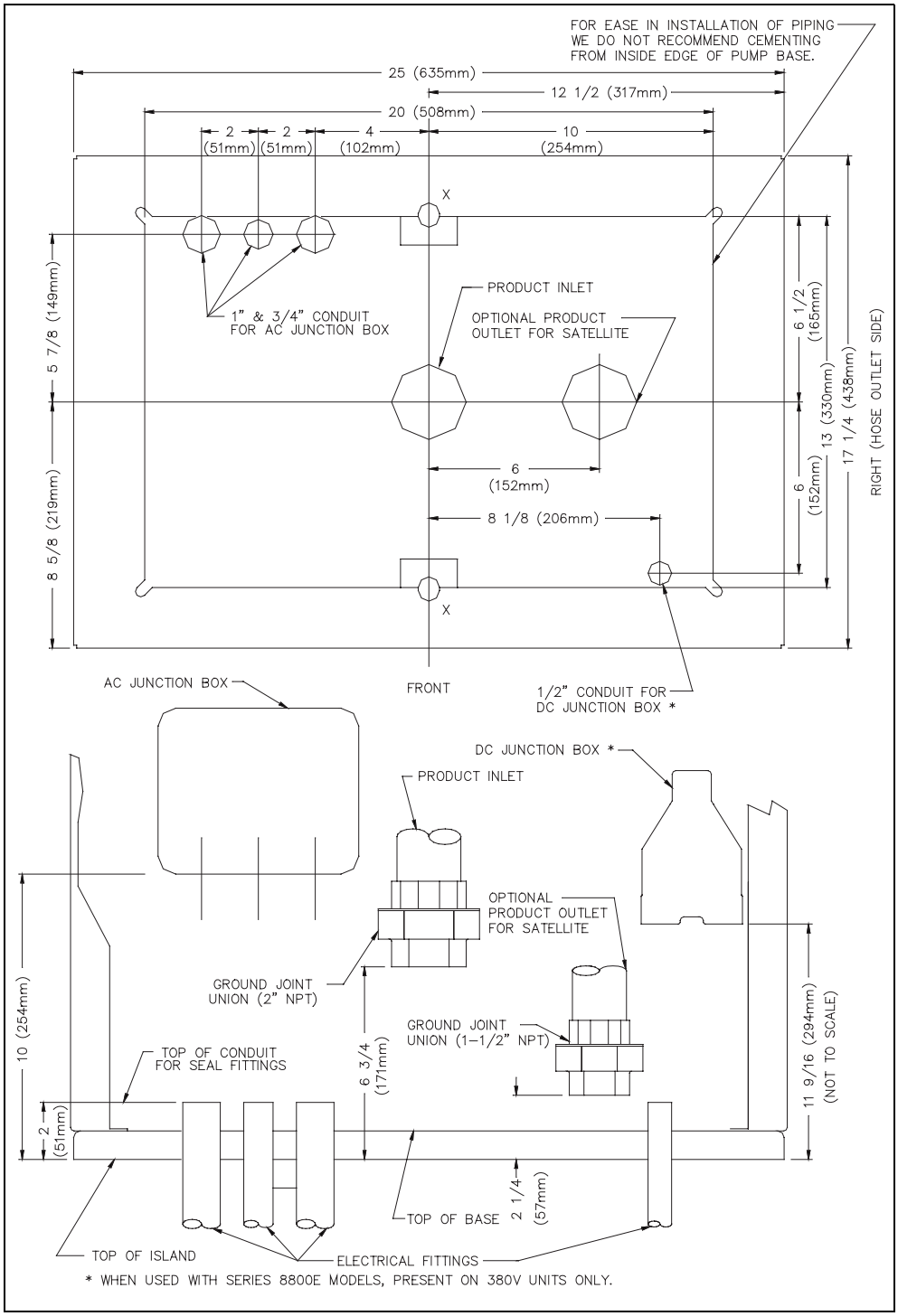

011976 Base Layout Models 9852ATW1

Figure 16: 011976 Base Layout Models 9852ATW1

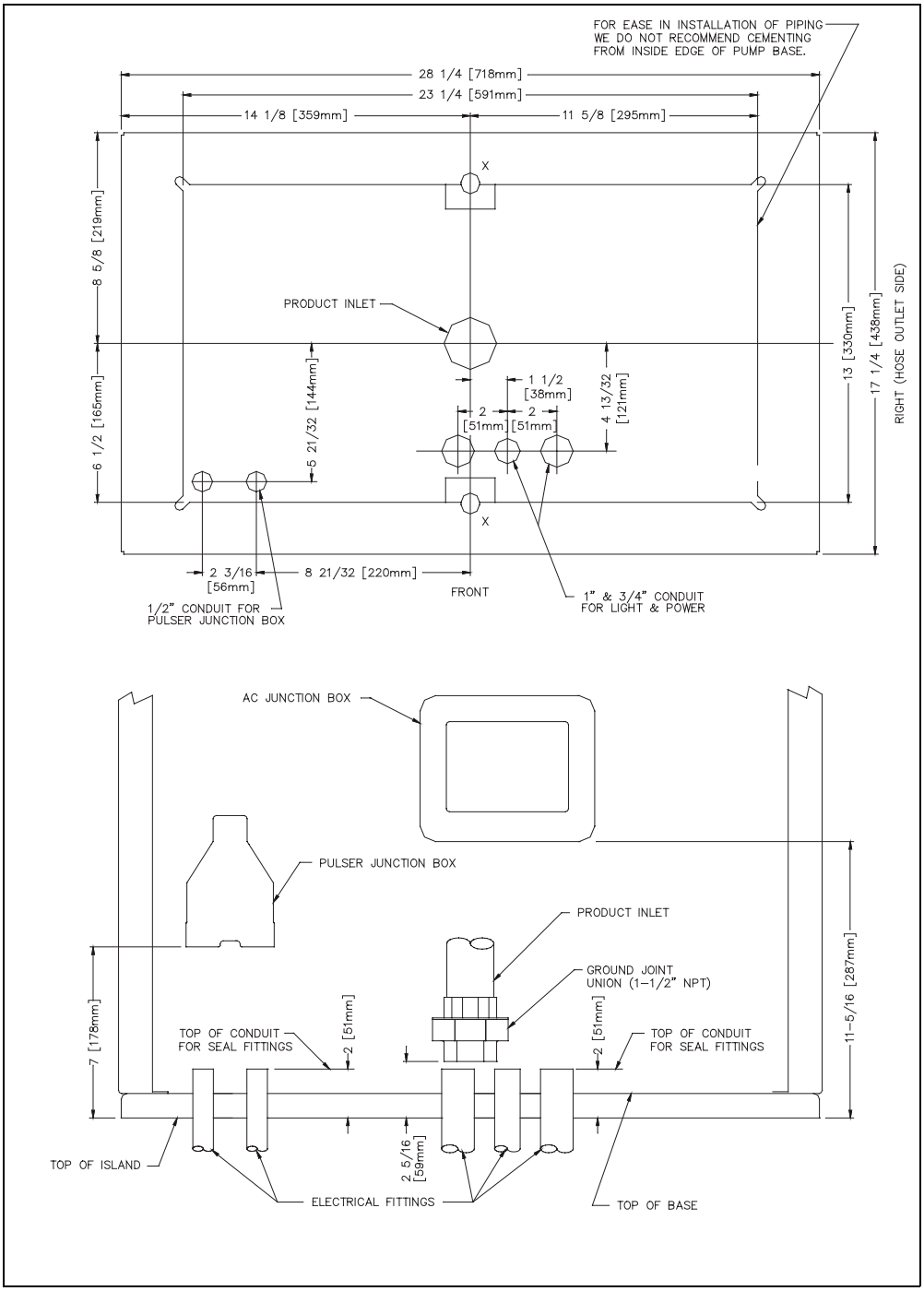

011977 Base Layout Models 9852AXTW2, 9853AXTW2

Figure 17: 011977 Base Layout Models 9852AXTW2, 9853AXTW2

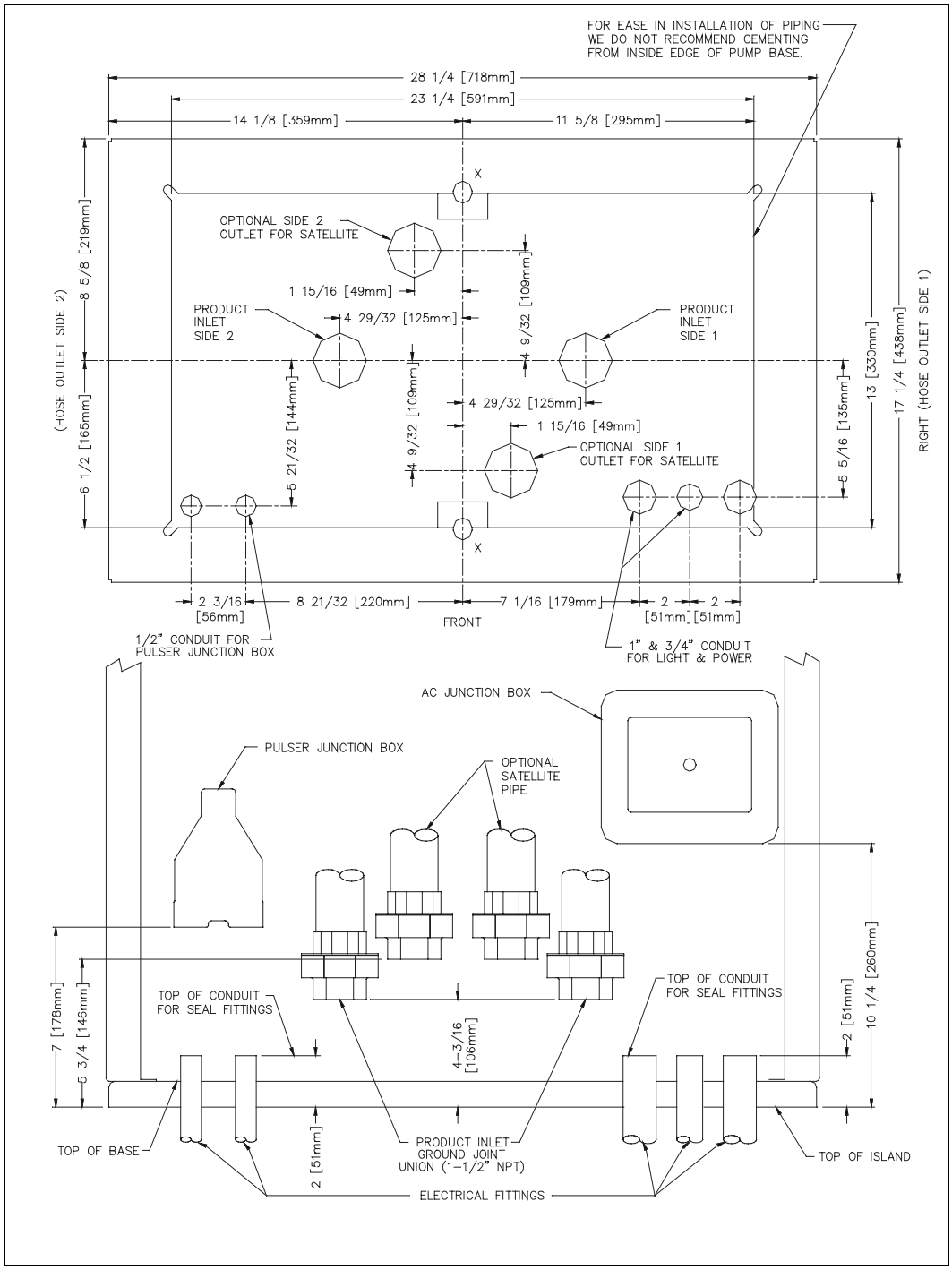

011978 Base Layout Models 9852AXTW1, 9853AXTW1

Figure 18: 011978 Base Layout Models 9852AXTW1, 9853AXTW1

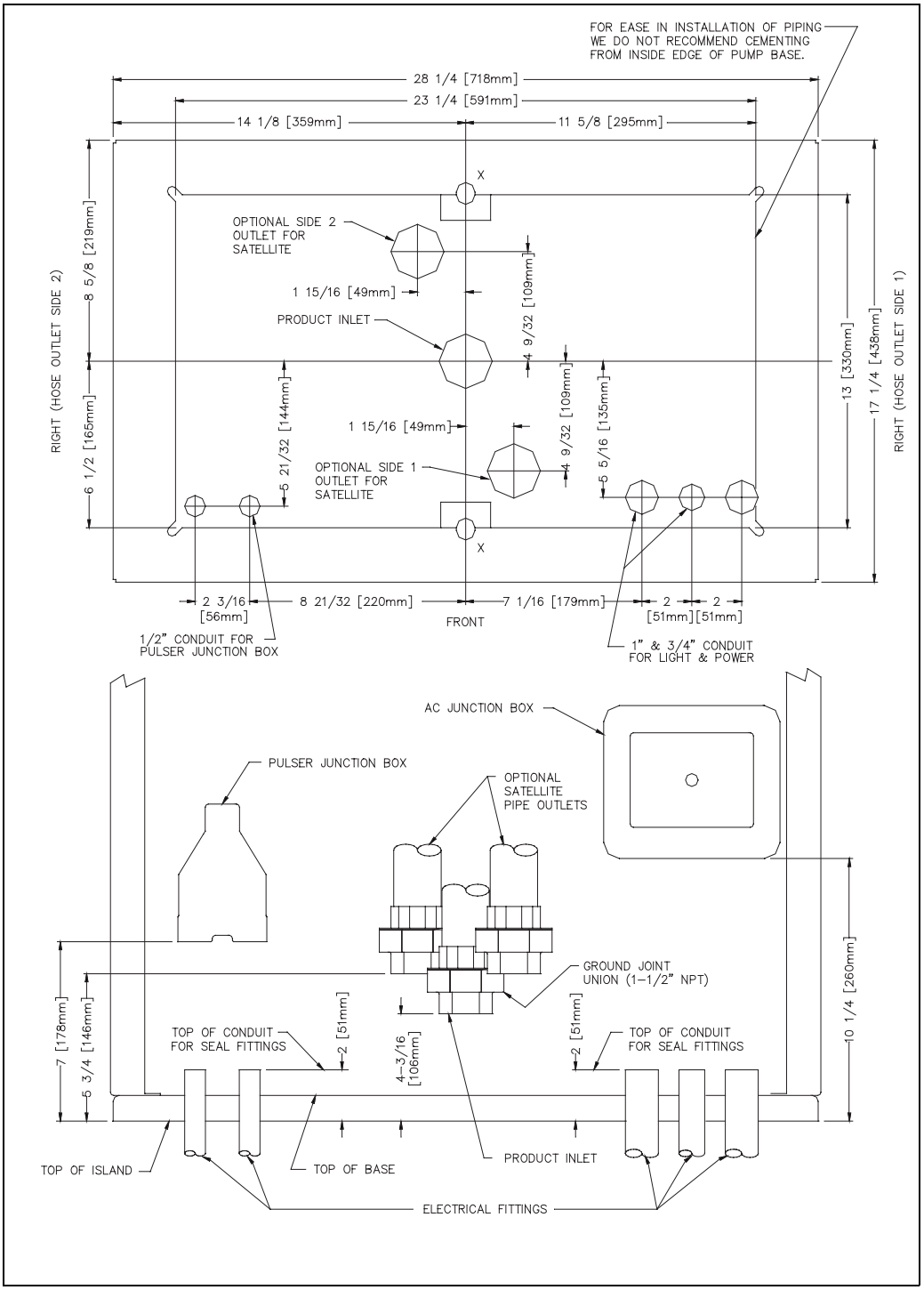

011979 Base Layout Models 9850AXTW1

Figure 19: 011979 Base Layout Models 9850AXTW1

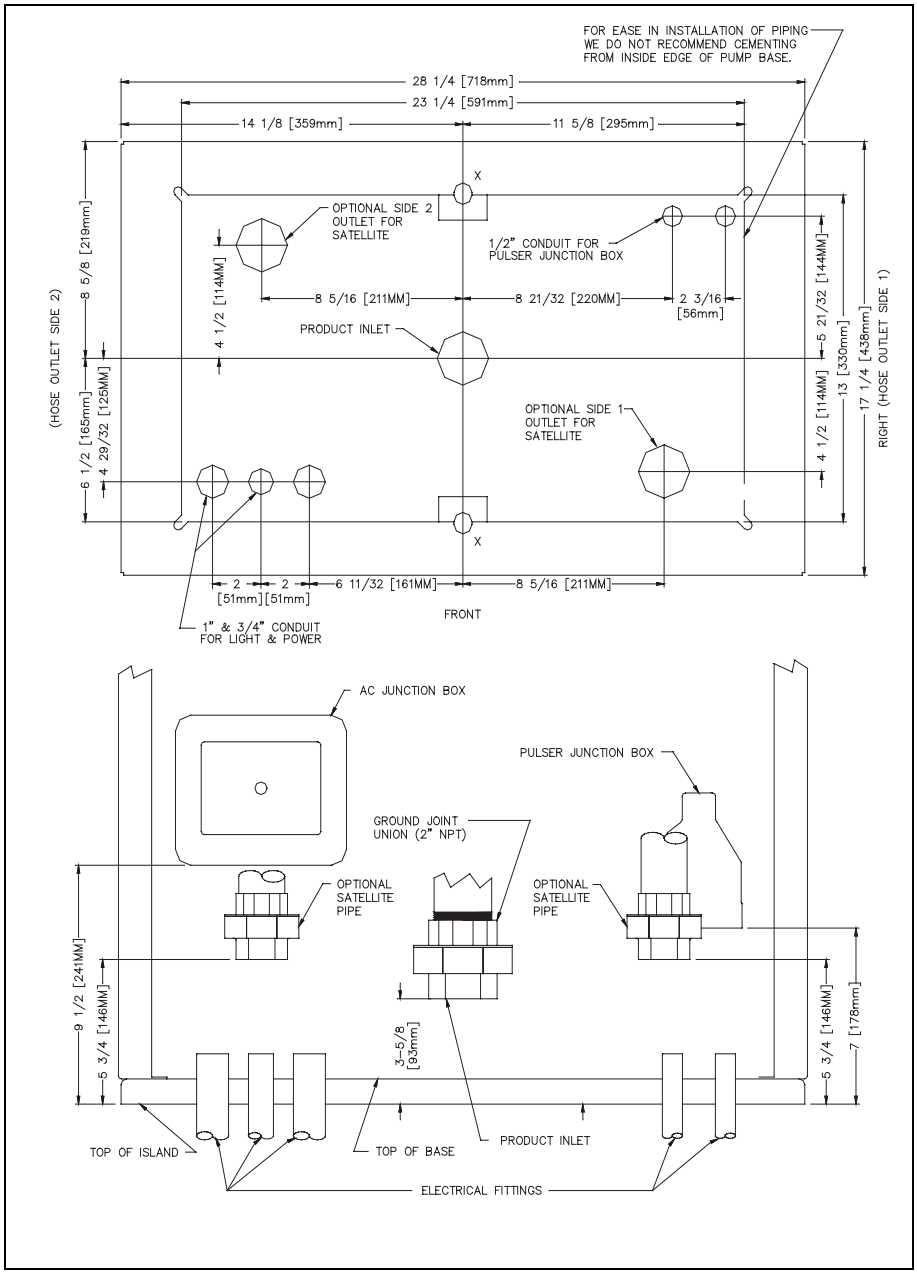

011980 Base Layout Models 9850AXTW2

Figure 20: 011980 Base Layout Models 9850AXTW2

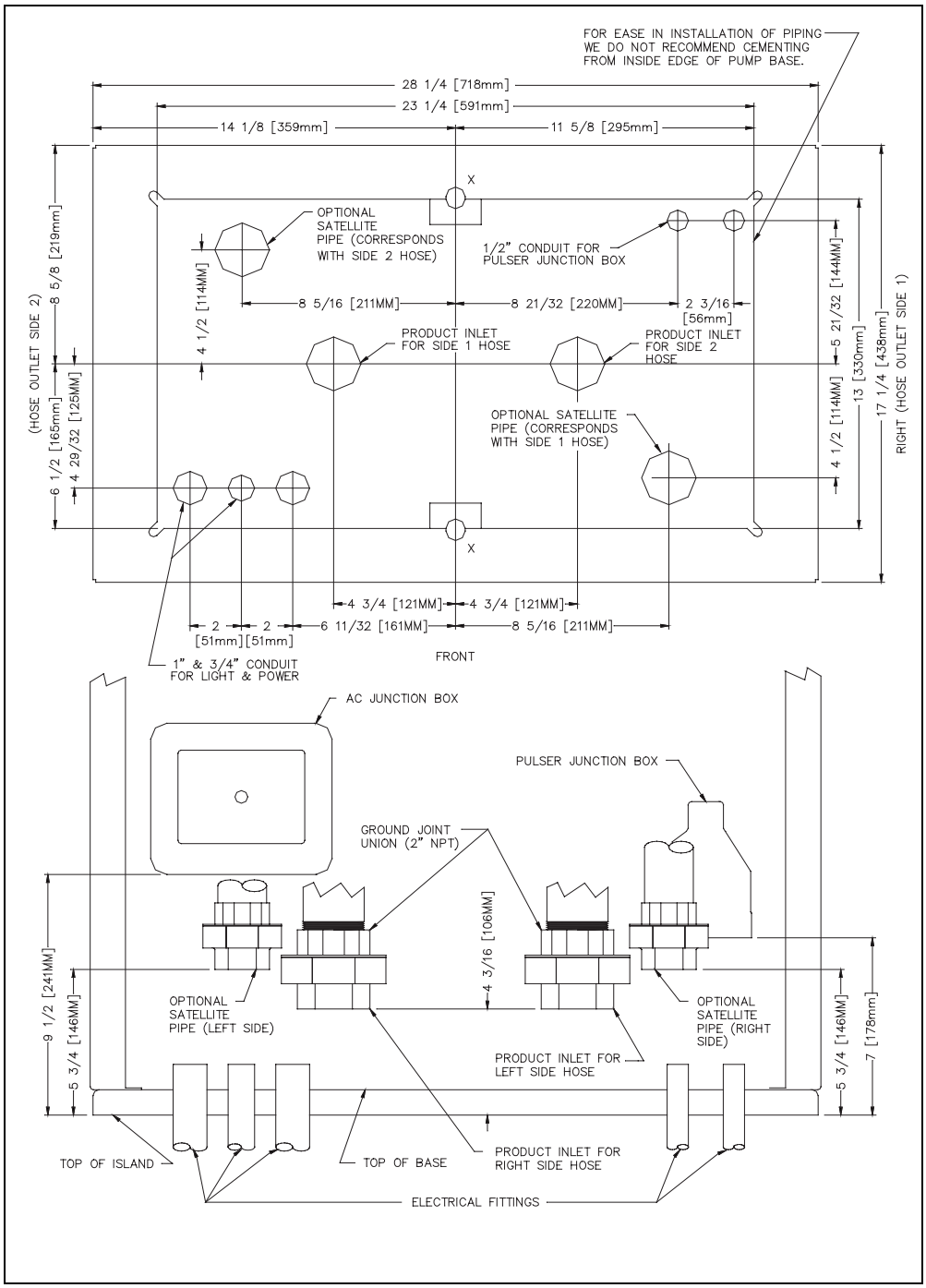

011983 Base Layout Models 9853ATW2 380V

Figure 21: 011983 Base Layout Models 9853ATW2 380V

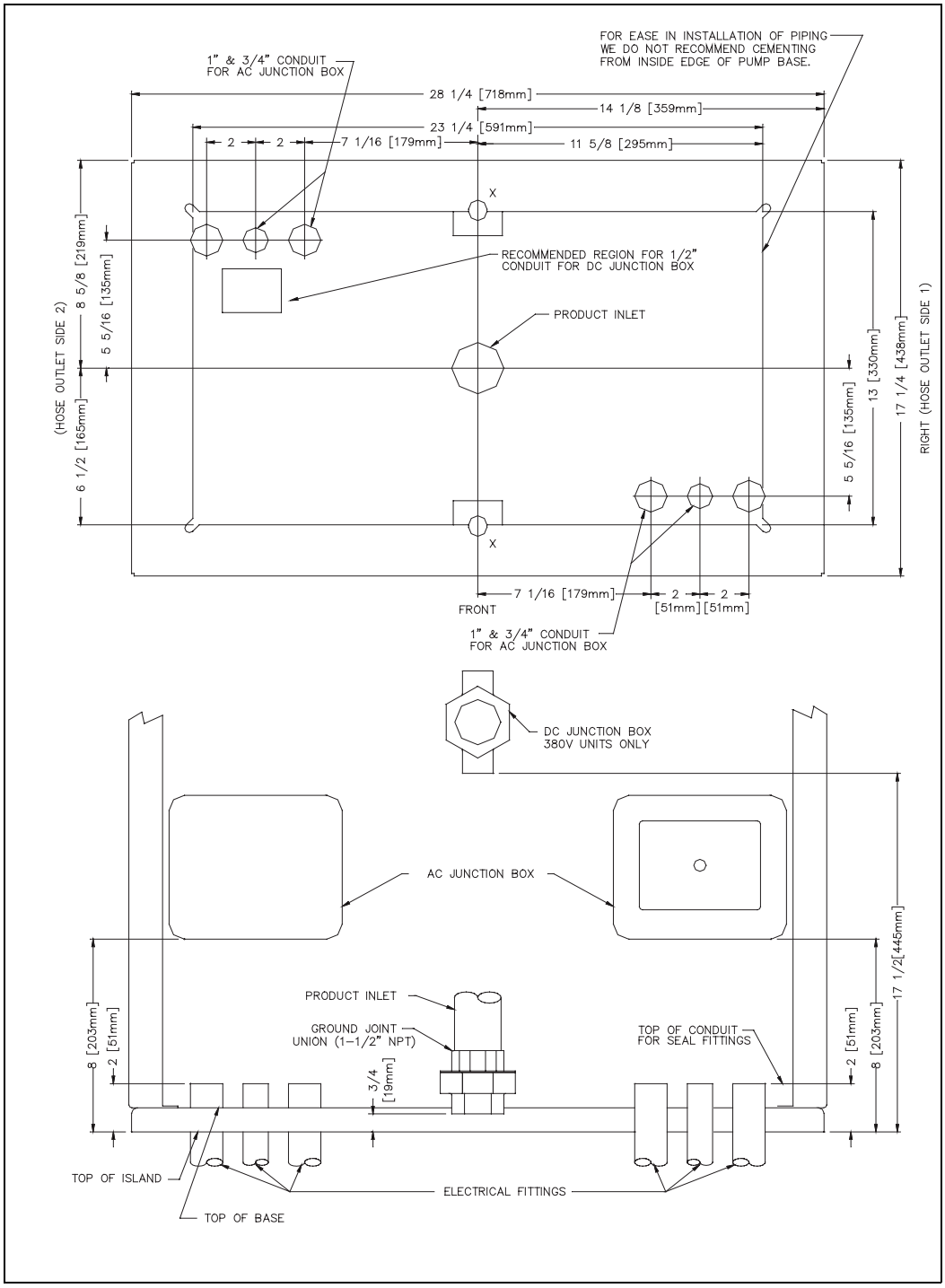

011984 Base Layout Models 9853ATW1M 380V

Figure 22: 011984 Base Layout Models 9853ATW1M 380V

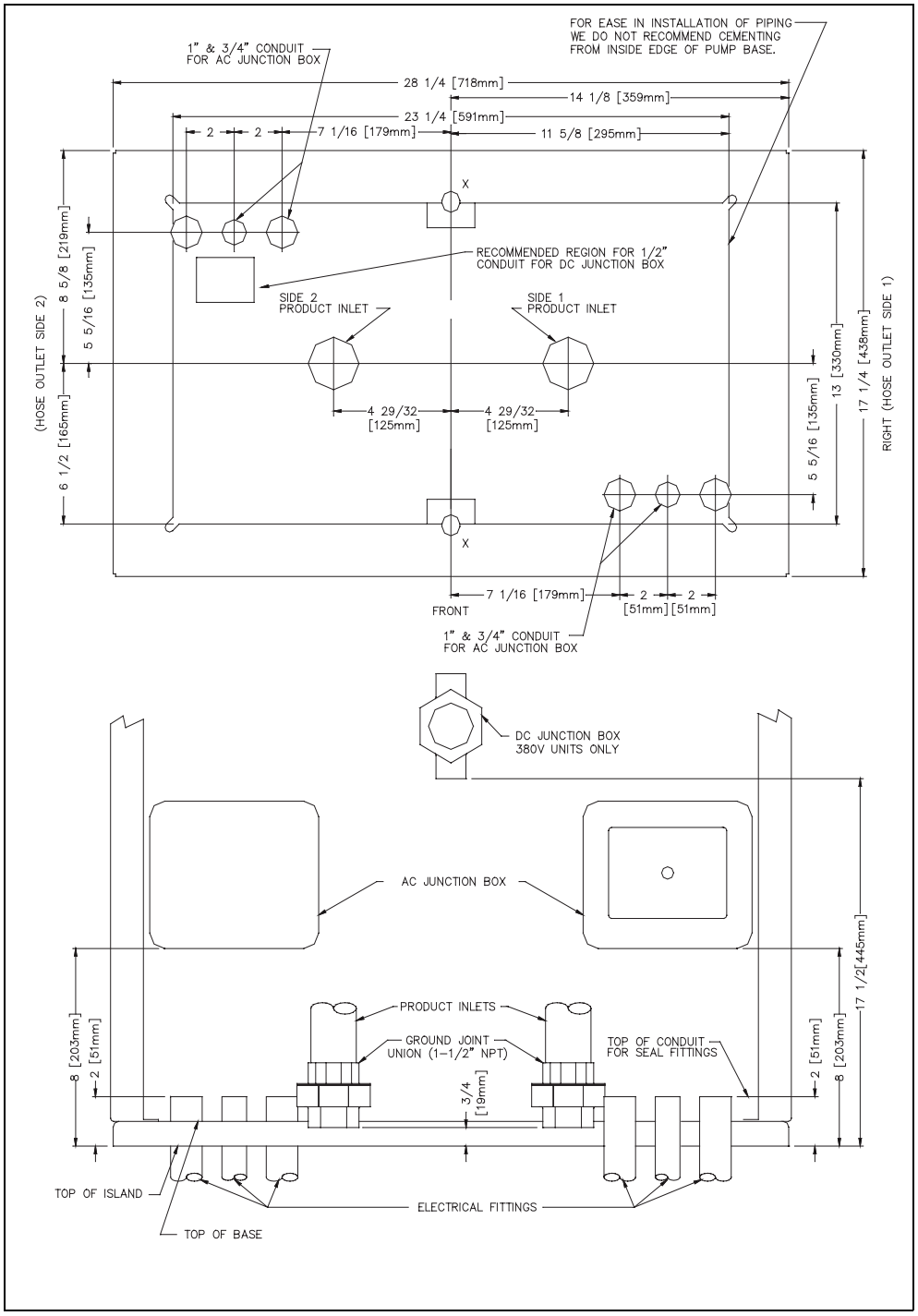

012011 Base Layout, Model 9852QTW1

Figure 23: 012011 Base Layout, Model 9852QTW1

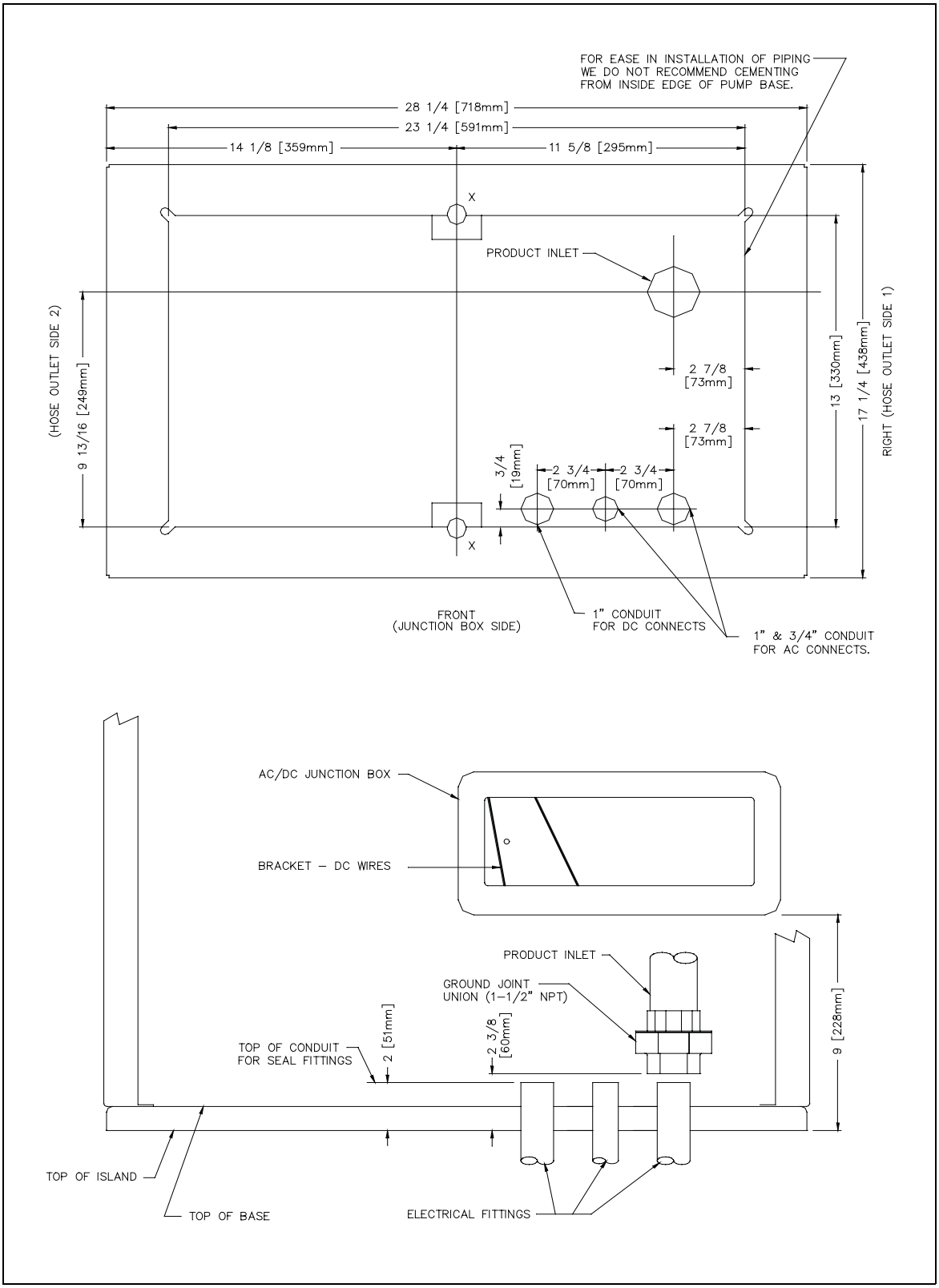

012012 Base Layout, Models 9852QTW2, 9853QTW2

Figure 24: 012012 Base Layout, Models 9852QTW2, 9853QTW2

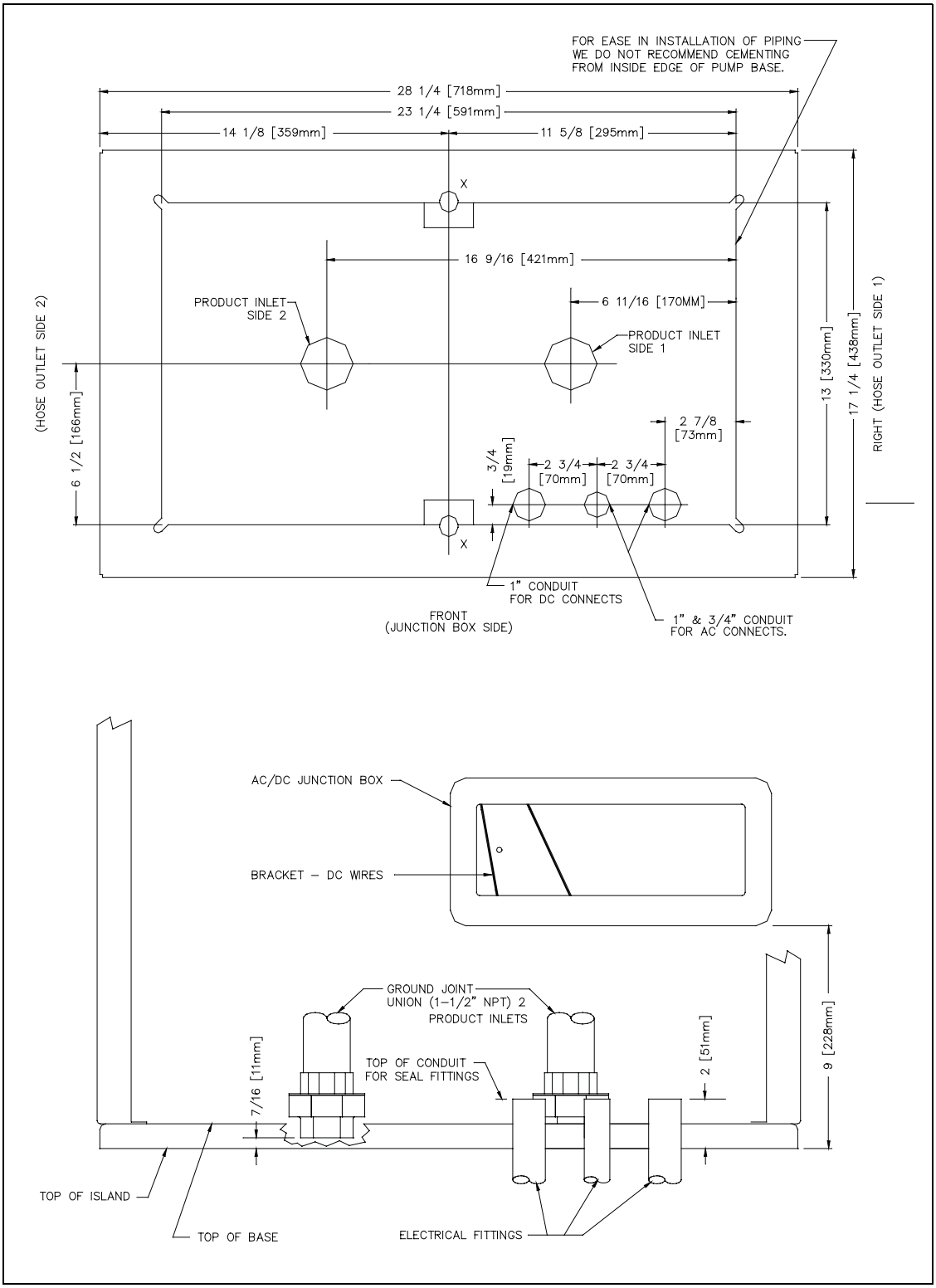

012013 Base Layout, Model 9853QTW1M

Figure 25: 012013 Base Layout, Model 9853QTW1M

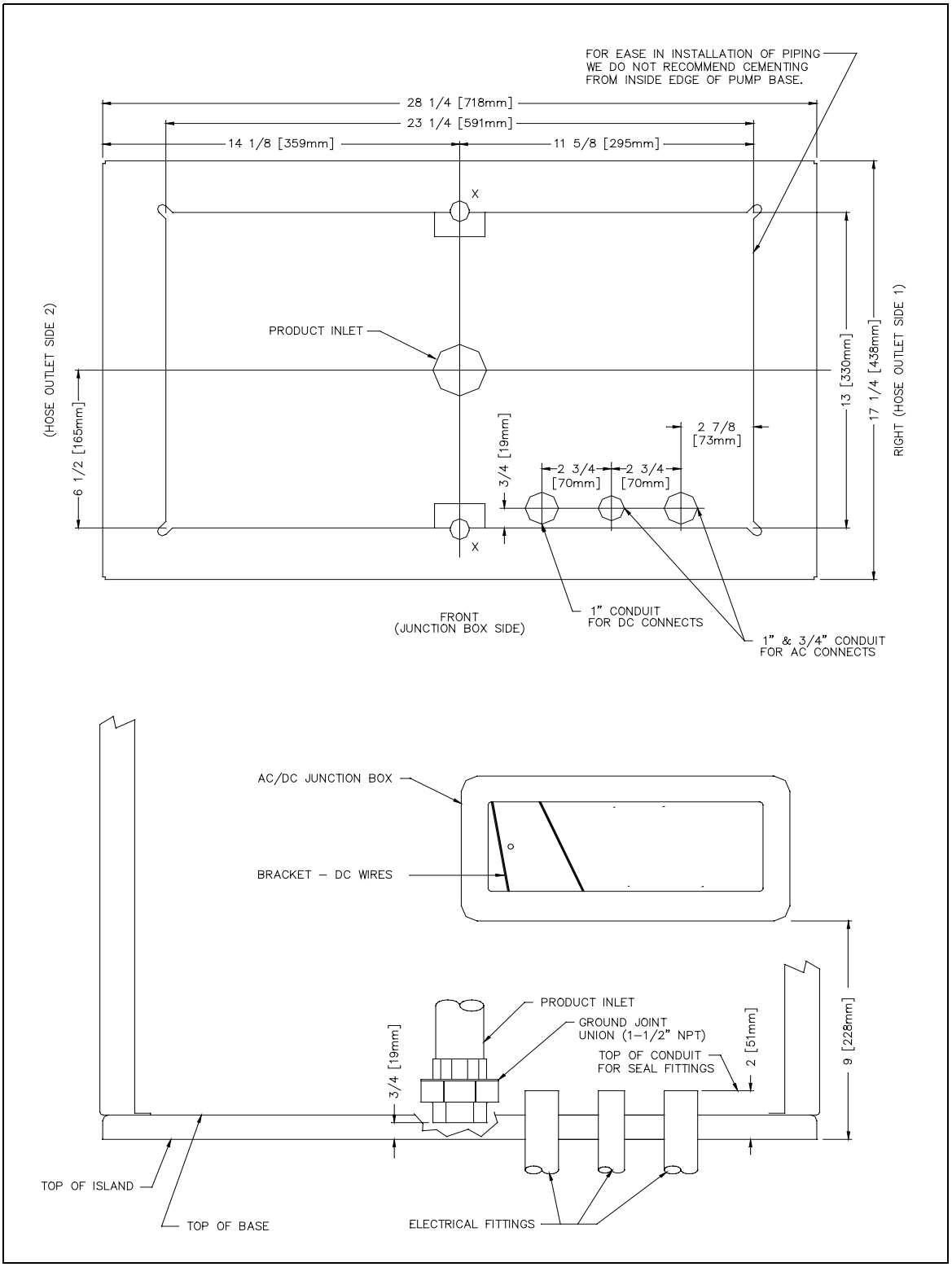

012014 Base Layout, Models 9852Q, 9853Q

Figure 26: 012014 Base Layout, Models 9852Q, 9853Q

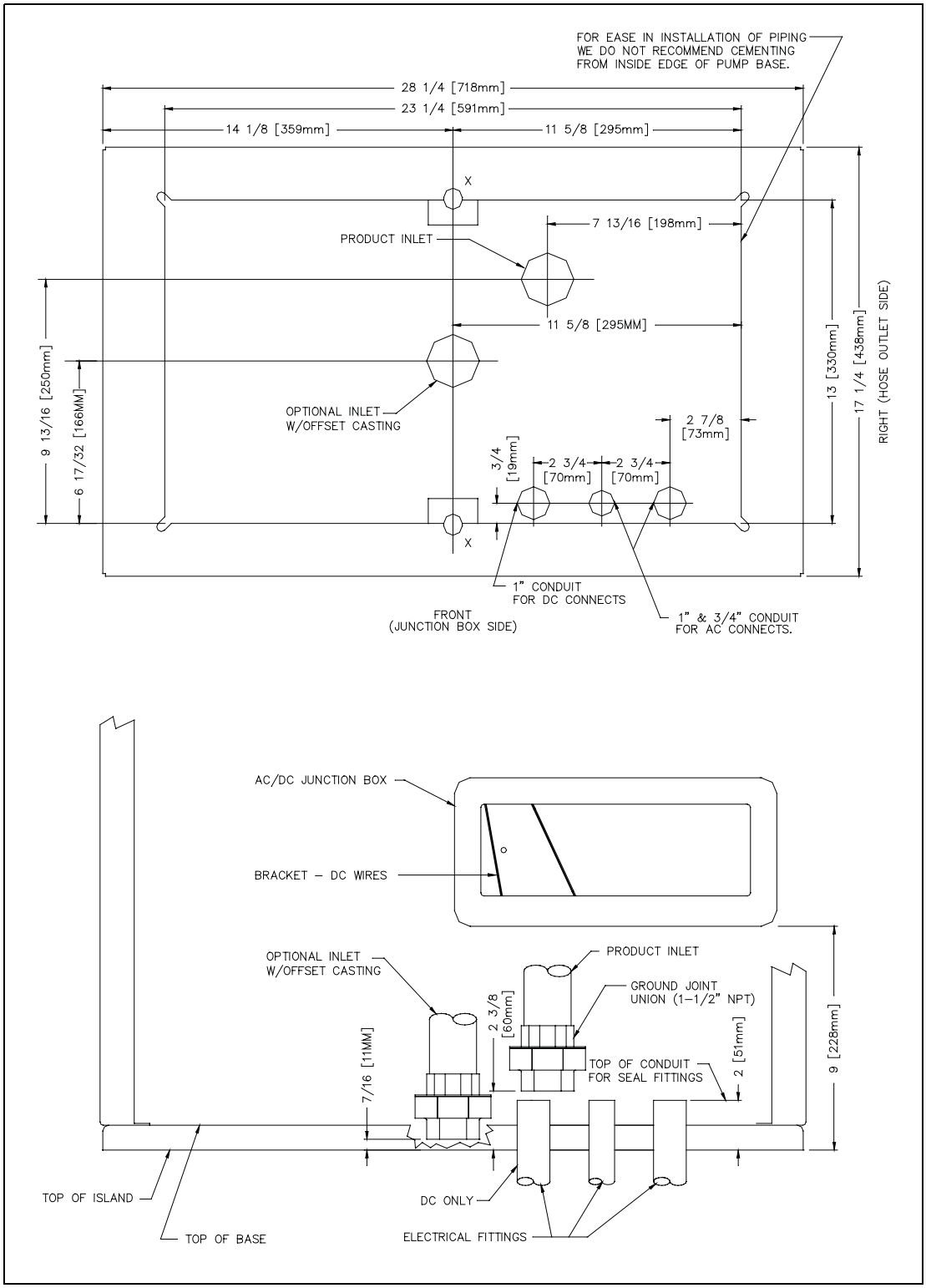

012015 Base Layout, Models 9852QXTW2, 9853QXTW2

Figure 27: 012015 Base Layout, Models 9852QXTW2, 9853QXTW2

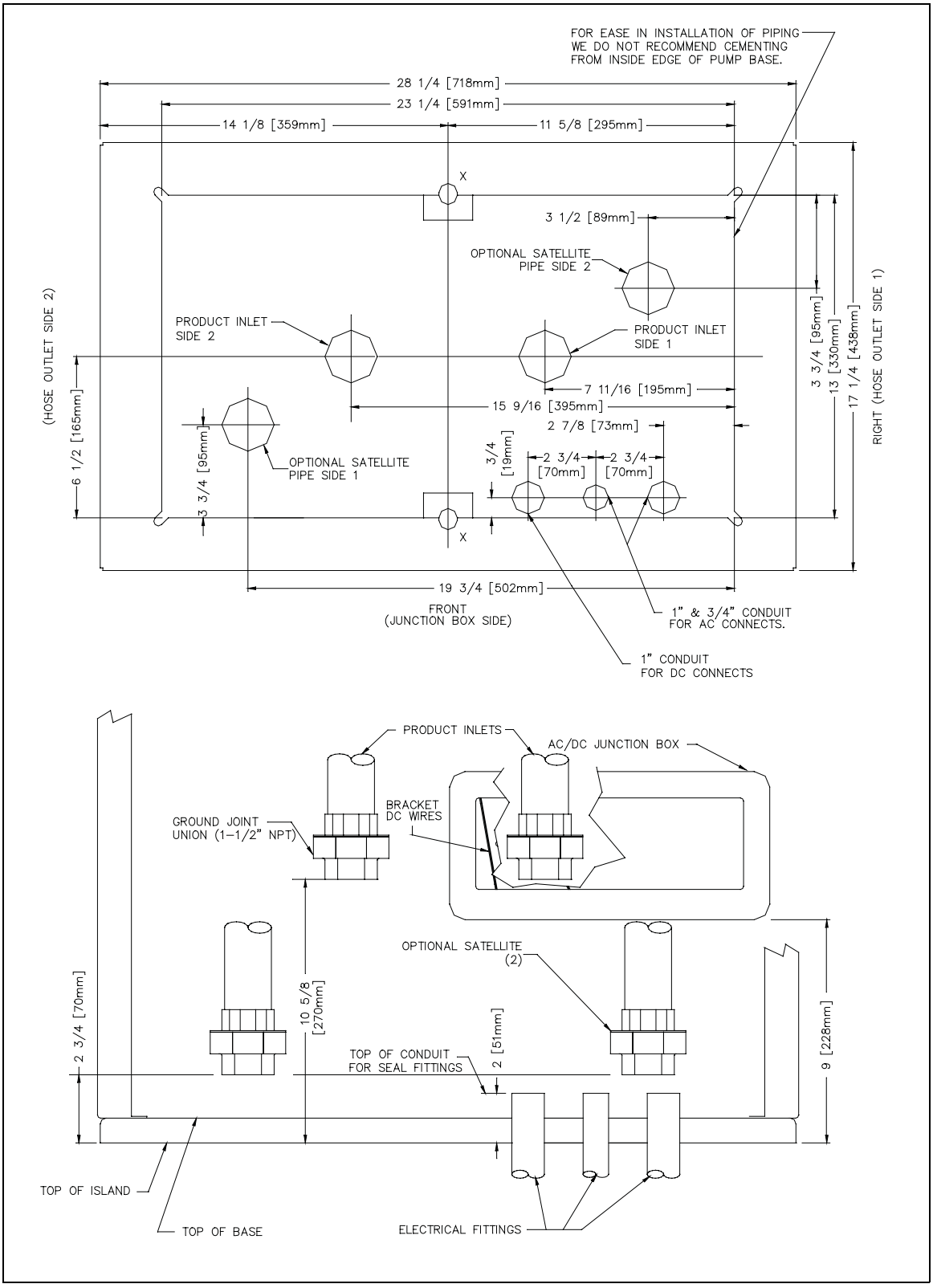

012016 Base Layout, Model 9840QX

Figure 28: 012016 Base Layout, Model 9840QX

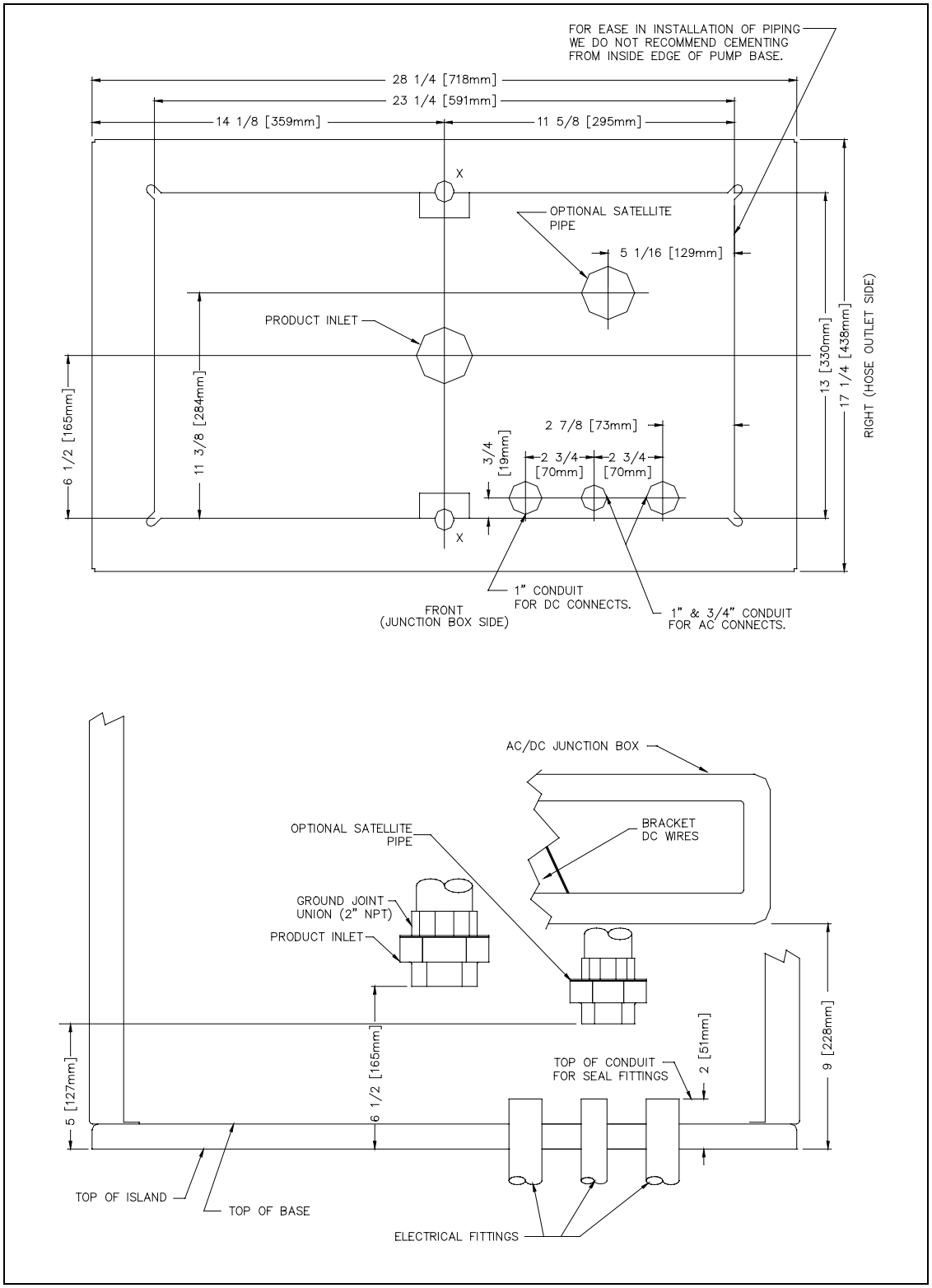

012017 Base Layout, Models 9852QX, 9853QX

Figure 29: 012017 Base Layout, Models 9852QX, 9853QX

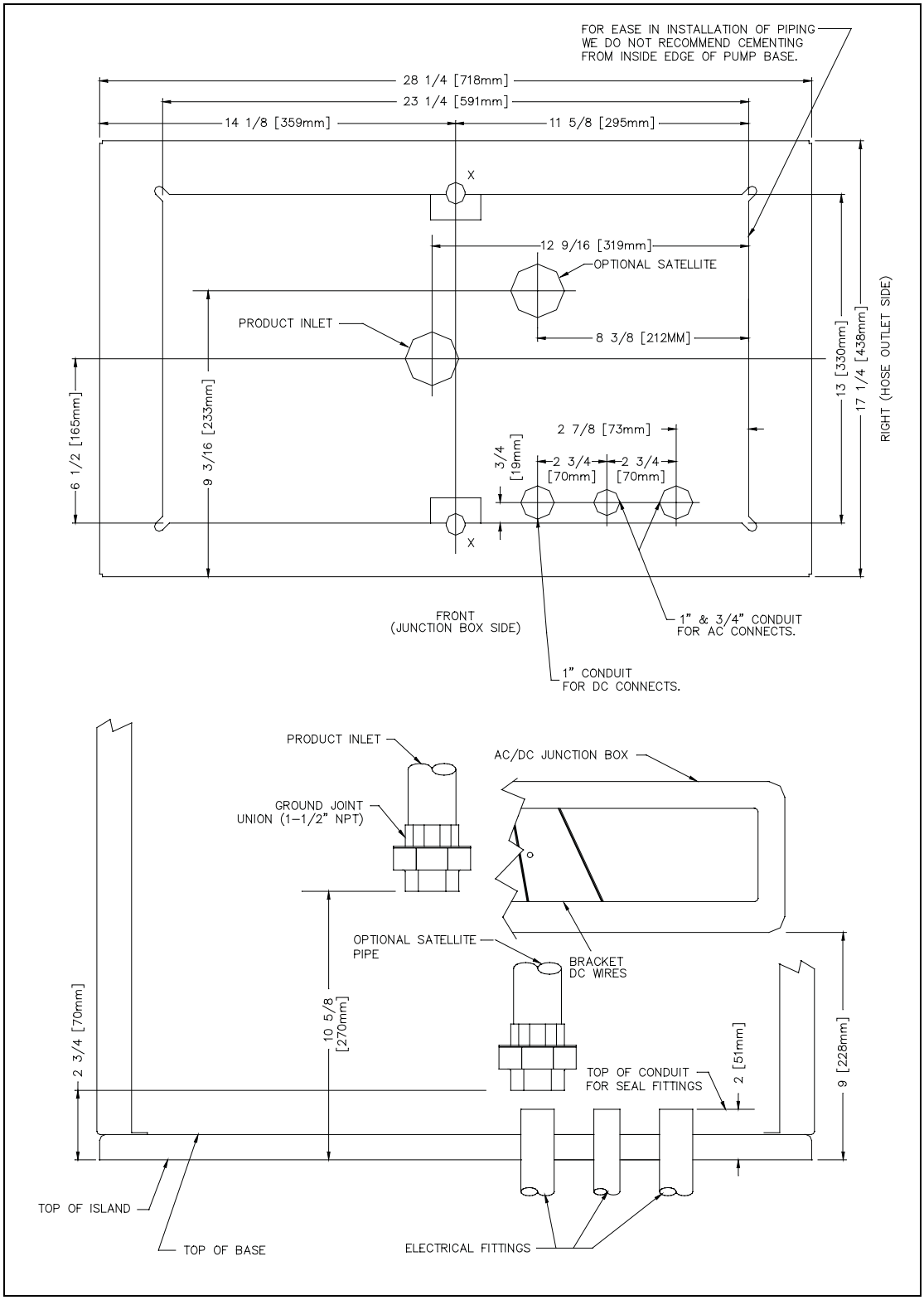

012018 Base Layout, Models 9852QXTW1, 9853QXTW1

Figure 30: 012018 Base Layout, Models 9852QXTW1, 9853QXTW1

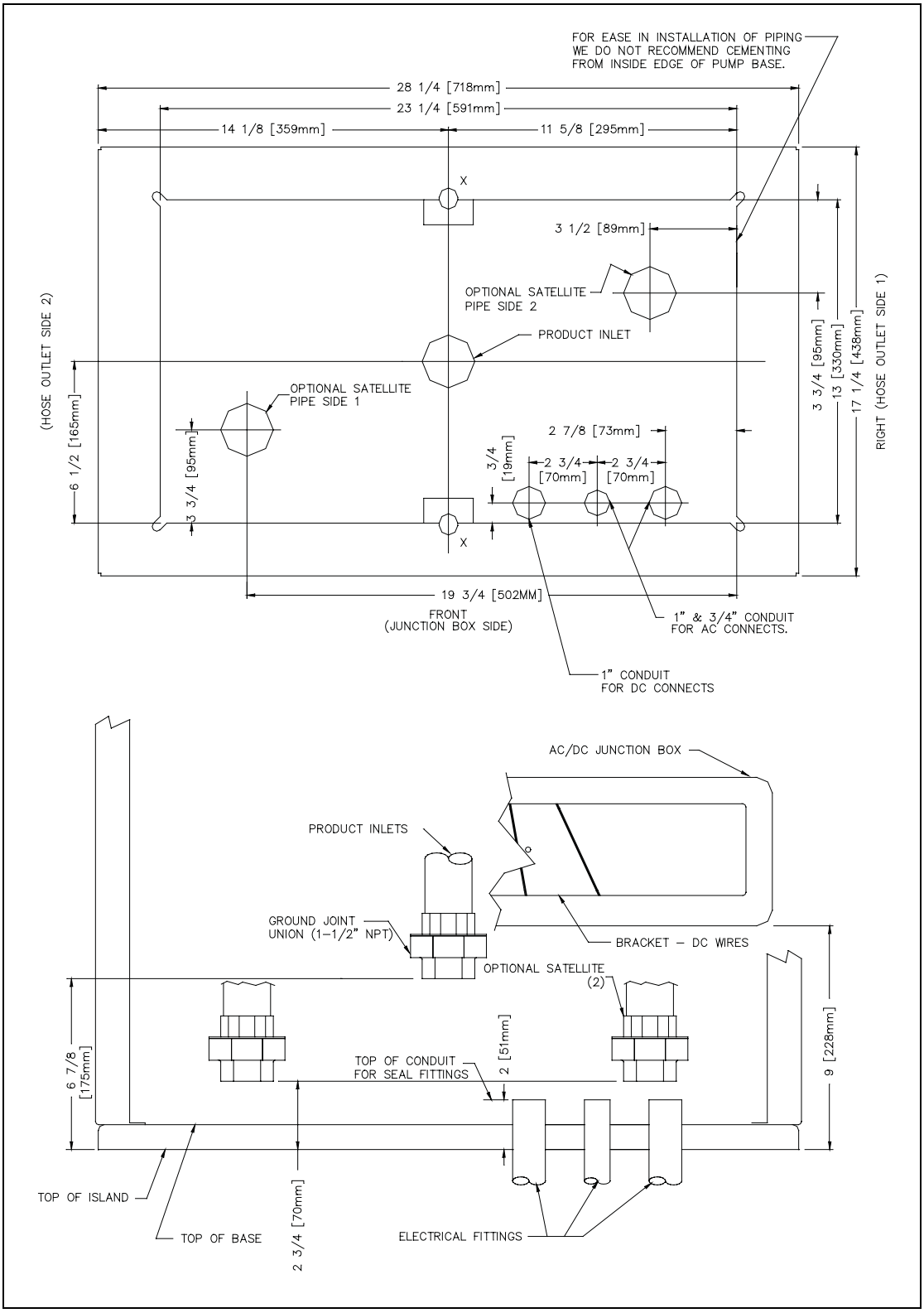

012019 Base Layout, Model 9840Q

Figure 31: 012019 Base Layout, Model 9840Q

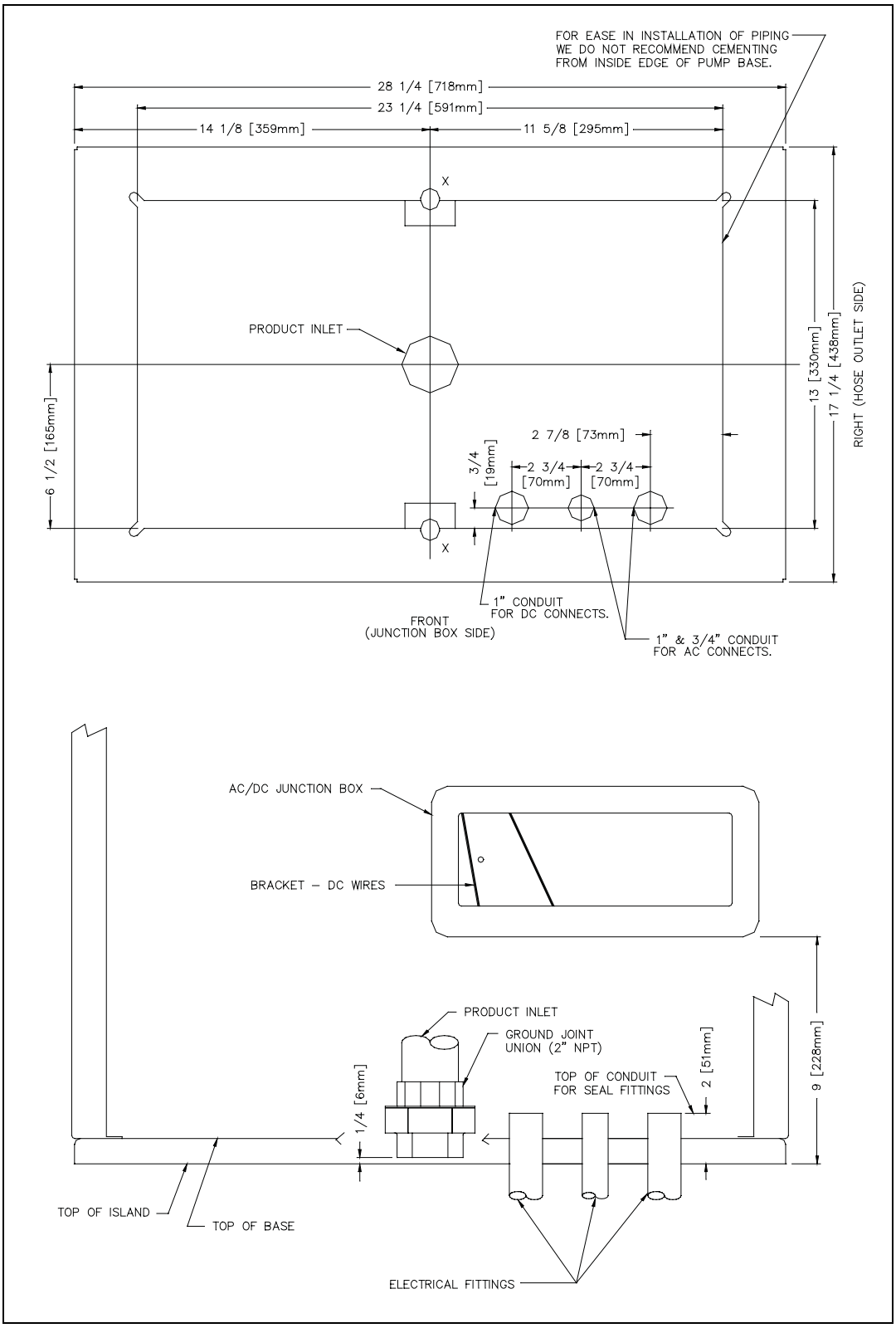

This page is intentionally left blank.

4 – Control Lines

Purpose

This section is provided to familiarize you with the control inputs and outputs that are available for the Series 9800A and 9800Q dispensing unit. It is recommended that you read these descriptions, to obtain a better working knowledge of the unit for planning the site wiring. See "Wiring" on page 53, for specific wiring diagrams and installation notes.

The Series 9800A and 9800Q units may be used with 230 VAC power for international applications. For international applications, the operating voltage of the control lines to these units is shown in parentheses as (230 VAC International).

If you are connecting the 9800A and 9800Q to a Gasboy FMS, refer to:

- C01918 CFN Site Controller II Installation Manual
- C35963 CFN Series Islander II Installation Manual
- MDE-4298 CFN Series SC III Install Manual
- MDE-4319 TopKAT FMS Installation Manual
- MDE-4344 Series 1000 Fuel Management System

Ground

To ensure safety and proper operation of the equipment, a good ground line must be provided. A ground wire (preferably green) must be connected between the ground wire of the system and the main electrical service panel. One (1) earth ground connection is required per unit. The ground rod should be a solid, corrosion-resistant conductor and must be installed at the main electrical panel in accordance with the National Electrical Code. It should be properly tied into the ground bus strip of the panel. It is recommended that the neutral and ground bus strips be bonded together (unless prohibited by local codes).

Micro Feed

The Micro Feed is a 115 VAC (230 VAC International) input required to power the microprocessor of the register's electronics. This power must always remain on and must be on a separate breaker from the control lines (Control/Pump Motor Feed or Control/SubM Feed - Side 1, Side 2). This must also be on a separate breaker from the fluorescent lights to reduce electrical noise and allow separate control of the lights. In a site configuration using multiple dispensing units, the power for the microprocessors of up to eight units can be supplied by one breaker. This line also supplies power to the optional TopKAT. If this unit is equipped with a TopKAT option, refer to MDE-4319 TopKAT Installation Manual for wiring requirements and information.

Micro Neutral

The Micro Neutral is a return line for AC current from the microprocessor of the dispensing unit to the breaker panel. This line also serves as the return for the optional TopKAT.

Control/Pump Motor Feed /Submersible Feed (Control/SubM Feed)

The Control/Pump Motor Feed is a 115VAC (230 VAC International) input which is required to power and authorize the control line. This line is used to provide authorization for the dispensing unit (when enabled through the DIP switches). If this line is controlled by an FMS that uses solid state relays, a resistor assembly must be installed between the Control Feed line and Feed Neutral to prevent false triggering of the authorization input.

External Valve

The External Valve line is used to directly power an anti-siphon valve mounted on the top of an aboveground tank. The valve must operate at the same voltage as the pump motor and the current draw must not exceed one Amp, or the valve must be switched through an external relay controlled by the External Valve line. Do not connect two or more External Valve lines together. If more than one pump is drawing from the tank, separate anti-siphon valves must be installed, or each External Valve line must operate an external relay which then operates the valve.

Neutral Feed

The Neutral Feed is the AC current return line back to the breaker panel for all attached devices (pump motor, solenoid valves).

Control/Submersible Feed (Control/SubM Feed)

The Control/SubM Feed is a 115 VAC (230 VAC International) input which is required to power and authorize the control line. This line is used to provide authorization for the dispensing unit (when enabled through the DIP switches). If this line is controlled by an FMS using solid state relays, a resistor assembly must be installed between the Control Feed line and Feed Neutral to prevent false triggering of the authorization input. The resistor assembly is 8.2K OHM, 10 Watt (P/N C05818) for 115/230 VAC domestic and 30K OHM, 10 Watt (P/N C06683) for 230 VAC international wiring. The TopKAT and CFN systems require the resistor assembly only when they are used with the 9800 pump/dispenser operating in standalone mode. Operating the 9800 in standalone mode with a TopKAT requires the TopKAT mechanical interface option; with a CFN system, it requires an optional mechanical pump control unit. This line also supplies the power which is switched to the slow flow and fast flow valves along with the switch detect signal. Two lines are provided for twins.

If the 9800 is to be controlled through authorization of this line, special care must be taken in the wiring of the submersible control lines when a common submersible is used for more than one hose outlet. See “Submersible Starter Drive (SubM Starter Drive)” on page 49 and Submersible Pump Drive (SubM Pump Drive) on page 50 for more information.

Units with Standard Submersible Drive (SubM Drive)

Power for the SubM Drive line originates from this input.

IMPORTANT INFORMATION

The submersible starter relay line, in standard remote dispensers, is not capable of directly powering a submersible pump. A starter relay must be used.

The control lines for twin remote dispensers can be combined together and powered by one breaker if individual control of each side is not desired. In a site configuration using multiple remote dispensers, the power for the control lines of up to eight hose outlets (eight singles or four twins) can be supplied from one breaker.

Units with Submersible Drive Relay Option

Power for the SubM drive line originates from this input. Units equipped with the optional relays for direct submersible pump drive can be connected directly to submersible pumps up to 3/4 HP at 115 VAC or 1-1/2 HP at 230 VAC. The gauge of this wire should be determined according to the size of the motor, the voltage at which the motor will be powered, and the distance from the breaker panel to the pump.

Submersible Starter Drive (SubM Starter Drive)

The SubM Starter Drive is a 115 VAC (230 VAC International) output used to control a submersible starter relay. Two lines are provided for the twins. This line is capable of supplying 300mA of AC current to control the coil of the submersible motor contactor (starter relay). This is sufficient for directly connecting to popular models, but if in doubt, check the contactor (relay) manufacturer's data sheet for the sealed VA rating. Divide the sealed VA by the coil voltage to determine the current.

CAUTION

The SubM Starter Drive line must not be connected directly to the submersible pump, shorted to any conduit or chassis metal, or mis-wired, or the CPU PC board will be instantly damaged.

This line must be capped when not in use. Follow the checks in the section "Start-Up and Test" on page 129 prior to applying power, to avoid accidental damage.

Note: When multiple dispensers are used to control a common submersible starter relay or pump, and the 9800 is controlled (authorized) through the ***Control/Pump Motor Feed*** *line (as in the case of some FMS), it is important that the lines from the 9800 to the submersible equipment are isolated from each other. This can be accomplished by running the submersible control lines through a secondary set of relay contacts in the FMS. If a secondary set of contacts is not available, external control relays must be used between the 9800 and the submersible starter relay or pump. Another option is to provide a separate submersible starter relay for each hose outlet. The submersible drive lines from the 9800 cannot be tied together, in any circumstance.*

Submersible Pump Drive (SubM Pump Drive)

This line is always present for remote dispensers, but is active only when SubM drive relays are supplied. The SubM drive is a 115/230 VAC (230 VAC International) output used to control the submersible starter relay or submersible pump. When connected directly to the submersible pump, the motor size cannot exceed 3/4 HP at 115 VAC or 1-1/2 HP at 230 VAC. Two lines are provided for twins. In cases where both lines control the same starter relay or pump, they can be combined. This line is also used to control an external valve used on aboveground tank installations.

Note: See Note: in "Submersible Starter Drive (SubM Starter Drive)" on page 49 for situations where more than one hose outlet is using the same submersible pump.

Reset Complete (Switch Detect)/Slow Flow

The Reset Complete/Slow Flow is a 115 VAC (230 VAC International) output which is used to indicate that the reset process is complete and the unit is ready to dispense product. For example, when it is used with an FMS. It may also be used to control a remote (satellite) slow flow valve. Two lines are provided for the twins.

In addition to the internal load of the slow flow valve, this line is capable of supplying 170mA AC maximum to the satellite valve and the FMS. When connecting to a non-Gasboy satellite or FMS, ensure that this limit is not exceeded.

CAUTION

This line must not be shorted to any conduit or chassis metal, mis-wired, used to control both stages of a satellite valve, or be connected to equipment that requires more than 170 mA AC from this line to operate, or the CPU PC board will be instantly damaged.

This line must be capped when not in use. Follow the checks in "Start-Up and Test" on page 129 before applying power, to avoid accidental damage.

Fast Flow

This is a 115 VAC (230 VAC International) line that can be used to control a remote (satellite) fast flow valve. Two lines are provided for twins. In addition to the internal load of the fast flow valve, this line is capable of supplying 170 mA AC to the satellite valve. When connected to a non-Gasboy satellite, ensure that this limit is not exceeded.

CAUTION

The fast flow line must not be shorted to any conduit or chassis metal, mis-wired, used to control both stages of a satellite valve, or be connected to the equipment requiring more than 170mA from this line to operate, or the CPU PC board will be instantly damaged.

This line must be capped when not in use. Follow the checks in "Start-Up and Test" on page 129 before applying power, to avoid accidental damage.

Phase 2 Feed

The Phase 2 feed is a hot feed which is the opposite phase of the pump motor feed. This line and the pump motor feed are used for 230VAC domestic motor applications. If connected to an equipment that requires control of the authorization input, the Phase 2 Feed should be switched through a separate relay to prevent false triggering of the authorization signal.

Slow/Fast Satellite Returns

These lines are used only in units that are equipped with satellite piping. They are used in applications where the remote dispenser and satellite may not dispense product at the same time. These lines are not connected internally when they leave the factory. Four lines are provided for the twins.

CAUTION

These lines must not be shorted to any conduit or chassis metal, or be connected to equipment that requires more than 170mA from each line to operate, or the CPU PC board will be instantly damaged.

These lines must be capped when not in use. Follow the checks in "Start-Up and Test" on page 129 before applying power, to avoid accidental damage.

Light Feed

The Light Feed is a 115VAC input required to power the fluorescent lights. In a site configuration using multiple remote dispensers (or pumps), the power for the lights of up to eight units can be supplied by one breaker. It is recommended that this be on a separate breaker from the Micro/Heater Feed, to reduce electrical noise and allow for separate control of the lights.

Light Neutral

The Light Neutral is a return line for AC current from the lights to the breaker panel. When a separate breaker is not used to control the lights, the light neutral is attached to the Micro Neutral.

Pulser

When the dispensing unit includes the optional pulser interface, a pulser output is provided. This pulser output provides a DC output to indicate the quantity dispensed. The pulse rate can be configured by a sealable DIP switch for rates of 1, 10, 100, 250, or 500 pulses per gallon or 1, 10, or 100 pulses per liter. For the 9840A pump, the pulse rates are 1, 10, 100, 250, or 500 pulses per gallon or 1, 10, or 100 pulses per liter. For the 9850A pump, the pulse rates are 1, 10, or 100 pulses per gallon or 1 or 10 pulses per liter.

The output is an open collector transistor output capable of sinking up to 100 milliamps DC at voltages up to 24 VDC. The DC ground for the circuit originates from the FMS. Since the transistor switches between ground and high-impedance, you must provide a voltage reference when the transistor is in the high-impedance state. This reference voltage is provided by a pull-up resistor installed at the FMS between the pulser input and the reference voltage. The value of this resistor is calculated based on the voltage and current requirements of the FMS pulser circuit.

Figure 32: Optional Pulser Interface

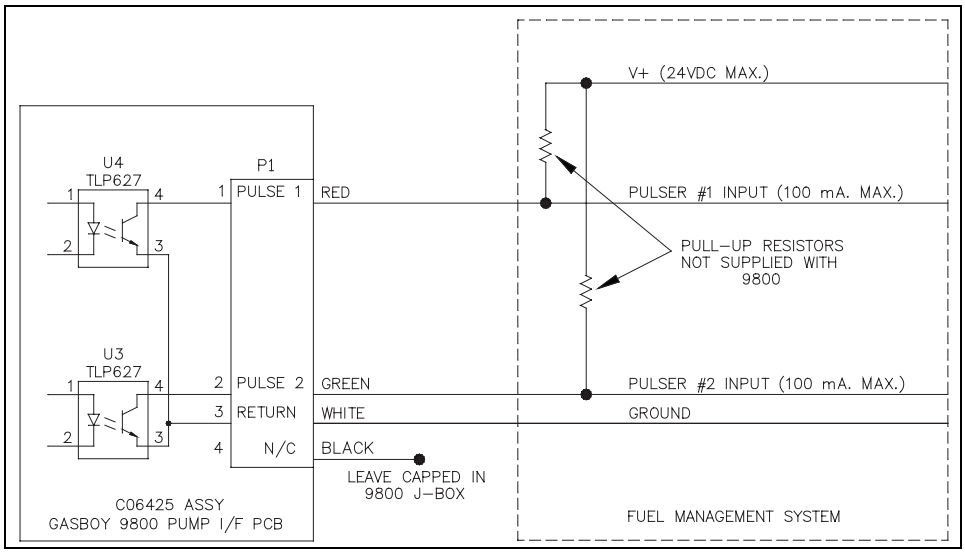

The J-Box used in the optional pulser interface contains four wires. Unused wires in the J-Box must be individually capped.

RS-485

When the dispensing unit includes the optional RS-485 interface, RS-485 lines are provided. This interface allows the user to connect a Gasboy CFN Series System directly to the Series 9800 dispensing unit.

Note: These lines must be individually capped when not in use.

The RS-485 interface is included with the TopKAT option.

RS-232 and RS-422

When the dispensing unit includes the optional TopKAT, lines for communication to the TopKAT are provided. These lines allow the user to communicate directly to the TopKAT via RS-232 or RS-422.

Note: These lines must be individually capped when not in use.

5 – Wiring

Note: If you have any questions pertaining to the installation contact your Gasboy distributor.

Wiring Precautions

A quality electrical installation is important to maintain proper safety levels and provide trouble-free operation of your Gasboy pump/remote dispenser. To ensure a quality installation, follow these rules:

1. All wiring must conform with all building/fire codes, all Federal, State, and Local codes, National Electrical Code, NFPA 70, NFPA 30, and Automotive and Marine Service Station Code (NFPA 30A) codes and regulations. Installations in Canada must also comply with the Canadian Electrical Code.
2. Use only threaded, rigid, metal conduit.
3. Use only UL-labeled insulated gasoline and oil-resistant stranded copper wiring of the appropriate size.
4. Wire connections should be tightly spliced and secured with a wire nut. The open end of the wire nut must be closed with electrical tape.
5. The line to the motor should be on a separate circuit and installed on a 20 to 30 AMP breaker depending on the motor size and/or the voltage setting.
6. Install an emergency power cutoff. In addition to circuit breaker requirements of NFPA 70 and NFPA 30A, a single control which simultaneously removes AC power from all site dispensing equipment is recommended. This control must be readily accessible, clearly labeled, and in accordance with all local codes.

   In an FMS application, the EMERGENCY STOP and STOP keys on the console and/or the optional EMERGENCY STOP button on the ICR do not remove AC power from equipment and under certain conditions, do not stop product flow.

   To ensure the highest level of safety to you, employees, and customers, it is recommended that all employees be trained as to the location and procedure for turning off power to the entire system.

   ⚠ WARNING

   To reduce the risk of electrical shock while servicing, turn off and lock out all power to the pump/remote dispenser. In submersible pump applications, turn off and lock out power to the submersible pump and any other remote dispensers that use that submersible pump. AC power can feed back into a shut-off dispenser when remote dispensers share a common submersible pump or starter relay.

7. Have the pump/remote dispenser installed by a competent installer/electrician.

Ground

To ensure proper operation of the equipment and provide the necessary safety factors, this unit must be grounded. A ground wire (preferably green) must be connected between the ground wire of the pump/remote dispenser and the main electrical service panel. One earth ground connection is required per unit. The ground rod should be a solid, corrosion resistant conductor and must be installed at the main electrical panel in accordance with the National Electrical Code. It should be tied appropriately into the ground bus strip of the panel. It is recommended that the neutral and ground bus strips be bonded together (unless prohibited by local codes).

Circuit Breakers

Power to the unit must be supplied from dedicated breakers. No other equipment should be powered from these breakers. AC power for the micro feed must be provided from a different breaker than that of the pump or remote dispenser control. This not only provides electrical isolation for the micro feed, but allows the unit to be disabled without shutting off power to the microprocessor PCB. The AC power for the micro feed may be grouped together for multiple units. It is recommended that no more than eight units be supplied from one breaker.

Remote dispensers may be grouped together on a single breaker when the submersible pump has its own breaker. It is recommended that no more than two remote dispensers be powered from one breaker to maintain isolated control with the circuit breaker panel in case of problems. Power from a separate breaker must be supplied to units that are directly driving pumps (suction or submersible). A tag on the motor identifies the maximum current draw of the motor. If two (2) pumps are supplied from one breaker, that breaker must be capable of handling the load of both motors. In cases where multiple remote dispensers supply power to a single submersible pump, all breakers controlling the remote dispenser must be on the same phase of power. Failure to do this will damage the equipment. Provisions must be made to break both legs of any AC circuit.

The Pump Motor

Pumps are shipped from the factory with motors wired as per specifications given on the order regarding the kind of current, frequency and voltage.

Often during installation, it is necessary to change the original setting to suit the AC power source. To do this, locate the motor change-over plate that is typically located on the shaft end of the motor, and remove the screw which secures it in place. Slide the plate such that the desired voltage, as marked on the plate, lines up with the screw hole. Reinsert the screw and secure the plate in place.

CAUTION

Many motor failures result from improper setting of the motor change-over plate. If set for 115 VAC and a 230 VAC feed is used, the motor will burn out after running for only a short time. If set for 230 VAC and a 115 VAC feed is used, the motor will run very slowly and the starting field will soon burn out.

Motor Amp Ratings

The following chart shows the maximum running amperage that can be expected for each pump motor, unless noted otherwise:

Models	115 v/60 hz units	230 v/60 hz units	230 v/50 hz units
9852A, 9852ATW2	7.8	3.9	3.5
9852ATW1, 9853A, 9853ATW2, 9853ATW1M	11	5.5	6.5
9853AHC, 9840A (2 motors combined)	Not available	11 (*See Notes*)	13 (*See Notes*)
9850A	Not available	11.5	8.4
9852Q, 9852QTW2, 9852QTW1, 9853Q, 9853QTW2, 9853QTW1M	10.0	5.0	6.0
9840Q (2 motors combined)	Not available	10 (See Notes)	12.0 (See Notes)

Notes:1) These numbers do not account for the higher load upon start-up, nor up to one additional amp associated with other electrical components (lights, solenoid valves, and so on).

2) The 9852ATW2, 9853ATW2, and 9853ATW1M have one pump motor per side.

3) The 9853AHC and the 9840A models should use no less than a 20-amp breaker to account for the high current upon start-up.

4) The 9852QTW2, 9853QTW2, and 9853QTW1M have one pump motor per side.

5) The 9840Q model should use a breaker of 20 Amps or more, to account for the high current upon start-up.

Wire Size

The following table shows the required AC wire size for suction and submersible pumps based on the HP rating of the pump motor and the distance from the circuit breaker to the pump/remote dispenser for both 115 and 230 volt units. Use this table as a guide for selecting the proper size wire for the Control/Pump Motor Feed, Control/Subm Feed (Optional Drive), Subm Drive, Neutral Feed, and Phase 2 Feed.

The AC wire size for the Micro Feed, Micro Neutral, Light Feed and Light Neutral should be 14 American Wire Gauge (AWG) for runs up to 300 feet (91m) from the breaker panel, or 12 AWG for distances over 300 feet (91m).

The AC wire size for the Control/Subm Feed (Standard Drive), Subm Starter Drive, and Neutral Feed of a remote dispenser should be 12 AWG. These control lines are used to power the solenoid valves and the submersible starter relay (*the submersible pump cannot be directly powered from the Standard Subm Drive line*).

If multiple units are powered from the same breaker through the same wires, you must increase the gauge of the wires to handle the added load according to the distance from the breaker panel and the HP rating (if applicable).

The AC wire size for the Reset Complete (Switch Detect)/Slow Flow, Fast Flow, and Slow/Fast Satellite Return lines should be 14 AWG (when they are used).

The DC wire size for the Pulse Output lines must be 18 AWG (when they are used). Shielded cable, as described in "Pulse Output or RS-485 Wiring" on page 59, allows pulser lines to run with the AC wires.

The DC wire size for the **RS-485** lines for connection to a Gasboy FMS should be two twisted pair cable (when they are used). Refer to "Pulse Output or RS-485 Wiring" on page 59.

The DC wire for RS-232 and RS-422 lines for connection to a TopKAT are described in MDE-4319 TopKAT Installation Manual.

115 VOLT WIRE GAUGE SIZES PER FEET/METERS OF RUN								
FEET METERS / MOTOR HP	25' 8m	50' 15m	100' 31m	150' 46m	200' 61m	250' 76m	300' 91m	OVER 300' (91m) USE RELAY AT MOTOR LOCATION
1/2	14	12	10	8	8	8	8	
3/4	14	12	10	8	6	6	4	
230 VOLTS								
1/2	14	12	12	12	10	10	10	
3/4	14	12	12	10	10	10	8	
1—1/2	12	12	10	10	8	8	6	

Conduit for 9800A

All wiring to the Gasboy Series 9800A dispensing unit must be installed in threaded, rigid, metal conduit and not PVC conduits. When the Series 9800A dispensing unit is used with a Gasboy FMS, it is recommended that AC power wires and the DC Power wires be installed in separate conduits. They should not be run in a common conduit or trough. However, if AC and DC power wires share the conduit, for DC wiring, you must use the cable as specified in "Pulse Output or RS-485 Wiring" on page 59. Wiring between a Fuel Point Reader (FPR) and its pre-amp junction box is intrinsically safe and must be run in a conduit with only other intrinsically safe wiring. It cannot be run in a conduit with AC, DC, RS-485, or pulser wiring, irrespective of the cable type used. Refer to C35628 Fuel Point Reader Installation and Retrofit Instructions Manual for details.

When you use an FMS other than Gasboy, refer to the manufacturer's installation manual for specific conduit requirements. All wiring and conduit runs must also conform with the National Electrical Code (NFPA 70) and the Automotive and Marine Service Station Code (NFPA 30A). All wiring and conduit runs must conform to local codes. Installations in Canada must also comply with the Canadian Electrical Code.

Use the charts below as a guideline to determine the proper conduit sizes for the Gasboy Series 9800A dispensing unit. While planning the orientation of the wiring runs, follow the applicable Gasboy wiring diagram and consider the layout of the components at the site. Long runs or a large number of bends may require you to increase conduit size over what is listed.

THHN/THWN Wire Areas

Gauge	Diameter		Area (Sq. Units)	
	in	mm	in	mm
18	.090	2.29	.007	4.1
16	.104	2.64	.009	5.5
14	.118	2.95	.011	6.8
12	.135	3.43	.014	9.2
10	.169	4.29	.022	14.5
8	.216	5.49	0.37	23.7
6	.259	6.60	0.53	34.2
4	.331	8.41	.086	55.5
3	.359	9.14	.102	65.6
2	.394	10.01	.122	78.7
1063A	.417	10.59	.137	88.4

Areas of Trade Size Conduit

Trade Size	Int Diameter		Area (Sq. Units)		Fill Area (Sq. Units) 25% Fill	
	in	mm	in	mm	in	mm
1/2	.629	16	.303	196	.076	49
3/4	.826	21	.532	343	.133	86
1	1.063	27	.862	556	.215	139
1-1/4	1.378	35	1.50	968	.375	242
1-1/2	1.614	41	2.04	1314	.509	329
2	2.087	53	3.36	2165	.839	541

To determine the conduit size required, use the THHN/THWN Wire Areas table (left) to find the area for each wire gauge. Add up all the wire areas. Use the Areas of Trade Size Conduit table (right) to select the smallest number in the 25% fill area (based on NEC 501-1) that comes closest without exceeding the total wire area.

Conduit for 9800Q

All wiring to the Gasboy Series 9800Q dispensing unit must be installed in threaded, rigid, metal conduit. PVC is not acceptable. When the Series 9800Q dispensing unit is used with a Gasboy FMS, it is recommended that AC power wires and the DC Power wires be installed in separate conduits. They should not be run in a common conduit or trough. However, if AC and DC power wires share the conduit, for DC wiring, you must use the cable as specified in "Pulse Output or RS-485 Wiring" on page 59. Wiring between a FPR and its pre-amp junction box is intrinsically safe and must be run in a conduit with only other intrinsically safe wiring. It cannot be run in a conduit with AC, DC, RS-485, or pulser wiring, regardless of the cable type used. Refer to C35628 Fuel Point Reader Installation and Retrofit Instructions Manual for details.

When using an FMS other than a Gasboy system, refer the manufacturer's installation manual for specific conduit requirements. All wiring and conduit runs must also conform with the National Electrical Code (NFPA 70) and the Automotive and Marine Service Station Code (NFPA 30A). All wiring and conduit runs must conform to local codes. Installations in Canada must also comply with the Canadian Electrical Code.

Use the charts below as a guideline to determine the proper conduit sizes for the Gasboy Series 9800Q dispensing unit. When planning the orientation of the wiring runs, follow the applicable Gasboy wiring diagram and consider the layout of the components at the site. Long runs or a large number of bends may require you to increase conduit size over what is listed.

THHN/THWN Wire Areas

Gauge	Diameter		Area (Sq. Units)	
	in	mm	in	mm
18	.090	2.29	.007	4.1
16	.104	2.64	.009	5.5
14	.118	2.95	.011	6.8
12	.135	3.43	.014	9.2
10	.169	4.29	.022	14.5
8	.216	5.49	0.37	23.7
	.259	6.60	0.53	34.2
4	.331	8.41	.086	55.5
3	.359	9.14	.102	65.6
2	.394	10.01	.122	78.7
1063A	.417	10.59	.137	88.4

Areas of Trade Size Conduit						
Trade Size	Int Diameter		Area (Sq. Units)		Fill Area (Sq. Units) 25% Fill	
	in	mm	in	mm	in	mm
1/2	.629	16	.303	196	.076	49
3/4	.826	21	.532	343	.133	86
1	1.063	27	.862	556	.215	139
1-1/4	1.378	35	1.50	968	.375	242
1-1/2	1.614	41	2.04	1314	.509	329
2	2.087	53	3.36	2165	.839	541

To determine conduit size needed, use the THHN/THWN Wire Areas table (above) to find the area for each wire gauge. Add up all wire areas. Use the Areas of Trade Size Conduit Table (above) to select the smallest number in the 25% fill area (based on NEC 501-1) that comes closest without exceeding the total wire area.

Pulse Output or RS-485 Wiring

Pulse Output

When installed in a separate DC conduit, 18 AWG wires are required for installation. Although it is recommended that DC pulser wires be run in a conduit separate from AC wires, they can be combined in the same conduit with AC wires providing UL-listed cable with the following specifications:

Conductor	18 AWG stranded wire. Number of conductors to be determined by number of hoses (2 conductors for 1 hose; 3 conductors for 2 hose)
Shield	Foil-wrapped 100% coverage and/or tinned copper braid 90% coverage
Drain Wire	Stranded, tinned copper, 20 AWG or larger/or braided shield
Voltage Rating	Maximum operating voltage of 600V
Environmental	Gas- and oil-resistant; suitable for wet or dry locations.

RS-485 Wiring

Twisted pair shielded cable is highly recommended for RS-485 wiring. Although it is recommended that the wires be run in a separate conduit away from AC wires, they can be combined in the same conduit with AC wires providing UL-listed cable with the following specifications:

Conductor	18 AWG stranded wire. 2 twisted-pairs.
Shield	Foil-wrapped 100% coverage and/or tinned copper braid 90% coverage
Drain Wire	Stranded, tinned copper, 20 AWG or larger/or braided shield
Voltage Rating	Maximum operating voltage of 600V
Environmental	Gas- and oil-resistant; suitable for wet or dry locations.

Gasboy can supply Belden® 1063A (P/N C09655) which is a UL-listed, 4-conductor cable that meets the requirements listed above.

Note: Belden 1063A is UL-listed but not CSA listed. A cable with a voltage rating of less than 600V must be installed in a separate conduit away from all AC wires.

Dual Pulse Output Wiring

Figure 33 shows the changes in wiring when you use a pump equipped with the dual pulse output option. The dual pulse output option provides two isolated pulse outputs from a single pulser. It is available only on 9800Q single dispensers.

Figure 33: Dual Pulse Output Wiring

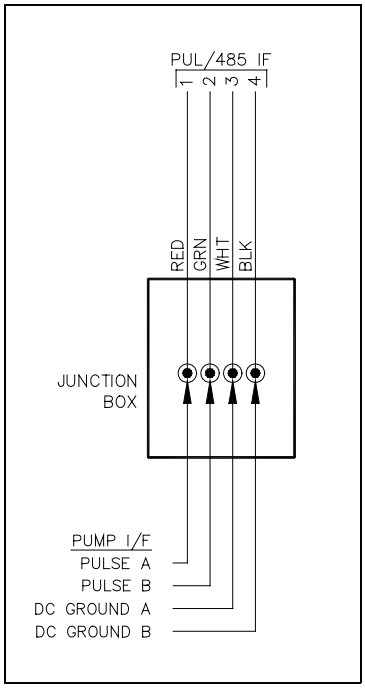

Wiring Diagrams for 9800A

The following pages contain wiring notes and wiring diagrams for pumps/dispensers models that are in current production. If your pump/dispenser has multi-colored wires, it is a current production model. If it does not have multi-colored wires, it is an older model. Refer to the "Wiring Conversion Chart" on page 61 to determine the correct wire colors.

Wiring Conversion Chart

	Wiring Diagrams								
New Colors	**024251**	**024252**	**024253**	**024254**	**024255**	**024256**	**024257**	**024258**	
BLU/WHT	BLU (14 GA)	BLU (14 GA)	BLU (14 GA)	BLU (14 GA)	BLU (14 GA)	BLU (14 GA)	BLU (14 GA)	BLU	(14 GA)
RED/WHT	RED (14 GA)	RED (14 GA)	RED (14 GA)	RED (14 GA)	RED (14 GA)	RED (14 GA)	RED (14 GA)	RED (14 GA)	
BLK/WHT	BLK (14 GA)	NA	NA	NA	BLK (14 GA)	BLK (14 GA)	NA	NA	
ORA/BLK	ORA (14 GA)	NA	NA	NA	ORA (14 GA)	ORA (14 GA)	NA	NA	
BRN/WHT	NA	NA	NA	BRN	1	BRN 1	NA	BRN1	BRN
YEL/BLK	NA	NA	NA	YEL 1	YEL 1	NA	YEL1	YEL	
VIO/WHT	NA	NA	NA	NA	RED 2	NA	NA	NA	
ORA/WHT	ORA 2	NA	NA	NA	ORA 2	ORA 2	NA	NA	
PINK/WHT	PINK 2	NA	NA	NA	PINK 2	PINK 2	NA	NA	
GRA/WHT	GRA 2	NA	NA	NA	GRA 2	GRA 2	NA	NA	
BRN/YEL	NA	NA	NA	NA	BRN 2	NA	NA	NA	
YEL/WHT	NA	NA	NA	NA	YEL 2	NA	NA	NA	

While wiring pumps/dispensers, ensure that you refer the appropriate wiring diagram and follow all notes.

CAUTION

Failure to follow the correct wiring diagram and all the listed notes and precautions may result in damage to the CPU PCB.

Wiring diagrams are presented in numerical order. Figure 40 on page 78 (024257) has two diagrams; one for simultaneous operation of master and satellite and the other for non-simultaneous operation. Ensure that you use the correct one for your application.

All diagrams in this section show domestic wiring (US and Canada). Breakaway drawings are shown for international applications where wiring is different.

024251 Wiring Diagram Model 9852ATW1

Notes:1) All wiring and conduit runs must conform with all building/fire codes, all Federal, State, and Local codes, National Electrical Code (NFPA 70), and Automotive and Marine Service Station Code (NFPA 30A) codes and regulations. Installations in Canada must also comply with the Canadian Electrical Code.

2) The Pump motor can be wired as 230 VAC to reduce current draw. See the breakaway view of 230 VAC WIRING in Figure 34 on page 63. All other wiring should remain the same except for the addition of the L2 (requires 230 VAC breaker for control). If connected to an equipment that requires control of the authorization input, the Phase 2 Feed should be switched through a separate relay to prevent false triggering of the authorization signal.

3) To avoid damage to the CPU PC board, all unused wires must be individually capped, and before applying power, you must ensure that the RESET COMPLETE and FAST FLOW wires are not shorted to the conduit or chassis.

4) RESET COMPLETE (switch detect) line can supply 170 mA AC maximum for connecting to FMS circuitry.

5) FAST FLOW line can supply 170 mA AC maximum for remote control or monitoring of the fast flow valve found in the pump.

6) If the CONTROL/PUMP MOTOR FEED line is controlled by a FMS that uses solid state relays, a resistor assembly must be installed between the Control Feed line and Feed Neutral to prevent false triggering of the authorization input. The resistor assembly is 8.2K OHM, 10 Watt (P/N C05818) for 115/230 VAC domestic and 30K OHM, 10 Watt (P/N C06683) for 230 VAC international wiring.

7) When used with an aboveground tank, the anti-siphon valve mounted on the tank must be driven from the EXTERNAL VALVE line, have the same operating voltage as the pump motor, and the current draw must not exceed 1 Amp. If these conditions are not met, it must be controlled by an external relay driven from the EXTERNAL VALVE line. DO NOT connect the anti-siphon valve or external relay to the RESET COMPLETE line. DO NOT connect two or more EXTERNAL VALVE lines together. If more than one pump is drawing from the tank, separate anti-siphon valves must be installed, or each EXTERNAL VALVE line must operate an external relay, which then operates the valve.

8) Refer to the wire size chart in the section "Wire Size" on page 56 to determine the wire size for the control wiring.

9) If this unit is equipped for 230 VAC operation (international), wire as shown in the standard 115 VAC wiring layout diagram.

10) If this unit is equipped with a TopKAT option, there will be six wires in the DC junction box. Refer to MDE-4319 TopKAT Installation Manual for wiring requirements and information.

Figure 34: 024251 Wiring Diagram Model 9852ATW1

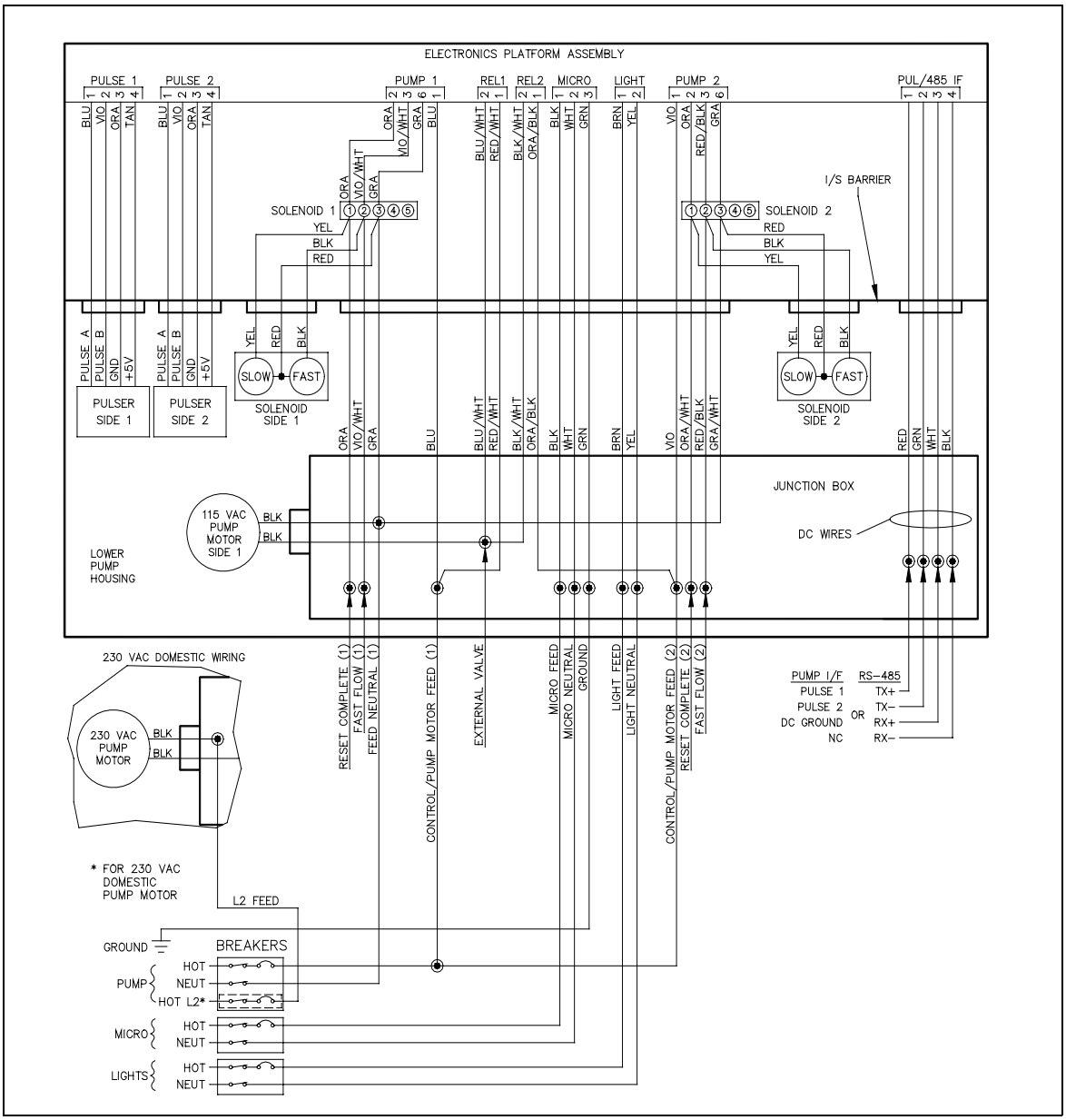

024252 Wiring Diagram Models 9852A, 9853A

Notes:1) All wiring and conduit runs must conform with all building/fire codes, all Federal, State, and Local codes, National Electrical Code (NFPA 70), and Automotive and Marine Service Station Code (NFPA 30A) codes and regulations. Installations in Canada must also comply with the Canadian Electrical Code.

2) The Pump motor can be wired as 230 VAC to reduce current draw. See the breakaway view of 230 VAC WIRING in Figure 35 on page 65. All other wiring should remain the same except for the addition of the L2 (requires 230 VAC breaker for control). If connected to an equipment that requires control of the authorization input, the Phase 2 Feed should be switched through a separate relay to prevent false triggering of the authorization signal.

3) To avoid damage to the CPU PC board, all unused wires must be individually capped, and before applying power, you must ensure that the RESET COMPLETE and FAST FLOW wires are not shorted to the conduit or chassis.

4) RESET COMPLETE (switch detect) line can supply 170 mA AC maximum for connecting to FMS circuitry.

5) FAST FLOW line can supply 170 mA AC maximum for remote control or monitoring of the fast flow valve found in the pump.

6) If the CONTROL/PUMP MOTOR FEED line is controlled by a FMS that uses solid state relays, a resistor assembly must be installed between the Control Feed line and Feed Neutral to prevent false triggering of the authorization input. The resistor assembly is 8.2K OHM, 10 Watt (P/N C05818) for 115/230 VAC domestic and 30K OHM, 10 Watt (P/N C06683) for 230 VAC international wiring.

7) When used with an aboveground tank, the anti-siphon valve mounted on the tank must be driven from the EXTERNAL VALVE line, have the same operating voltage as the pump motor, and the current draw must not exceed 1 Amp. If these conditions are not met, it must be controlled by an external relay driven from the EXTERNAL VALVE line. DO NOT connect the anti-siphon valve or external relay to the RESET COMPLETE line. DO NOT connect two or more EXTERNAL VALVE lines together. If more than one pump is drawing from the tank, separate anti-siphon valves must be installed, or each EXTERNAL VALVE line must operate an external relay, which then operates the valve.

8) Refer to the wire size chart in the section "Wire Size" on page 56 to determine the wire size for the control wiring.

9) If this unit is equipped for 230 VAC operation (international), wire as shown in the standard 115 VAC wiring layout diagram.

10) If this unit is equipped with a TopKAT option, there will be six wires in the DC junction box. Refer to MDE-4319 TopKAT Installation Manual for wiring requirements and information.

Figure 35: 024252 Wiring Diagram Models 9852A, 9853A

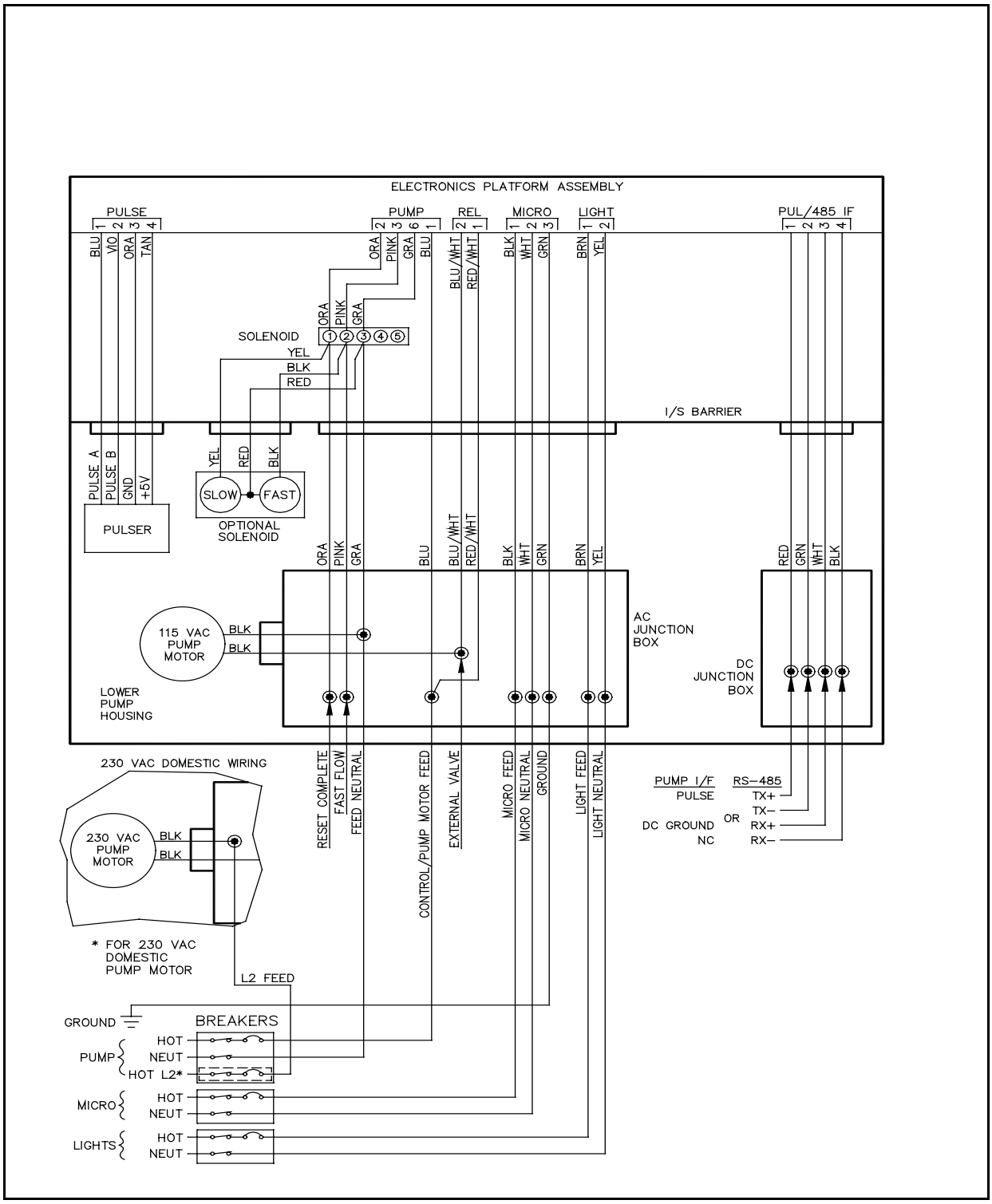

024253 Wiring Diagram Models 9853AHC, 9840A

Notes:1) All wiring and conduit runs must conform with all building/fire codes, all Federal, State, and Local codes, National Electrical Code (NFPA 70), and Automotive and Marine Service Station Code (NFPA 30A) codes and regulations. Installations in Canada must also comply with the Canadian Electrical Code.

2) The Pump motor can be wired as 230 VAC to reduce current draw. See the breakaway view of 230 VAC WIRING in Figure 36 on page 67. All other wiring should remain the same except for the addition of the L2 (requires 230 VAC breaker for control). If connected to an equipment that requires control of the authorization input, the Phase 2 Feed should be switched through a separate relay to prevent false triggering of the authorization signal.

3) To avoid damage to the CPU PC board, all unused wires must be individually capped, and before applying power, you must ensure that the RESET COMPLETE and FAST FLOW wires are not shorted to the conduit or chassis.

4) RESET COMPLETE (switch detect) line can supply 170 mA AC maximum for connecting to FMS circuitry.

5) FAST FLOW line can supply 170 mA AC maximum for remote control or monitoring of the fast flow valve found in the pump.

6) If the CONTROL/PUMP MOTOR FEED line is controlled by a FMS that uses solid state relays, a resistor assembly must be installed between the Control Feed line and Feed Neutral to prevent false triggering of the authorization input. The resistor assembly is 8.2K OHM, 10 Watt (P/N C05818) for 115/230 VAC domestic and 30K OHM, 10 Watt (P/N C06683) for 230 VAC international wiring.

7) If this unit is equipped for 230 VAC operation (international) wire as shown in the standard 115 VAC wiring diagram, the white (WHT) motor wires should be connected to the 230 VAC return wire (Feed Neutral). See breakaway version for international.

8) Second meter and pulser available only on 9840A models.

9) Refer to the wire size chart in the section "Wire Size" on page 56 to determine the wire size for the control wiring.

10) Models 9853AHC and 9840A should not be used with aboveground tanks.

11) If this unit is equipped with a TopKAT option, there will be 6 wires in the DC junction box. Refer to MDE-4319 TopKAT Installation Manual for wiring requirements and information.

Figure 36: 024253 Wiring Diagram Models 9853HC, 9840A

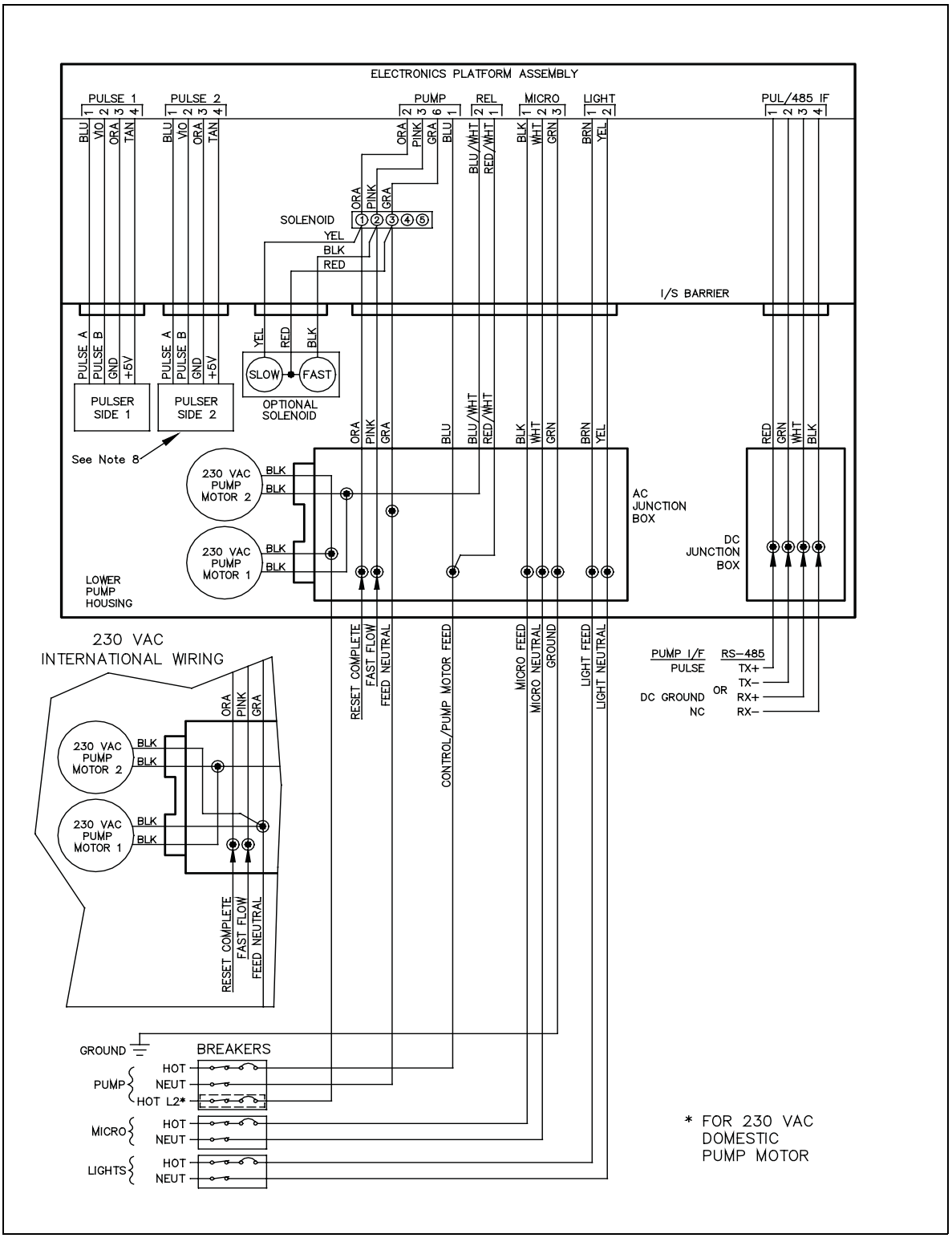

024254 Wiring Diagram Models 9852AX, 9853AX, 9840AX, 9850AX

Notes:1) All wiring and conduit runs must conform with all building/fire codes, all Federal, State, and Local codes, National Electrical Code, (NFPA 70), NFPA 30, and Automotive and Marine Service Station Code (NFPA 30A) codes and regulations. Installations in Canada must also comply with the Canadian Electrical Code.

2) The input line CONTROL/SUBM FEED is comprised of two wires which are tied together at the factory.

3) To avoid damage to the CPU PC board, all unused wires must be individually capped, and before applying power, you must verify that the RESET COMPLETE, FAST FLOW, SUBM. STARTER DRIVE, SLOW and FAST SATELLITE RETURN wires are not shorted to the conduit or chassis.

4) SUBM. STARTER DRIVE line can supply 300 mA AC maximum to control submersible starter relays. This line must not be directly connected to a submersible pump.

5) External submersible relays are required unless the remote dispenser is equipped with the submersible drive relay option. The submersible drive relay option provides a SUBM PUMP DRIVE line (Blue 14) which can directly drive a submersible pump up to 3/4 HP at 115 VAC or 1-1/2 HP at 230 VAC. The 14 AWG SUBM FEED and SUBM PUMP DRIVE wires are always present. Ensure that the submersible drive relay option is installed prior to wiring. The power supplied to the CONTROL/ SUBM FEED must be able to handle the load of the submersible pump.

6) RESET COMPLETE (switch detect) line can supply 170 mA AC maximum for connecting to FMS circuitry and in applications where control of a remote slow flow valve (satellite) is required.

7) FAST FLOW line can supply 170 mA AC maximum and is provided to allow for control of a satellite along with remote control or monitoring of the fast flow valve found in the pump.

8) FAST SAT. RETURN and SLOW SAT. RETURN lines are used when the remote dispenser is supplied with satellite piping and connected to the satellite in a manner to prevent both the remote dispenser and satellite from dispensing product simultaneously. See Figure 37 on page 70 for correct connection of these lines. These lines are not connected when they leave the factory.

9) If the CONTROL/SUBM FEED line is controlled by an FMS that uses solid state relays, a resistor assembly must be installed between the Control Feed line and Feed Neutral to prevent false triggering of the authorization input. The resistor assembly is 8.2K OHM, 10 Watt (P/N C05818) for 115/230 VAC domestic and 30K OHM, 10 Watt (P/N C06683) for 230 VAC international wiring.

10) When used with an aboveground tank, the valve mounted at the tank MUST NOT be connected to the RESET COMPLETE or SUBM STARTER DRIVE lines. If the optional internal relay kit is installed AND the valve's current draw does not exceed 1 Amp, the valve can be connected to the SUBM PUMP DRIVE line. Else, it should be driven from the external submersible starter relay. In all cases, the tank valve must operate at the same voltage as the submersible pump.

11) If this unit is equipped for 230 VAC operation (international), wire as shown in the standard 115 VAC wiring layout diagram.

12) Second meter and pulser available only on 9840A models.

13) Refer to the wire size chart in the section "Wire Size" on page 56 to determine the wire size for the control wiring.

14) If this unit is equipped with a TopKAT option, there will be six wires in the DC junction box. Refer to MDE-4319 TopKAT Installation Manual for wiring requirements and information.

15) When multiple dispensers are used to control a common submersible starter relay or pump, and the 9800 is controlled (authorized) through the Control/Subm Feed line (as in the case of some FMS), it is important that the lines from the 9800 to the submersible equipment be isolated from each other. This can be accomplished by running the submersible control lines through a secondary set of relay contacts in the FMS. If a secondary set of contacts is not available, external control relays must be used between the 9800 and the submersible starter relay or pump. Another option is to provide a separate submersible starter relay for each hose outlet. The submersible drive lines from the 9800 cannot be tied together, in any circumstance.

Figure 37: 024254 Wiring Diagram Models 9852AX, 9853AX, 9840AX, 9850AX

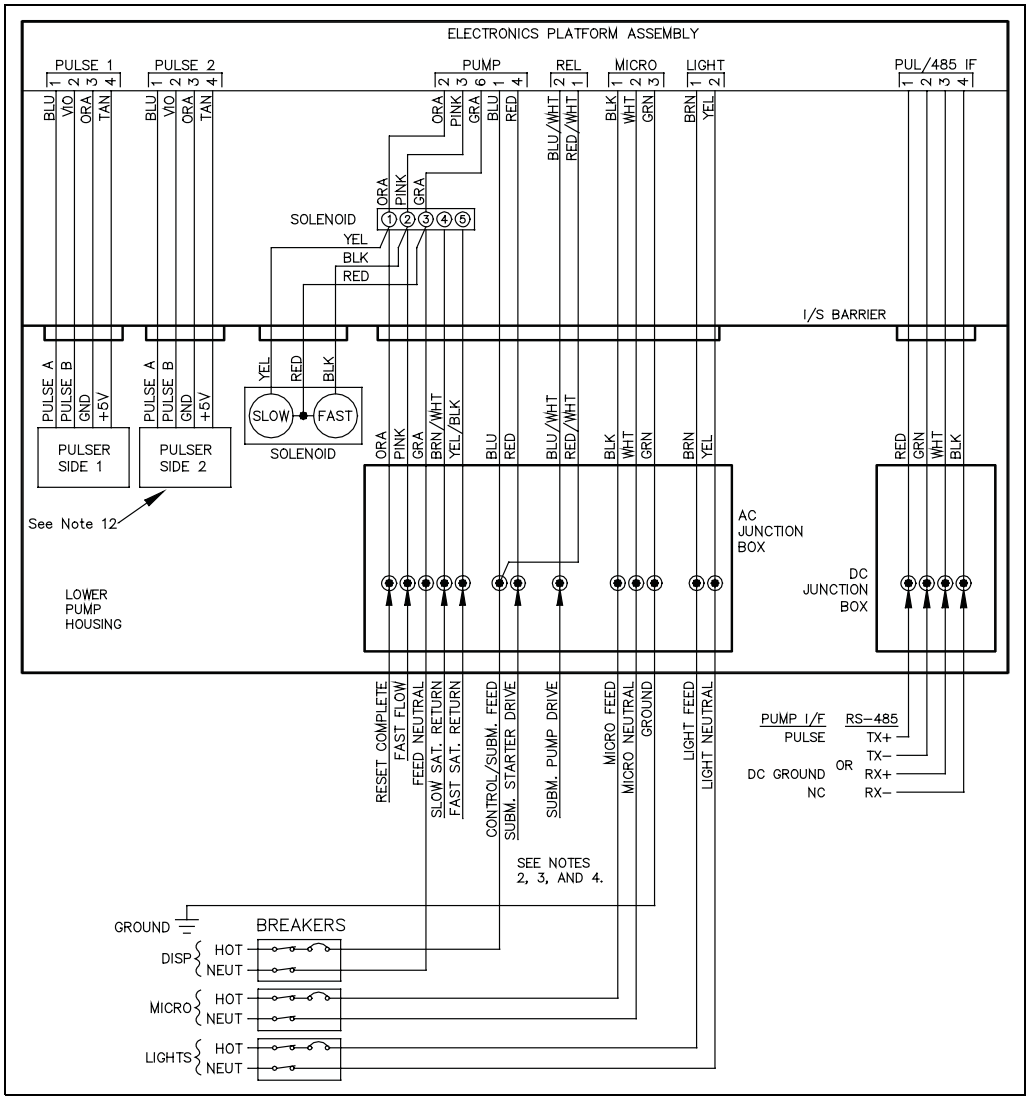

024255 Wiring Diagram Models 9852AXTW1, 9852AXTW2, 9853AXTW1, 9853AXTW2, 9850AXTW1, 9850AXTW2

Notes:1) All wiring and conduit runs must conform with all building/fire codes, all Federal, State, and Local codes, National Electrical Code, (NFPA 70), NFPA 30, and Automotive and Marine Service Station Code (NFPA 30A) codes and regulations. Installations in Canada must also comply with the Canadian Electrical Code.

2) The input line CONTROL/SUBM FEED is comprised of two wires which are tied together at the factory.

CAUTION

To avoid damage to the CPU PC board, all unused wires must be individually capped, and before applying power, you must verify that the RESET COMPLETE, FAST FLOW, SUBM. STARTER DRIVE, SLOW and FAST SATELLITE RETURN wires are not shorted to conduit or chassis.

3) SUBM. STARTER DRIVE line can supply 300 mA AC maximum to control submersible starter relays.

CAUTION

The SUBM. STARTER DRIVE line must not be directly connected to a pump.

4) External submersible relays are required unless the remote dispenser is equipped with the submersible drive relay option. The submersible drive relay option provides a SUBM PUMP DRIVE line (Blue 14) which can directly drive a submersible pump up to 3/4 HP at 115 VAC or 1-1/2 HP at 230 VAC. The 14 AWG SUBM FEED and SUBM PUMP DRIVE wires are always present. Ensure that the submersible drive relay option is installed prior to wiring. The power supplied to the CONTROL/ SUBM FEED must be able to handle the load of the submersible pump.

5) RESET COMPLETE (switch detect) line can supply 170 mA AC maximum for connecting to FMS circuitry and in applications where control of a remote slow flow valve (satellite) is required.

6) FAST FLOW line can supply 170 mA AC maximum to allow for control of a satellite along with remote control or monitoring of the fast flow valve found in the pump.

7) FAST SAT. RETURN and SLOW SAT. RETURN lines are used when the remote dispenser is supplied with satellite piping. They are connected to the satellite such that the remote dispenser and satellite do not dispense product simultaneously. Refer to *Figure 38 on page 73* *for the correct connection of these lines. These lines are not connected when they leave the factory.*

8) If the CONTROL/PUMP MOTOR FEED line is controlled by an FMS that uses solid state relays, a resistor assembly must be installed between the Control Feed line and Feed Neutral to prevent false triggering of the authorization input. The resistor assembly is 8.2K OHM, 10 Watt (P/N C05818) for 115/230 VAC domestic and 30K OHM, 10 Watt (P/N C06683) for 230 VAC international wiring.

9) Use the chart in the section "Wire Size" on page 56 to determine the wire size for the control wiring.

10) When used with an aboveground tank, the valve mounted at the tank MUST NOT be connected to the RESET COMPLETE or SUBM STARTER DRIVE lines. If the optional internal relay kit is installed and the valve's current draw does not exceed 1 Amp, the valve can be connected to the SUBM PUMP DRIVE line. Else, it should be driven from the external submersible starter relay. In all cases, the tank valve must operate at the same voltage as the submersible pump.

11) If this unit is equipped for 230 VAC operation (international), wire as shown in the standard 115 VAC wiring layout diagram.

12) If this unit is equipped with a TopKAT option, there will be six wires in the DC junction box. Refer to MDE-4319 TopKAT Installation Manual for wiring requirements and information.

13) When multiple dispensers are used to control a common submersible starter relay or pump, and the 9800 is controlled (authorized) through the "Control/Subm Feed¨ line (as in the case of some FMS), the lines from the 9800 to the submersible equipment must be isolated from each other. This can be accomplished by running the submersible control lines through a secondary set of relay contacts in the FMS. If a secondary set of contacts is not available, external control relays must be used between the 9800 and the submersible starter relay or pump. Another option is to provide a separate submersible starter relay for each hose outlet. The submersible drive lines from the 9800 cannot be tied together, in any circumstance.

Figure 38: 024255 Wiring Diagram Models 9852AXTW1, 9852AXTW2, 9853AXTW1, 9853AXTW2, 9850AXTW1, 9850AXTW2

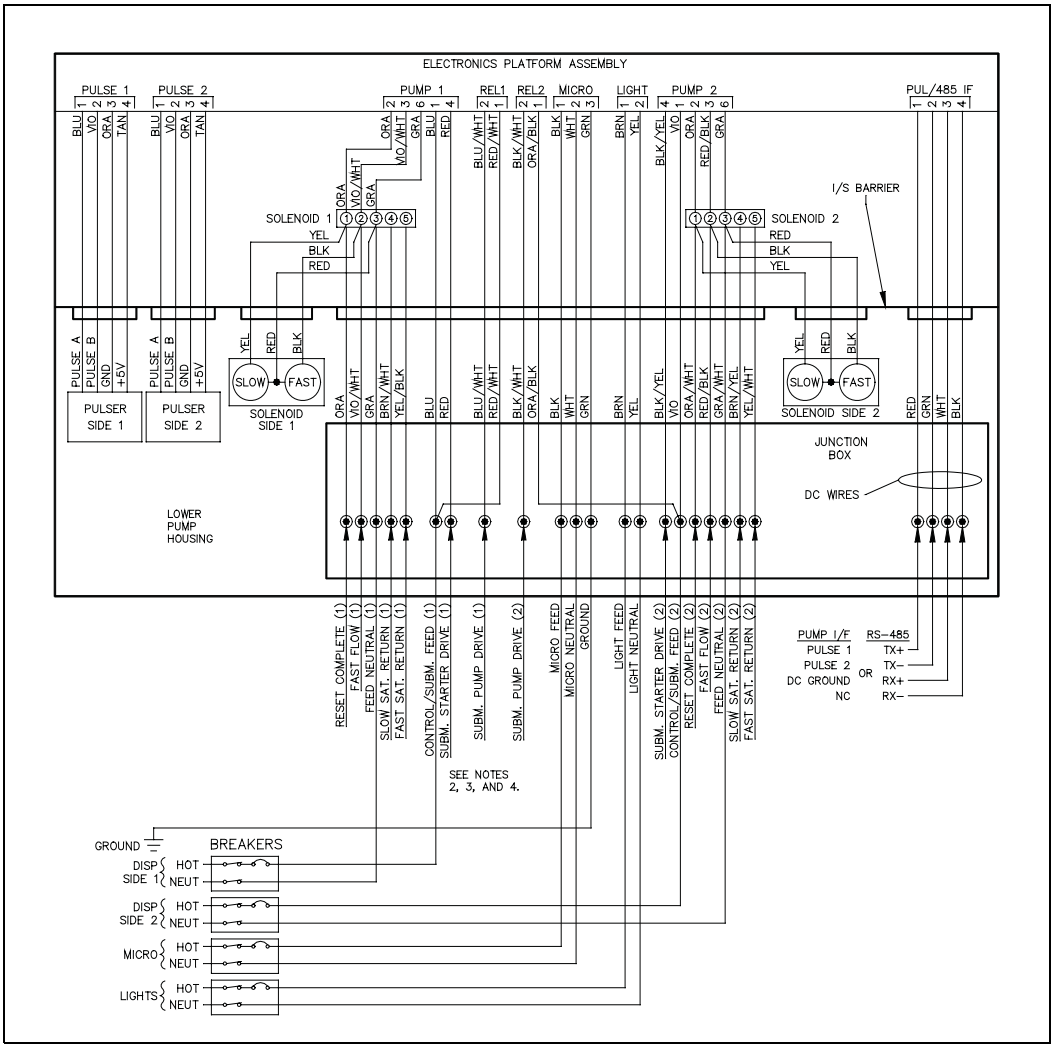

024256 Wiring Diagram Models 9852ATW2, 9853ATW2, 9853ATW1M

Notes:1) All wiring and conduit runs must conform with all building/fire codes, all Federal, State, and Local codes, National Electrical Code, (NFPA 70), NFPA 30, and Automotive and Marine Service Station Code (NFPA 30A) codes and regulations. Installations in Canada must also comply with the Canadian Electrical Code.

*2) The pump motor can be wired as 230 VAC to reduce current draw. See breakaway view of **230 VAC WIRING** in Figure 39 on page 75. All other wiring should remain the same except for the addition of the L2 (requires 230 VAC breaker for control). If connected to equipment requiring control of the authorization input, the Phase 2 Feed should be switched through a separate relay to prevent false triggering of the authorization signal.*

CAUTION

To avoid damage to the CPU PC board, all unused wires must be individually capped, and before applying power, you must verify that the RESET COMPLETE and FAST FLOW wires are not shorted to the conduit or chassis.

3) RESET COMPLETE (switch detect) line can supply 170 mA AC maximum for connecting to FMS circuitry.

4) FAST FLOW line can supply 170 mA AC maximum for remote control or monitoring of the fast flow valve found in the pump.

5) If the CONTROL/PUMP MOTOR FEED line is controlled by a FMS that uses solid state relays, a resistor assembly must be installed between the Control Feed line and Feed Neutral to prevent false triggering of the authorization input. The resistor assembly is 8.2K OHM, 10 Watt (P/N C05818) for 115/230 VAC domestic and 30K OHM, 10 Watt (P/N C06683) for 230 VAC international wiring.

6) When used with an aboveground tank, the anti-siphon valve mounted on the tank must be driven from the EXTERNAL VALVE line, have the same operating voltage as the pump motor, and the current draw must not exceed 1 Amp. If these conditions are not met, it must be controlled by an external relay driven from the EXTERNAL VALVE line. DO NOT connect the anti-siphon valve or external relay to the RESET COMPLETE line. DO NOT connect two or more EXTERNAL VALVE lines together. If more than one pump is drawing from the tank, separate anti-siphon valves must be installed, or each EXTERNAL VALVE line must operate an external relay which then operates the valve.

7) Refer to the chart in the section "Wire Size" on page 56 to determine the wire size for the control wiring.

8) If this unit is equipped for 230 VAC operation (international), wire as shown in the standard 115 VAC wiring layout diagram.

9) If this unit is equipped with a TopKAT option, there will be six wires in the DC junction box. Refer to MDE-4319 TopKAT Installation Manual for wiring requirements and information.

10) Model 9853ATW1M should not be used with aboveground tanks.

Figure 39: 024256 Wiring Diagram Models 9852ATW2, 9853ATW2, 9853ATW1M

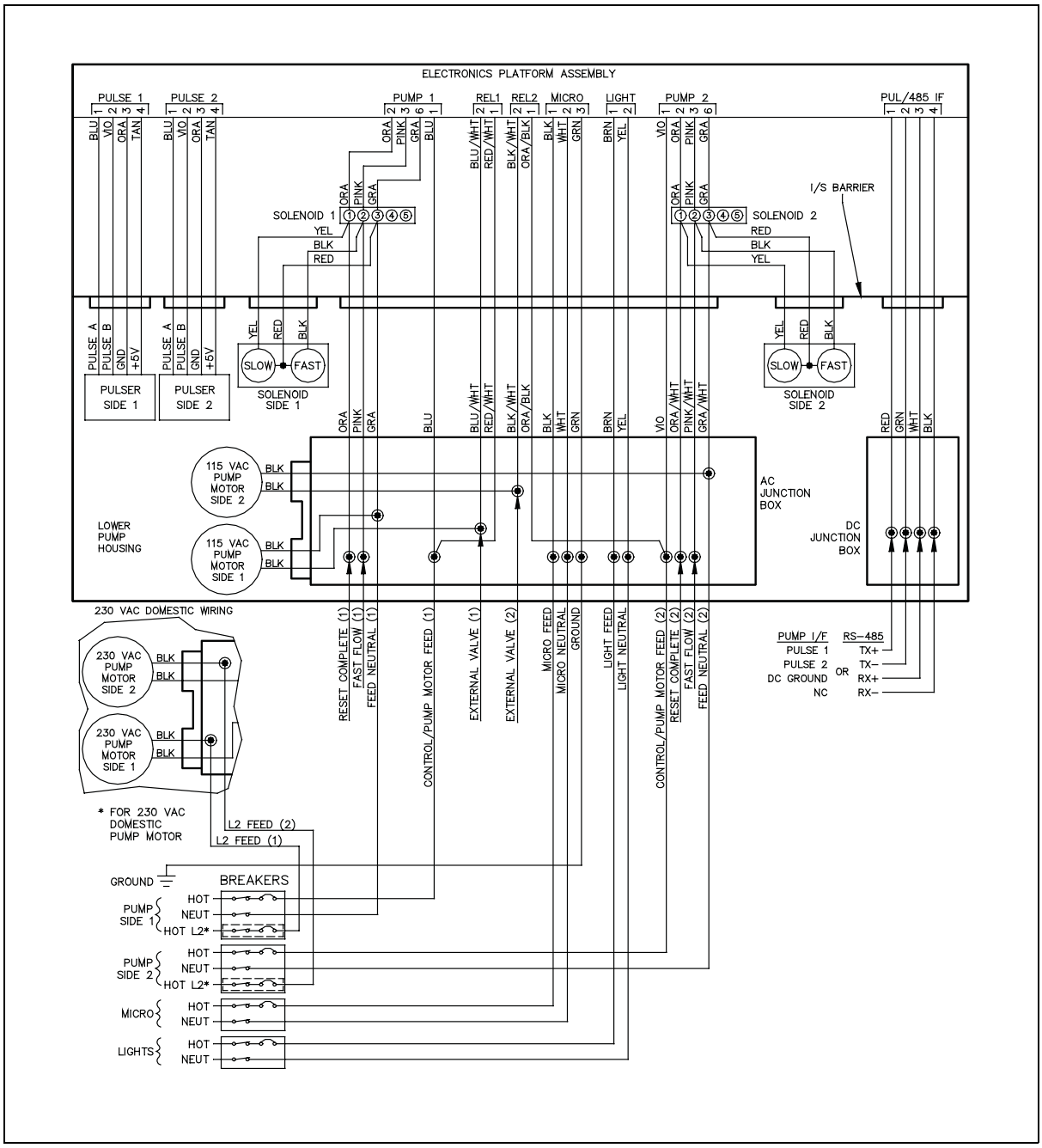

024257 Wiring Diagram Models Satellite 215A, Satellite 216A

Notes:1) All wiring and conduit runs must conform with all building/fire codes, all Federal, State, and Local codes, National Electrical Code, (NFPA 70), NFPA 30, and Automotive and Marine Service Station Code (NFPA 30A) codes and regulations. Installations in Canada must also comply with the Canadian Electrical Code.

2) See Weights and Measures Handbook 44 to determine which mode of satellite operation is relevant for your application. In many cases, the satellite must be wired such that it cannot dispense product while the master remote dispenser is dispensing and vice versa. Use the correct wiring diagram for your application.

3) The input line CONTROL/SUBM FEED is comprised of two wires which are tied together at the factory.

CAUTION

To avoid damage to the CPU PC board, all unused wires must be individually capped, and before applying power, you must verify that the RESET COMPLETE, FAST FLOW, SUBM. STARTER DRIVE, SLOW and FAST SATELLITE RETURN wires are not shorted to conduit or chassis.

4) SUBM. STARTER DRIVE line can supply 300 mA AC maximum to control submersible starter relays.

CAUTION

The SUBM. STARTER DRIVE line must not be directly connected to a submersible pump.

5) External submersible relays are required unless the remote dispenser is equipped with the submersible drive relay option. The submersible drive relay option provides a SUBM PUMP DRIVE line (Blue 14) that can directly drive a submersible pump up to 3/4 HP at 115 VAC or 1-1/2 HP at 230 VAC. The 14 AWG SUBM FEED and SUBM PUMP DRIVE wires are always present. Ensure that the submersible drive relay option is installed prior to wiring. The power supplied to the CONTROL/ SUBM FEED must be able to handle the load of the submersible pump.

6) If the CONTROL/SUBM FEED line is controlled by a FMS using solid state relays, a resistor assembly must be installed between the Control Feed line and Feed Neutral to prevent false triggering of the authorization input. The resistor assembly is 8.2K OHM, 10 Watt (P/N C05818) for 115/230 VAC domestic and 30K OHM, 10 Watt (P/ N C06683) for 230 VAC international wiring.

7) The FAST FLOW line (pink wire) is disconnected when it is supplied from the factory. It must be connected, in the upper junction box, to the pink wire (fast flow control) originating from the electronic platform assembly.

8) If you are using a 9800A and satellite in an application where both master and satellite cannot dispense product at the same time, a minor change in the 9800A wiring must be made. In the solenoid J-Box, disconnect the solenoid yellow wire from the two orange wires (leave the two orange wires connected together). Connect the solenoid yellow wire to the 18 AWG brown wire. In the solenoid junction box, disconnect the solenoid black wire from the two pink wires (leave the two pink wires connected together, as described in note 5). Connect the solenoid black wire to the 18 AWG yellow wire. Wire the remote dispenser to the satellite as shown in the wiring diagram labeled Non-Simultaneous (see Figure 40 on page 78).

9) If this unit is equipped for 230 VAC operation (international), wire as shown in the standard 115 VAC wiring layout diagram.

10) These wiring diagrams are intended only to show the connections between the satellite and the dispenser. See wiring diagram for master dispenser (as per the model number) for applicable warnings and proper connection of all wires.

Figure 40: 024257 Wiring Diagram Models Satellite 215A, Satellite 216A

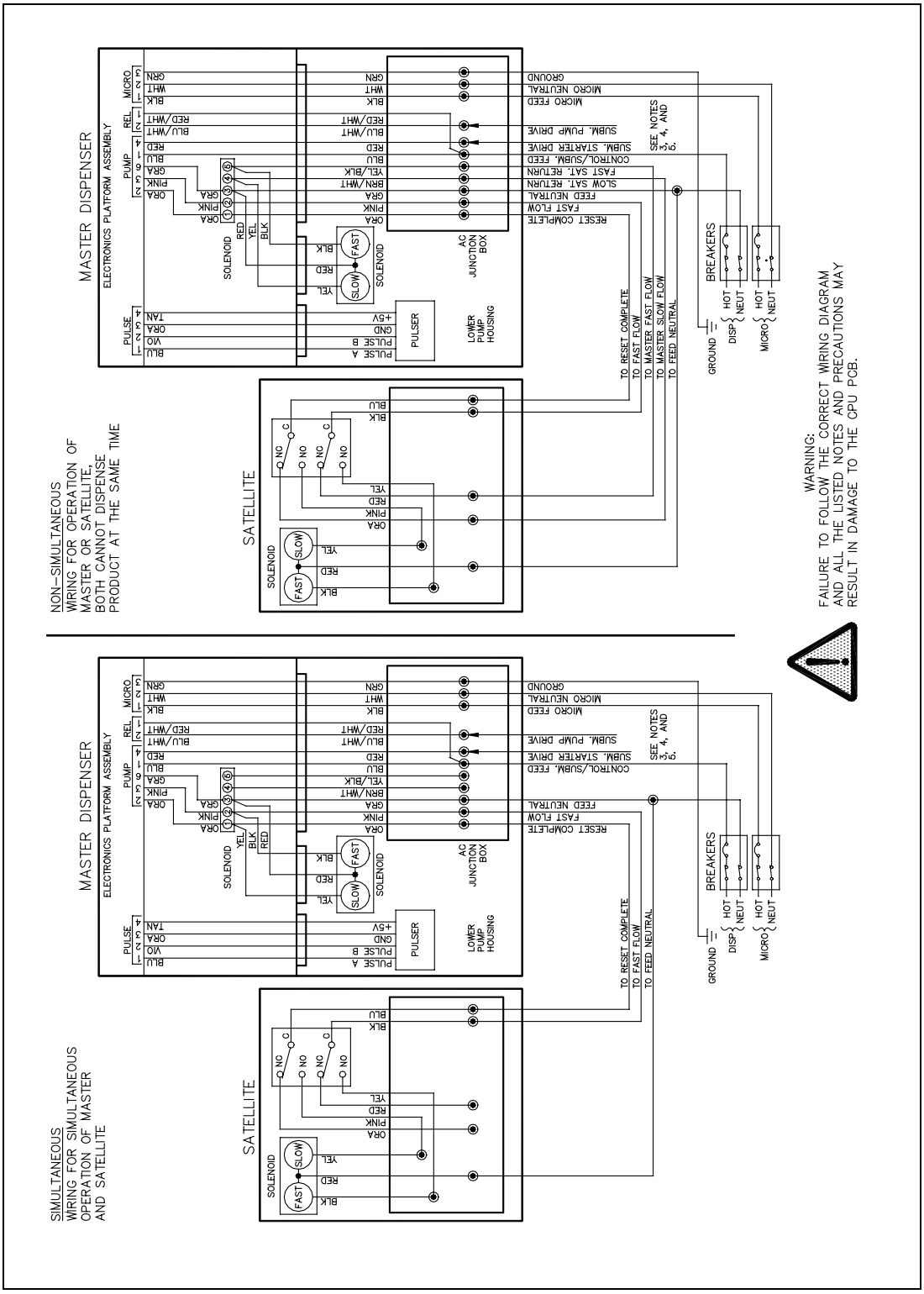

024258 Wiring Diagram Model 9850A

Notes:1) All wiring and conduit runs must conform with all building/fire codes, all Federal, State, and Local codes, National Electrical Code, (NFPA 70), NFPA 30, and Automotive and Marine Service Station Code (NFPA 30A) codes and regulations. Installations in Canada must also comply with the Canadian Electrical Code.

2) The pump motor must be wired as 230 VAC to reduce current draw (requires 230 VAC breaker for control). If it is connected to an equipment that requires control of the authorization input, the Phase 2 Feed should be switched through a separate relay to prevent false triggering of the authorization signal.

3) To avoid damage to the CPU PC board, all unused wires must be individually capped, and before applying power, you must verify that the RESET COMPLETE and FAST FLOW wires are not shorted to the conduit or chassis.

4) RESET COMPLETE (switch detect) line can supply 170 mA AC maximum for connecting to FMS circuitry and in applications where control of a remote slow flow valve (satellite) is required.

5) FAST FLOW line can supply 170 mA AC maximum to allow for remote control or monitoring of the fast flow valve found in the pump.

6) If used with an aboveground tank, a valve is required on the suction side of the pump.

7) When used with an aboveground tank, the anti-siphon valve mounted on the tank must be driven from the EXTERNAL VALVE line, have the same operating voltage as the pump motor, and the current draw must not exceed 1 Amp. If these conditions are not met, it must be controlled by an external relay driven from the EXTERNAL VALVE line. DO NOT connect the anti-siphon valve or external relay to the RESET COMPLETE line. DO NOT connect two or more EXTERNAL VALVE lines together. If more than one pump is drawing from the tank, separate anti-siphon valves must be installed, or each EXTERNAL VALVE line must operate an external relay which then operates the valve.

8) FAST SAT. RETURN and SLOW SAT. RETURN lines are used when the dispenser is supplied with satellite piping and connected to the satellite such that the dispenser and satellite do not dispense product simultaneously. See the Figure 41 on page 80 for the correct connection of these lines. These lines are not connected when they leave the factory.

9) If the CONTROL PUMP MOTOR FEED line is controlled by an FMS that uses solid state relays, a resistor assembly must be installed between the Control Feed line and Feed Neutral to prevent false triggering of the authorization input. The resistor assembly is 8.2K OHM, 10 Watt (P/N C05818) for 230 VAC domestic and 30K OHM, 10 Watt (P/N C06683) for 230 VAC international wiring.

10) See the breakaway view in Figure 41 on page 80 for international wiring.

Figure 41: 024258 Wiring Diagram Model 9850A

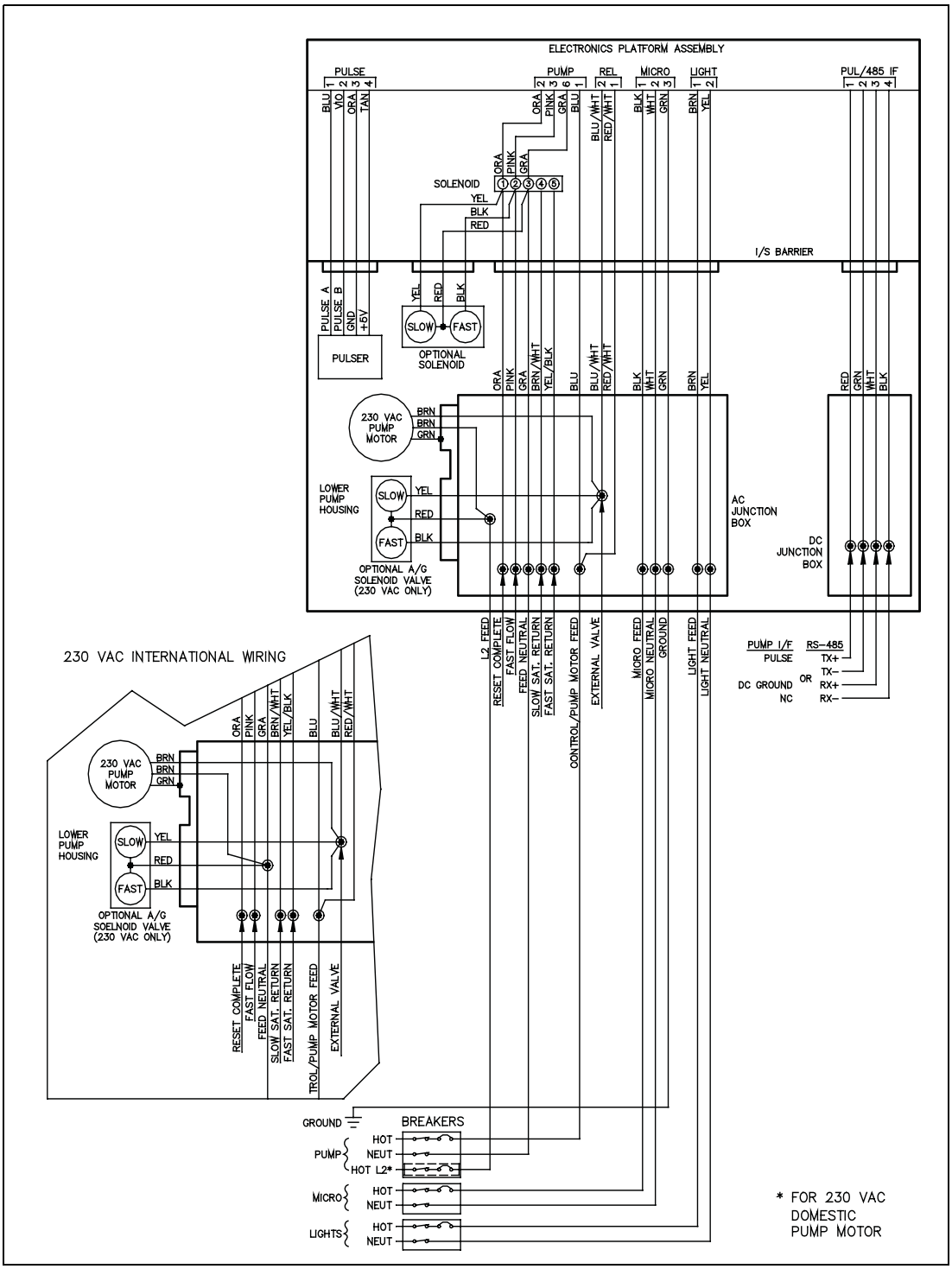

024294 Wiring Diagram Models 9853A 380VAC

Notes:1) All wiring and conduit runs must conform with all building/fire codes, all Federal, State, and Local codes, National Electrical Code, (NFPA 70), NFPA 30, and Automotive and Marine Service Station Code (NFPA 30A) codes and regulations. Installations in Canada must also comply with the Canadian Electrical Code.

CAUTION

To avoid damage to the CPU PC board, all unused wires must be individually capped, and before applying power, you must verify that the RESET COMPLETE and FAST FLOW wires are not shorted to conduit or chassis.

2) RESET COMPLETE (switch detect) line can supply 170 mA AC maximum for connecting to FMS circuitry.

3) FAST FLOW line can supply 170 mA AC maximum for remote control or monitoring of the fast flow valve found in the pump.

4) If the CONTROL/PUMP MOTOR FEED line is controlled by a FMS that uses solid state relays, a resistor assembly must be installed between the Control Feed line and Feed Neutral to prevent false triggering of the authorization input. The resistor assembly is 10 Watt (P/N C06683).

5) Refer to the chart in the section "Wire Size" on page 56 to determine the wire size for the control wiring.

6) If this unit is equipped with a TopKAT option, there will be six wires in the DC junction box. Refer to MDE-4319 TopKAT Installation Manual for wiring requirements and information.

7) When used with an aboveground tank, the anti-siphon valve mounted on the tank must be driven from the EXTERNAL VALVE line, have the same operating voltage as the pump motor, and the current draw must not exceed 1 Amp. If these conditions are not met, it must be controlled by an external relay driven from the EXTERNAL VALVE line. DO NOT connect the anti-siphon valve or external relay to the RESET COMPLETE line. DO NOT connect two or more EXTERNAL VALVE lines together. If more than one pump is drawing from the tank, separate anti-siphon valves must be installed, or each EXTERNAL VALVE line must operate an external relay which then operates the valve.

Figure 42: 024294 Wiring Diagram Models 9853A 380 VAC

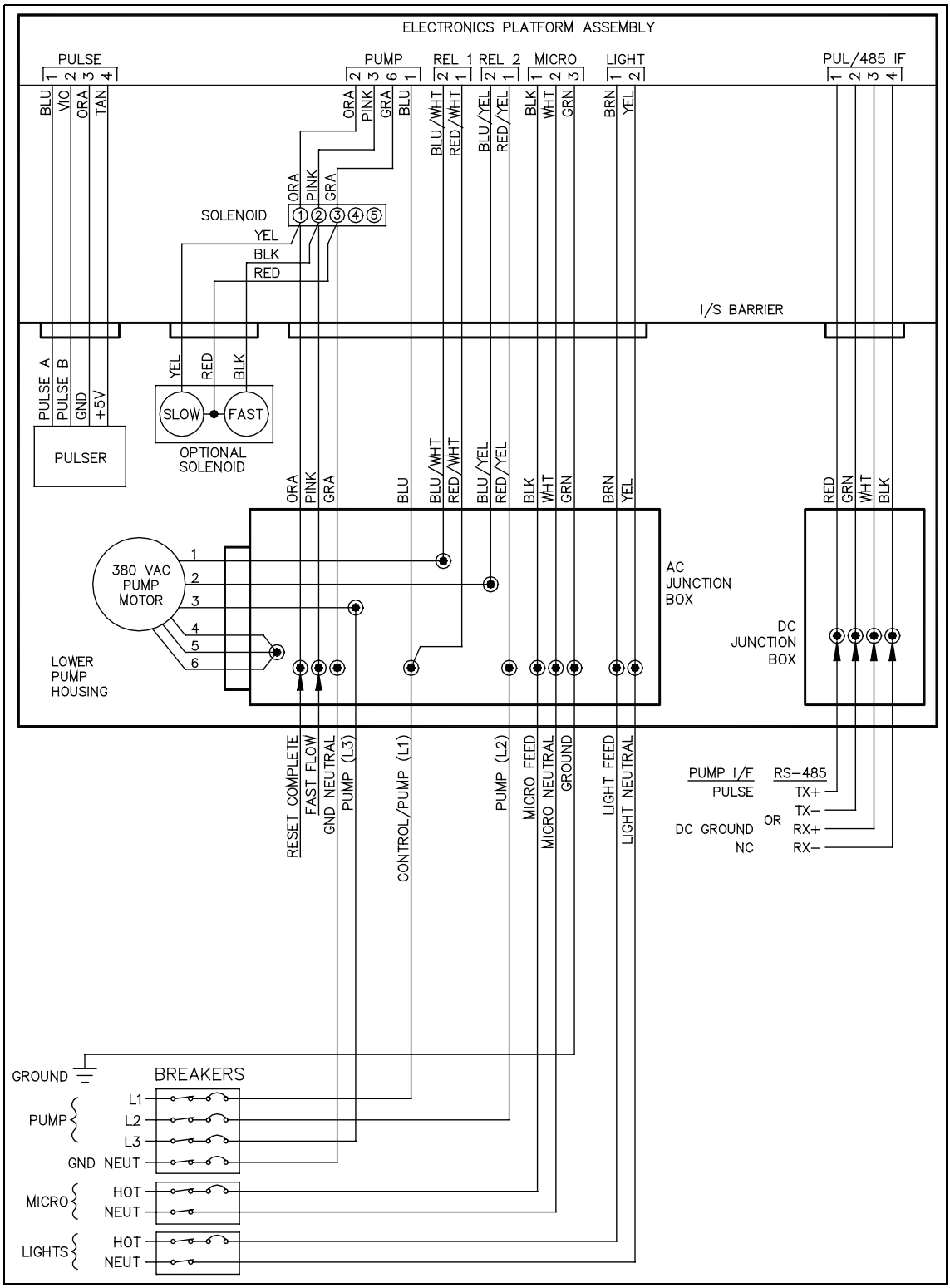

024295 Wiring Diagram Models 9853AHC 380 VAC, 9840A 380 VAC

Notes:1) All wiring and conduit runs must conform with all building/fire codes, all Federal, State, and Local codes, National Electrical Code, (NFPA 70), NFPA 30, and Automotive and Marine Service Station Code (NFPA 30A) codes and regulations. Installations in Canada must also comply with the Canadian Electrical Code.

CAUTION

To avoid damage to the CPU PC board, all unused wires must be individually capped, and before applying power, you must verify that the RESET COMPLETE and FAST FLOW wires are not shorted to conduit or chassis.

2) RESET COMPLETE (switch detect) line can supply 170 mA AC maximum for connecting to FMS circuitry.

3) FAST FLOW line can supply 170 mA AC maximum for remote control or monitoring of the fast flow valve found in the pump.

4) If the CONTROL/PUMP MOTOR FEED line is controlled by a FMS that uses solid state relays, a resistor assembly must be installed between the Control Feed line and Feed Neutral to prevent false triggering of the authorization input. The resistor assembly is 30K OHM, 10 Watt (P/N C06683).

5) Second meter and pulser available only on 9840A models.

6) Refer to the wire size chart in the section *"Wire Size" on page 56* *(230VAC section) to determine the wire size for the control wiring.*

7) Models 9853AHC and 9840A should not be used with aboveground tanks.

8) If this unit is equipped with a TopKAT option, there will be six wires in the DC junction box. Refer to MDE-4319 TopKAT Installation Manual for wiring requirements and information.

Figure 43: 024295 Wiring Diagram Models 9853AHC 380 VAC, 9840A 380 VAC

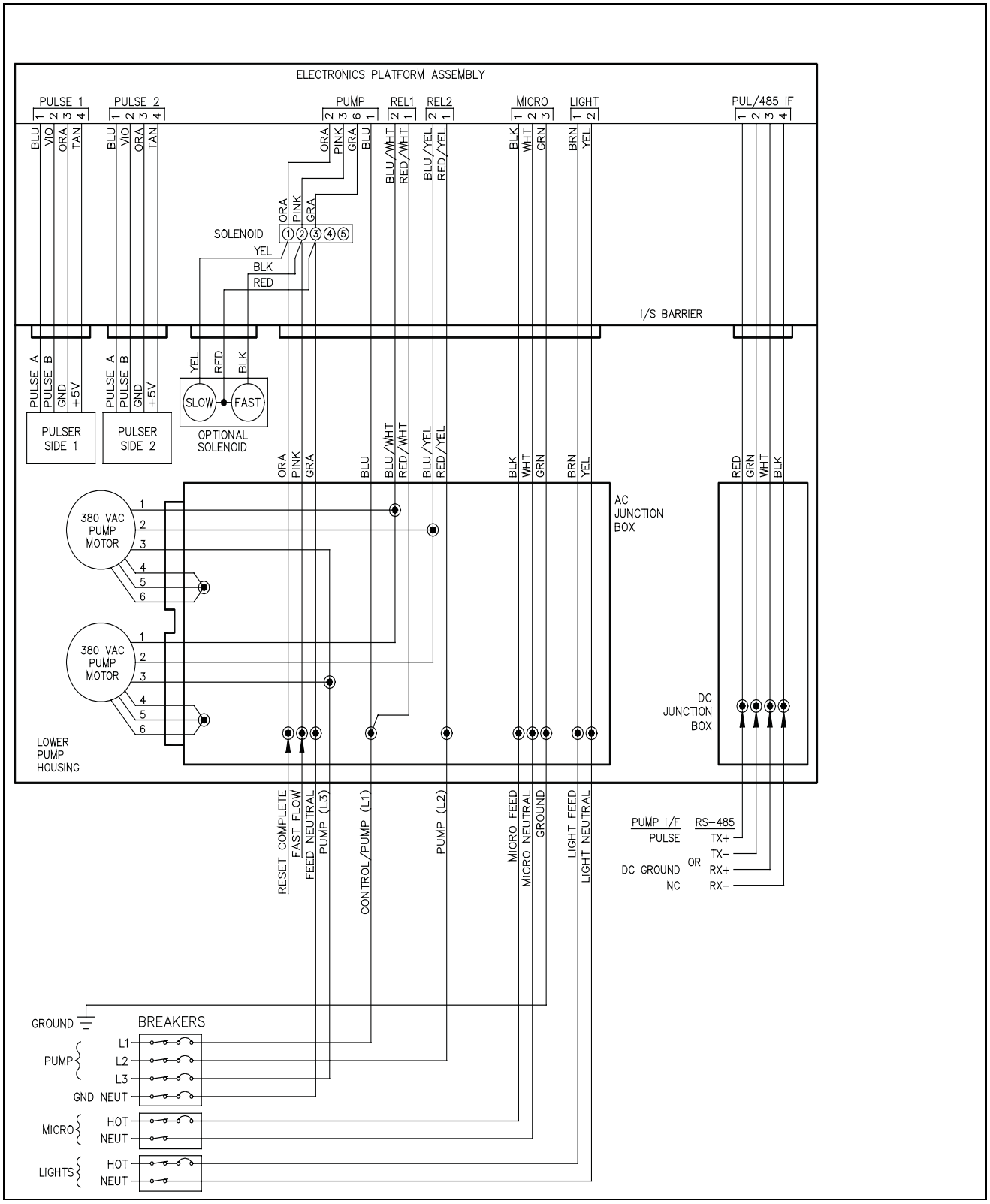

024297 Wiring Diagram Models 9853ATW2 380 VAC, 9853ATW1M 380 VAC

Notes:1) All wiring and conduit runs must conform with all building/fire codes, all Federal, State, and Local codes, National Electrical Code, (NFPA 70), NFPA 30, and Automotive and Marine Service Station Code (NFPA 30A) codes and regulations. Installations in Canada must also comply with the Canadian Electrical Code.

CAUTION

To avoid damage to the CPU PC board, all unused wires must be individually capped, and before applying power, you must verify that the RESET COMPLETE and FAST FLOW wires are not shorted to conduit or chassis.

2) RESET COMPLETE (switch detect) line can supply 170 mA AC maximum for connecting to FMS circuitry.

3) FAST FLOW line can supply 170 mA AC maximum for remote control or monitoring of the fast flow valve found in the pump.

4) If the CONTROL/PUMP MOTOR FEED line is controlled by an FMS that uses solid state relays, a resistor assembly must be installed between the Control Feed line and Feed Neutral to prevent false triggering of the authorization input. The resistor assembly is 10 Watt (P/N C06683).

5) Refer to the wire size chart in the section "Wire Size" on page 56 (230VAC section) to determine the wire size for the control wiring.

6) If this unit is equipped with a TopKAT option, there will be six wires in the DC junction box. Refer to MDE-4319 TopKAT Installation Manual for wiring requirements and information.

7) Model 9853ATW1M should not be used with aboveground tanks.

Figure 44: 024297 Wiring Diagram Models 9853ATW2 380 VAC, 9852ATW1M 380 VAC

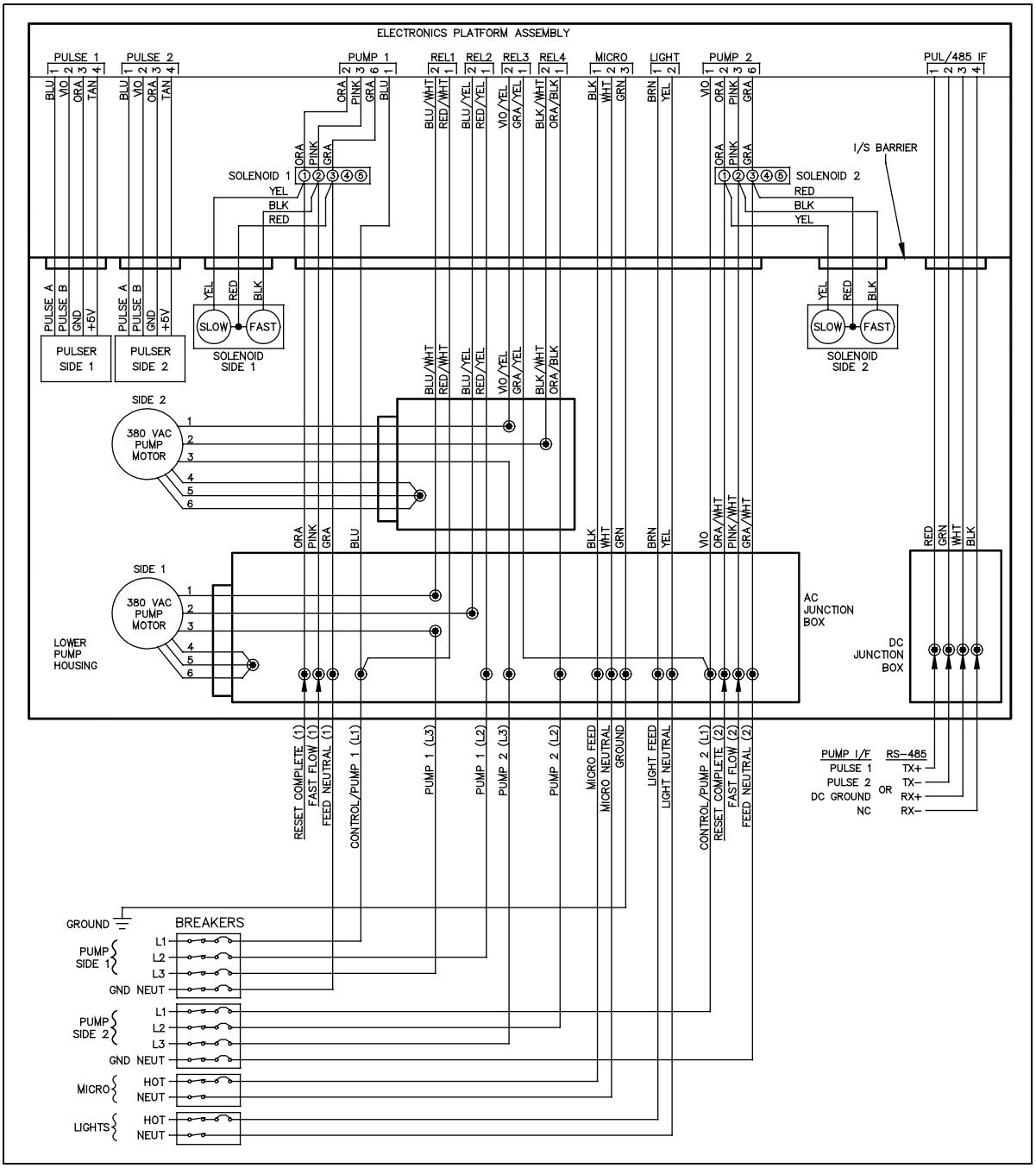

024319 Wiring Diagram Models Satellite 215A Front Load, Satellite 216A Front Load

Notes:1) All wiring and conduit runs must conform with all building/fire codes, all Federal, State, and Local codes, National Electrical Code, (NFPA 70), NFPA 30, and Automotive and Marine Service Station Code (NFPA 30A) codes and regulations. Installations in Canada must also comply with the Canadian Electrical Code.

2) See Weights and Measures Handbook 44 to determine which mode of satellite operation is relevant for your application. In many cases, the satellite must be wired such that it cannot dispense product while the master remote dispenser is dispensing and vice versa. Use the correct wiring diagram for your application.

3) The input line CONTROL/SUBM FEED is comprised of two wires which are tied together at the factory.

CAUTION

To avoid damage to the CPU PC board, all unused wires must be individually capped, and before applying power, you must verify that the RESET COMPLETE, FAST FLOW, SUBM. STARTER DRIVE, SLOW and FAST SATELLITE RETURN wires are not shorted to conduit or chassis.

4) SUBM. STARTER DRIVE line can supply 300 mA AC maximum to control submersible starter relays.

CAUTION

The SUBM. STARTER DRIVE line must not be directly connected to a submersible pump.

5) External submersible relays are required unless the remote dispenser is equipped with the submersible drive relay option. The submersible drive relay option provides a SUBM PUMP DRIVE line (Blue 14) which can directly drive a submersible pump up to 3/4 HP at 115 VAC or 1-1/2 HP at 230 VAC. The 14 AWG SUBM FEED and SUBM PUMP DRIVE wires are always present. Ensure that the submersible drive relay option is installed prior to wiring. The power supplied to the CONTROL/ SUBM FEED must be able to handle the load of the submersible pump.

6) If the CONTROL/SUBM FEED line is controlled by an FMS that uses solid state relays, a resistor assembly must be installed between the Control Feed line and Feed Neutral to prevent false triggering of the authorization input. The resistor assembly is 8.2K OHM, 10 Watt (P/N C05818) for 115/230 VAC domestic and 30K OHM, 10 Watt (P/N C06683) for 230 VAC international wiring.

7) The FAST FLOW line (pink wire) is supplied from the factory disconnected. It must be connected, in the upper junction box, to the pink wire (fast flow control) originating from the electronic platform assembly.

8) If you are using a Gasboy 9800A and satellite in an application where both master and satellite cannot dispense product at the same time, a minor change in the 9800A wiring must be made. In the solenoid J-Box, disconnect the solenoid yellow wire from the two orange wires (leave the two orange wires connected together). Connect the solenoid yellow wire to the 18 AWG brown wire. In the solenoid junction box, disconnect the solenoid black wire from the two pink wires (leave the two pink wires connected together, as described in note 5). Connect the solenoid black wire to the 18 AWG yellow wire. Wire the remote dispenser to the satellite as shown in the wiring diagram labeled Non-Simultaneous (see Figure 45 on page 89).

9) If this unit is equipped for 230 VAC operation (international), wire as shown in the standard 115 VAC wiring layout diagram.

10) These wiring diagrams are intended only to show the connections between the satellite and the dispenser. See wiring diagram for master dispenser (as per the model number) for applicable warnings and proper connection of all wires.

Figure 45: 024319 Wiring Diagram Models Satellite 215A Front Load, Satellite 216A Front Load

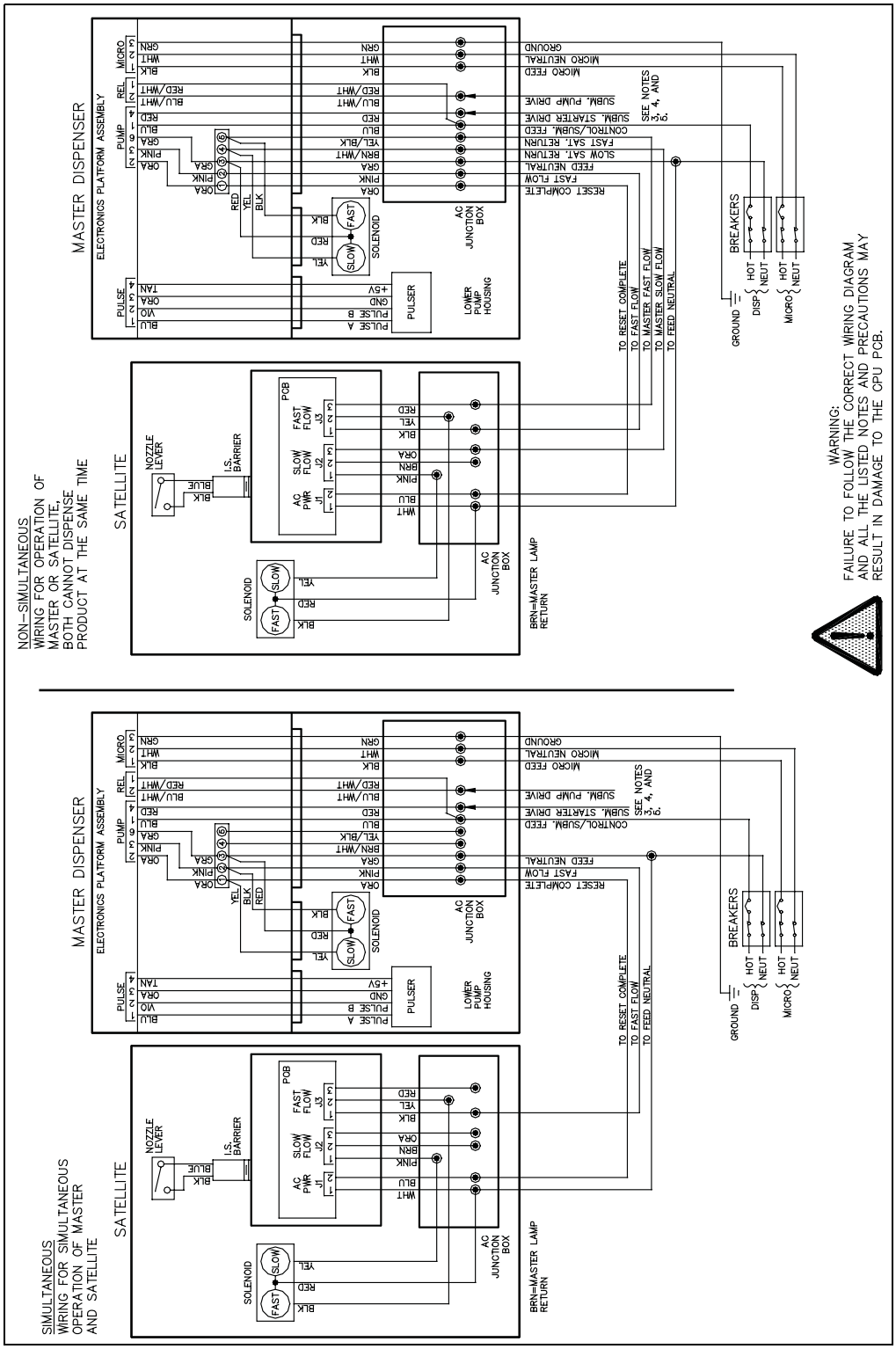

Wiring Diagrams for 9800Q

While wiring pumps/dispensers, ensure that you refer to the appropriate wiring diagram and follow all notes.

CAUTION

Failure to follow the correct wiring diagram and all the listed notes and precautions may result in damage to the CPU PCB.

Wiring diagrams are presented in numerical order. The wiring diagram in Figure 52 on page 107 (024257) has two diagrams: one for simultaneous operation of master and satellite and one for non simultaneous operation. Ensure that you use the correct one for your application.

All diagrams in this section show domestic wiring (US and Canada). Breakaway drawings are shown for international applications where wiring is different.

024251 Wiring Diagram Models 9852QTW1

Notes:1) All wiring and conduit runs must conform with all building/fire codes, all Federal, State, and Local codes, National Electrical Code, (NFPA 70), NFPA 30, and Automotive and Marine Service Station Code (NFPA 30A) codes and regulations. Installations in Canada must also comply with the Canadian Electrical Code.

2) The pump motor can be wired as 230 VAC to reduce current draw. See breakaway view of 230 VAC WIRING (see Figure 46 on page 92). All other wiring should remain the same except for the addition of the L2 (requires 230 VAC breaker for control). If connected to an equipment that requires control of the authorization input, the Phase 2 Feed should be switched through a separate relay to prevent false triggering of the authorization signal.

3) To avoid damage to the CPU PC board, all unused wires must be individually capped, and before applying power, you must verify that the RESET COMPLETE and FAST FLOW wires are not shorted to the conduit or chassis.

4) COMPLETE (switch detect) line can supply 170 mA AC maximum for connecting to FMS circuitry.

5) FAST FLOW line can supply 170 mA AC maximum for remote control or monitoring of the fast flow valve found in the pump.

6) If the CONTROL/PUMP MOTOR FEED line is controlled by an FMS that uses solid state relays, a resistor assembly must be installed between the Control Feed line and Feed Neutral to prevent false triggering of the authorization input. The resistor assembly is 8.2K OHM, 10 Watt (P/N C05818) for 115/230 VAC domestic and 30K OHM, 10 Watt (P/N C06683) for 230 VAC international wiring.

7) When used with an aboveground tank, the anti-siphon valve mounted on the tank must be driven from the EXTERNAL VALVE line, have the same operating voltage as the pump motor, and the current draw must not exceed 1 Amp. If these conditions are not met, it must be controlled by an external relay driven from the EXTERNAL VALVE line. DO NOT connect the anti-siphon valve or external relay to the RESET COMPLETE line. DO NOT connect two or more EXTERNAL VALVE lines together. If more than one pump is drawing from the tank, separate anti-siphon valves must be installed, or each EXTERNAL VALVE line must operate an external relay which then operates the valve.

8) Refer to the wire size chart in the section *"Wire Size" on page 56* *to determine the wire size for the control wiring.*

9) If this unit is equipped for 230 VAC operation (international), wire as shown in the standard 115 VAC wiring layout diagram.

10) If this unit is equipped with a TopKAT option, there will be 10 wires in the junction box. Refer to MDE-4319 TopKAT Installation Manual for wiring requirements and information.

Figure 46: 024251 Wiring Diagram Models 9852QTW1

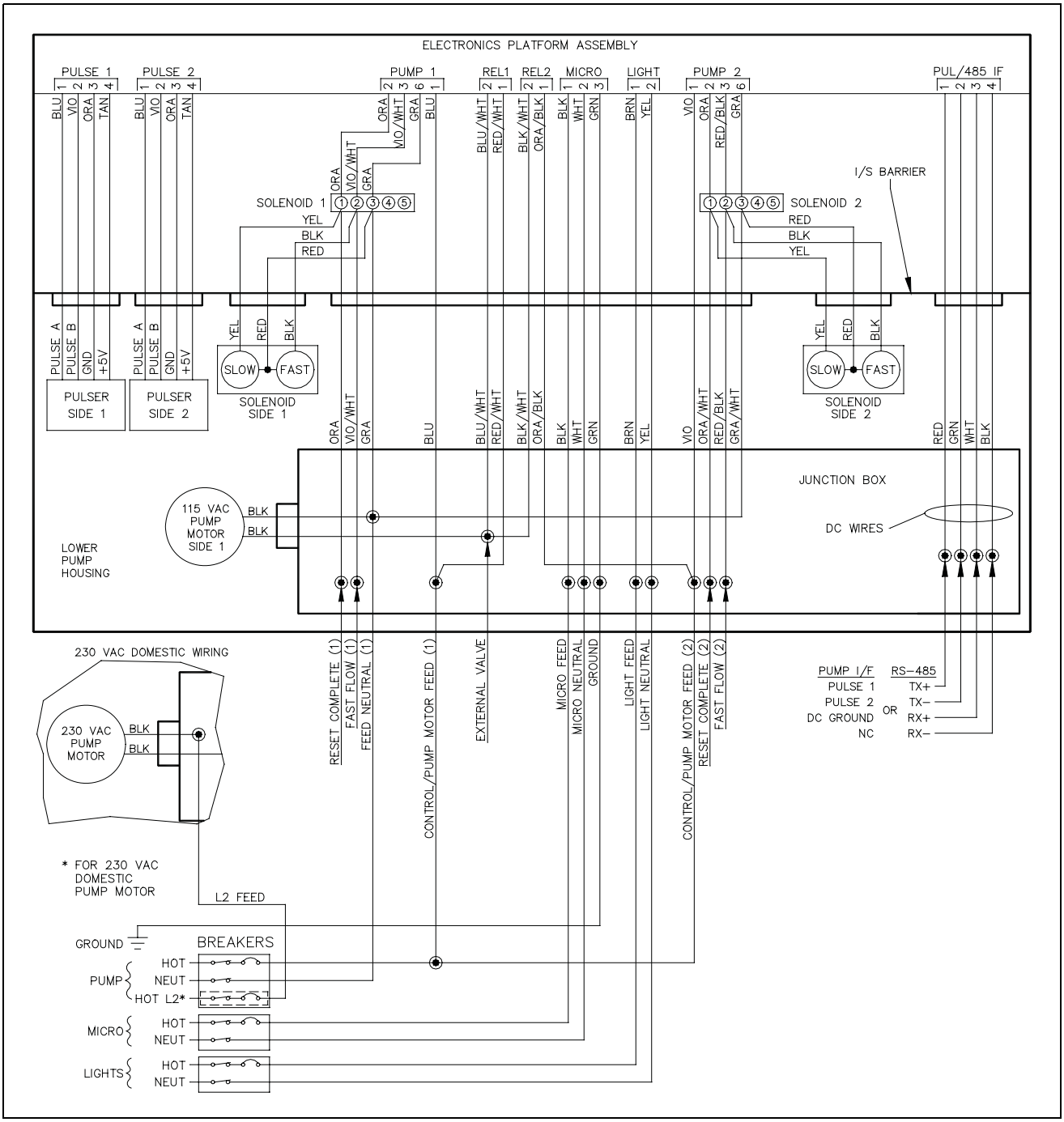

024252 Wiring Diagram Models 9852Q, 9853Q

Notes:1) All wiring and conduit runs must conform with all building/fire codes, all Federal, State, and Local codes, National Electrical Code, (NFPA 70), NFPA 30, and Automotive and Marine Service Station Code (NFPA 30A) codes and regulations. Installations in Canada must also comply with the Canadian Electrical Code.

2) The pump motor can be wired as 230 VAC to reduce current draw. See the breakaway view of 230 VAC WIRING (see Figure 47 on page 94). All other wiring should remain the same except for the addition of the L2 (requires 230 VAC breaker for control). If connected to equipment requiring control of the authorization input, the Phase 2 Feed should be switched through a separate relay to prevent false triggering of the authorization signal.

3) To avoid damage to the CPU PC board, all unused wires must be individually capped, and before applying power, you must verify that the RESET COMPLETE and FAST FLOW wires are not shorted to the conduit or chassis.

4) RESET COMPLETE (switch detect) line can supply 170 mA AC maximum for connecting to FMS circuitry.

5) FAST FLOW line can supply 170 mA AC maximum for remote control or monitoring of the fast flow valve found in the pump.

6) If the CONTROL/PUMP MOTOR FEED line is controlled by a FMS that uses solid state relays, a resistor assembly must be installed between the Control Feed line and Feed Neutral to prevent false triggering of the authorization input. The resistor assembly is 8.2K OHM, 10 Watt (P/N C05818) for 115/230 VAC domestic and 30K OHM, 10 Watt (P/N C06683) for 230 VAC international wiring.

7) When used with an aboveground tank, the anti-siphon valve mounted on the tank must be driven from the EXTERNAL VALVE line, have the same operating voltage as the pump motor, and the current draw must not exceed 1 Amp. If these conditions are not met, it must be controlled by an external relay driven from the EXTERNAL VALVE line. DO NOT connect the anti-siphon valve or external relay to the RESET COMPLETE line. DO NOT connect two or more EXTERNAL VALVE lines together. If more than one pump is drawing from the tank, separate anti-siphon valves must be installed, or each EXTERNAL VALVE line must operate an external relay which then operates the valve.

8) Refer to the wire size chart in the section "Wire Size" on page 56 to determine the wire size for the control wiring.

9) If this unit is equipped for 230 VAC operation (international), wire as shown in the standard 115 VAC wiring layout diagram.

10) If this unit is equipped with a TopKAT option, there will be 10 wires in the junction box. Refer to MDE-4319 TopKAT Installation Manual for wiring requirements and information.

Figure 47: 024252 Wiring Diagram Models 9852Q, 9853Q

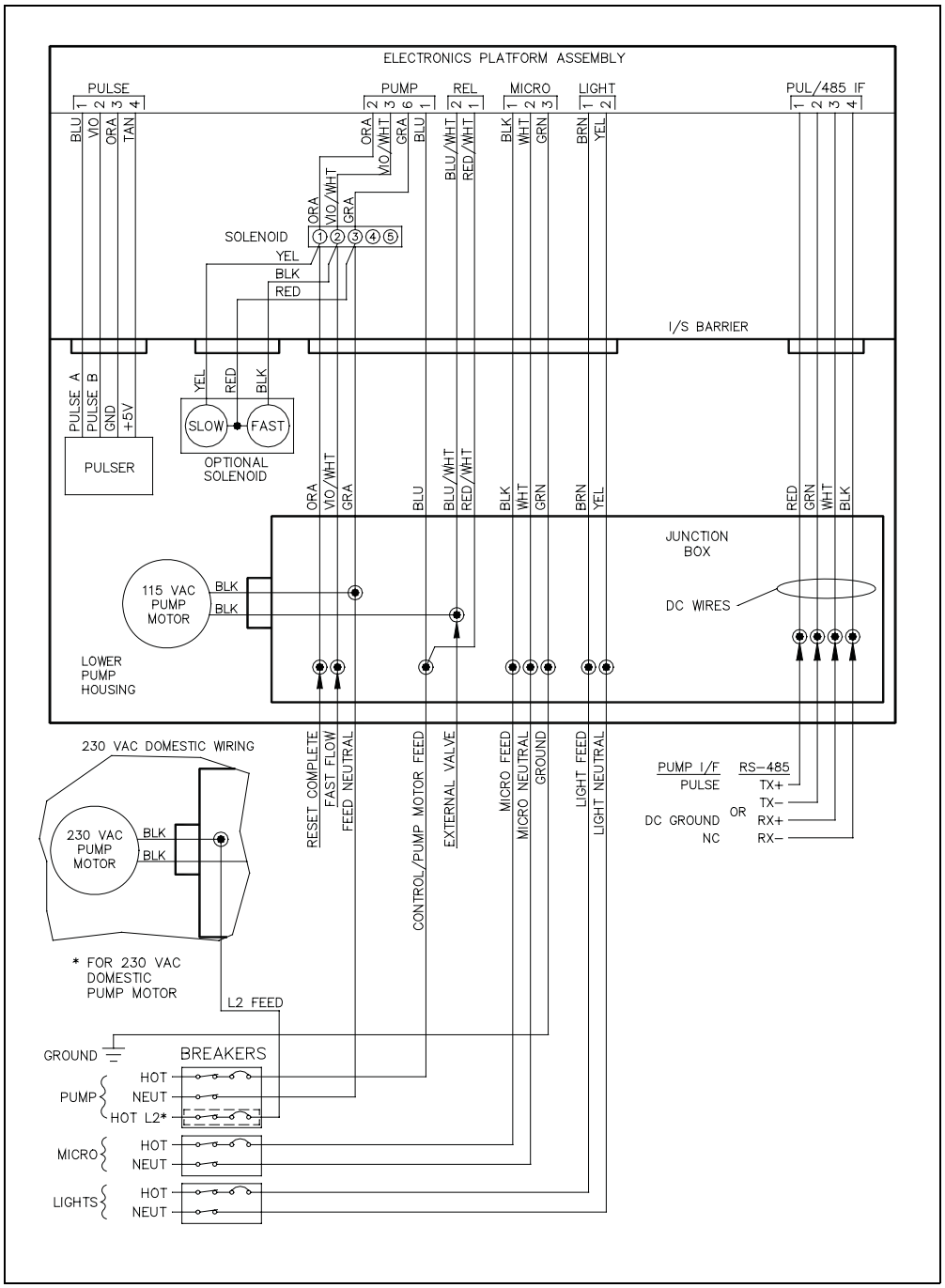

024253 Wiring Diagram Model 9840Q

Notes:1) All wiring and conduit runs must conform with all building/fire codes, all Federal, State, and Local codes, National Electrical Code, (NFPA 70), NFPA 30, and Automotive and Marine Service Station Code (NFPA 30A) codes and regulations. Installations in Canada must also comply with the Canadian Electrical Code.

2) The pump motor must be wired as 230 VAC to reduce current draw (requires 230 VAC breaker for control). If connected to equipment requiring control of the authorization input, the Phase 2 Feed should be switched through a separate relay to prevent false triggering of the authorization signal.

3) To avoid damage to the CPU PC board, all unused wires must be individually capped, and before applying power, you must verify that the RESET COMPLETE and FAST FLOW wires are not shorted to conduit or chassis.

4) RESET COMPLETE (switch detect) line can supply 170 mA AC maximum for connecting to FMS circuitry.

5) FAST FLOW line can supply 170 mA AC maximum for remote control or monitoring of the fast flow valve found in the pump.

6) If the CONTROL/PUMP MOTOR FEED line is controlled by a FMS using solid state relays, a resistor assembly must be installed between the Control Feed line and Feed Neutral to prevent false triggering of the authorization input. The resistor assembly is 8.2K OHM, 10 Watt (P/N C05818) for 115/230 VAC domestic and 30K OHM, 10 Watt (P/N C06683) for 230 VAC international wiring.

7) If this unit is equipped for 230 VAC operation (international) wire as shown in the standard 115 VAC wiring diagram. In this case, the white (WHT) motor wires should be connected to the 230 VAC return wire (Feed Neutral). See breakaway version for international wiring (see Figure 48 on page 96).

8) Refer to the wire size chart in the section "Wire Size" on page 56 to determine the wire size for the control wiring.

9) Model 9840Q should not be used with aboveground tanks.

10) If this unit is equipped with a TopKAT option, there will be 10 wires in the junction box. Refer to MDE-4319 TopKAT Installation Manual for wiring requirements and information.

Figure 48: 024253 Wiring Diagram Model 9840Q

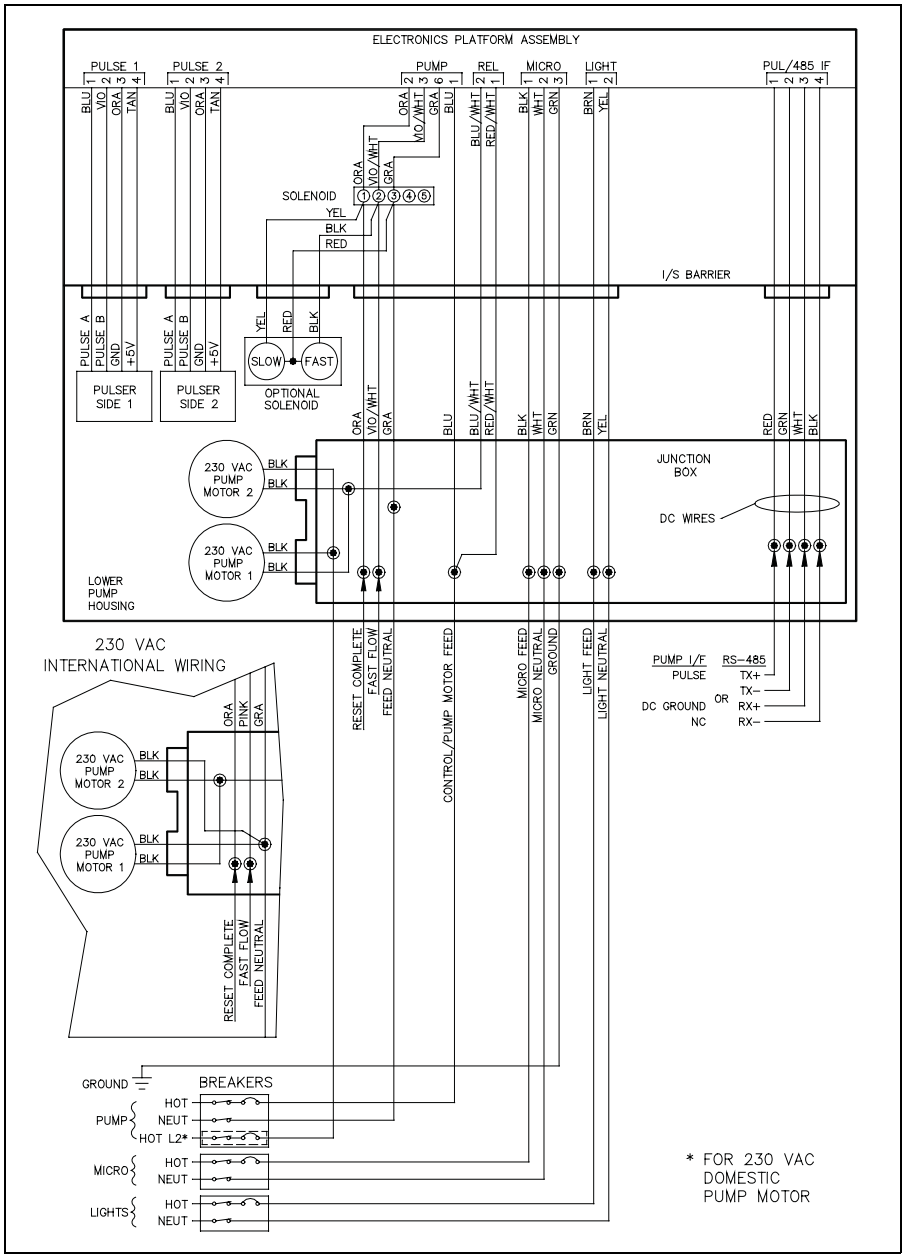

024254 Wiring Diagram Models 9852QX, 9853QX, 9840QX

Notes:1) All wiring and conduit runs must conform with all building/fire codes, all Federal, State, and Local codes, National Electrical Code, (NFPA 70), NFPA 30, and Automotive and Marine Service Station Code (NFPA 30A) codes and regulations. Installations in Canada must also comply with the Canadian Electrical Code.

2) The input line CONTROL/SUBM FEED is comprised of two wires that are tied together at the factory.

3) To avoid damage to the CPU PC board, all unused wires must be individually capped, and before applying power, you must verify that the RESET COMPLETE, FAST FLOW, SUBM. STARTER DRIVE, SLOW and FAST SATELLITE RETURN wires are not shorted to the conduit or chassis.

4) SUBM. STARTER DRIVE line can supply 300 mA AC maximum to control submersible starter relays. This line must not be directly connected to a submersible pump.

5) External submersible relays are required unless the remote dispenser is equipped with the submersible drive relay option. The submersible drive relay option provides a SUBM PUMP DRIVE line (Blue 14) which can directly drive a submersible pump up to 3/4 HP at 115 VAC or 1-1/2 HP at 230 VAC. The 14 AWG SUBM FEED and SUBM PUMP DRIVE wires are always present. Ensure that the submersible drive relay option is installed prior to wiring. The power supplied to the CONTROL/ SUBM FEED must be able to handle the load of the submersible pump.

6) RESET COMPLETE (switch detect) line can supply 170 mA AC maximum for connecting to FMS circuitry and in applications where control of a remote slow flow valve (satellite) is required.

7) FAST FLOW line can supply 170 mA AC maximum and is provided to allow for control of a satellite along with remote control or monitoring of the fast flow valve found in the pump.

8) FAST SAT. RETURN and SLOW SAT. RETURN lines are used when the remote dispenser is supplied with satellite piping and connected to the satellite in a manner to prevent both the remote dispenser and satellite from dispensing product simultaneously. See the satellite wiring diagrams found in this section for correct connection of these lines. These lines are not connected as they leave the factory.

9) If the CONTROL/SUBM FEED line is controlled by an FMS that uses solid state relays, a resistor assembly must be installed between the Control Feed line and Feed Neutral to prevent false triggering of the authorization input. The resistor assembly is 8.2K OHM, 10 Watt (P/N C05818) for 115/230 VAC domestic and 30K OHM, 10 Watt (P/N C06683) for 230 VAC international wiring.

10) When used with an aboveground tank, the valve mounted at the tank MUST NOT be connected to the RESET COMPLETE or SUBM STARTER DRIVE lines. If the optional internal relay kit is installed AND the valve's current draw does not exceed 1 Amp, the valve can be connected to the SUBM PUMP DRIVE line. Else, it should be driven from the external submersible starter relay. In all cases, the tank valve must operate at the same voltage as the submersible pump.

11) If this unit is equipped for 230 VAC operation (international), wire as shown in the standard 115 VAC wiring layout diagram.

12) Second meter and pulser are available only in 9840Q models.

13) Refer to the wire size chart in the section *"Wire Size" on page 56* *to determine the wire size for the control wiring.*

14) If this unit is equipped with a TopKAT option, there will be 10 wires in the junction box. Refer to MDE-4319 TopKAT Installation Manual for wiring requirements and information.

15) When multiple dispensers are used to control a common submersible starter relay or pump, and the 9800 is controlled (authorized) through the Control/SubM Feed line (as in the case of some FMS), it is important that the lines from the 9800 to the submersible equipment be isolated from each other. This can be accomplished by running the submersible control lines through a secondary set of relay contacts in the FMS. If a secondary set of contacts is not available, external control relays must be used between the 9800 and the submersible starter relay or pump. Another option is to provide a separate submersible starter relay for each hose outlet. The submersible drive lines from the 9800 cannot be tied together, in any circumstance.

Figure 49: 024254 Wiring Diagram Models 9852QX, 9853QX, 9840QX

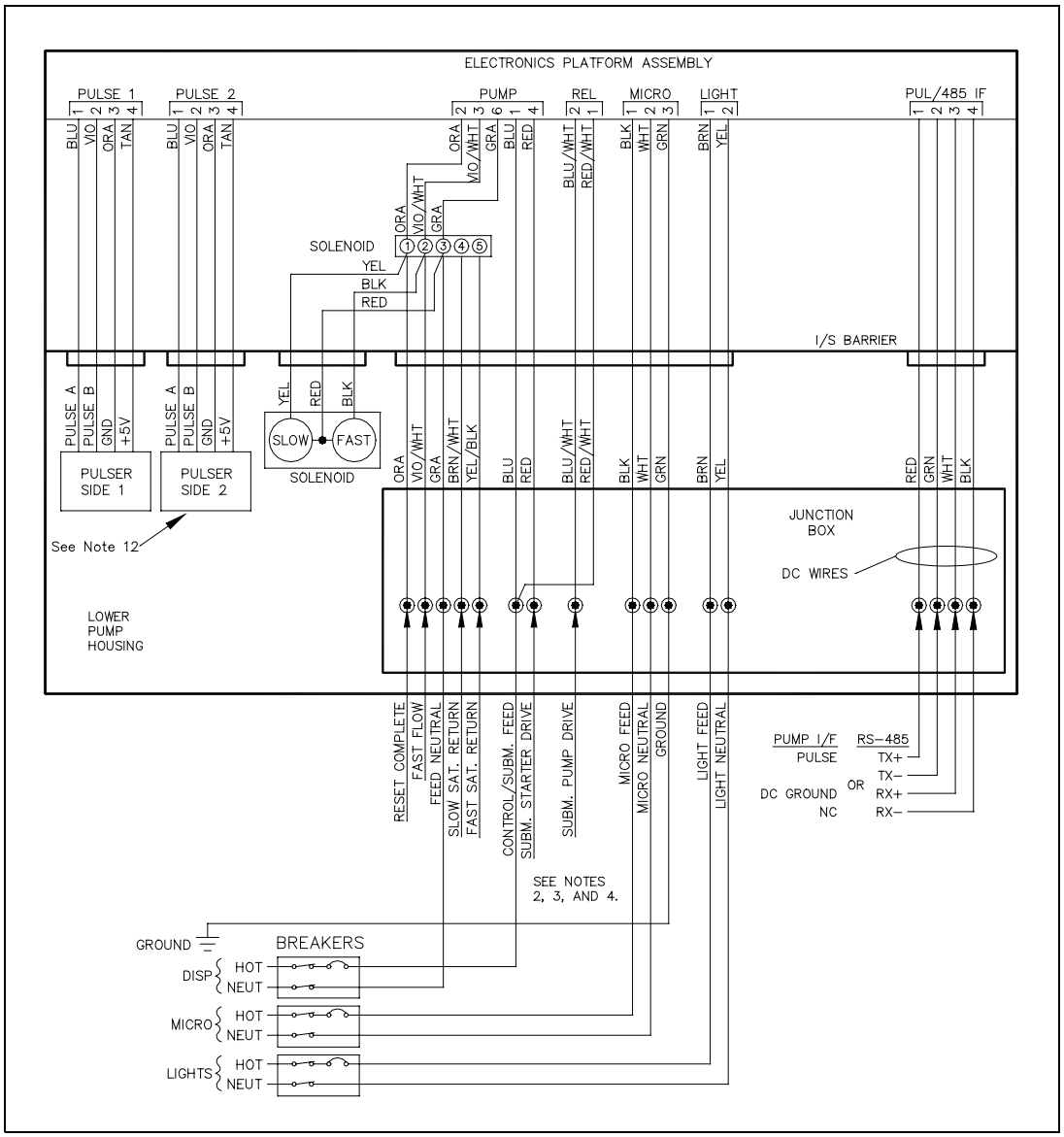

024255 Wiring Diagram Models 9852QXTW1, 9852QXTW2, 9853QXTW1, 9853QXTW2

Notes:1) All wiring and conduit runs must conform with all building/fire codes, all Federal, State, and Local codes, National Electrical Code, (NFPA 70), NFPA 30, and Automotive and Marine Service Station Code (NFPA 30A) codes and regulations. Installations in Canada must also comply with the Canadian Electrical Code.

2) The input line CONTROL/SUBM FEED is comprised of two wires which are tied together at the factory.

CAUTION

To avoid damage to the CPU PC board, all unused wires must be individually capped, and before applying power, you must verify that the RESET COMPLETE, FAST FLOW, SUBM. STARTER DRIVE, SLOW and FAST SATELLITE RETURN wires are not shorted to conduit or chassis.

3) SUBM. STARTER DRIVE line can supply 300 mA AC maximum to control submersible starter relays.

CAUTION

This line must not be directly connected to a pump.

4) External submersible relays are required unless the remote dispenser is equipped with the submersible drive relay option. The submersible drive relay option provides a SUBM PUMP DRIVE line (Blue 14) which can directly drive a submersible pump up to 3/4 HP at 115 VAC or 1-1/2 HP at 230 VAC. The 14 AWG SUBM FEED and SUBM PUMP DRIVE wires are always present. Ensure that the submersible drive relay option is installed prior to wiring. The power supplied to the CONTROL/ SUBM FEED must be able to handle the load of the submersible pump.

5) RESET COMPLETE (switch detect) line can supply 170 mA AC maximum for connecting to FMS circuitry and in applications where control of a remote slow flow valve (satellite) is required.

6) FAST FLOW line can supply 170 mA AC maximum is provided to allow for control of a satellite along with remote control or monitoring of the fast flow valve found in the pump.

7) FAST SAT. RETURN and SLOW SAT. RETURN lines are used when the remote dispenser is supplied with satellite piping and connected to the satellite in a manner to prevent both the remote dispenser and satellite from dispensing product simultaneously. See the satellite wiring diagrams found in this section for correct connection of these lines. These lines are not connected when they leave the factory.

8) If the CONTROL/PUMP MOTOR FEED line is controlled by a FMS using solid state relays, a resistor assembly must be installed between the Control Feed line and Feed Neutral to prevent false triggering of the authorization input. The resistor assembly is 8.2K OHM, 10 Watt (P/N C05818) for 115/230 VAC domestic and 30K OHM, 10 Watt (P/N C06683) for 230 VAC international wiring.

9) Refer to the wire size chart in the section *"Wire Size" on page 56* *to determine the wire size for the control wiring.*

10) When used with an aboveground tank, the valve mounted at the tank MUST NOT be connected to the RESET COMPLETE or SUBM STARTER DRIVE lines. If the optional internal relay kit is installed AND the valve's current draw does not exceed 1 Amp, the valve can be connected to the SUBM PUMP DRIVE line. Else, it should be driven from the external submersible starter relay. In all cases, the tank valve must operate at the same voltage as the submersible pump.

11) If this unit is equipped for 230 VAC operation (international), wire as shown in the standard 115 VAC wiring layout diagram.

12) If this unit is equipped with a TopKAT option, there will be 10 wires in the junction box. Refer to MDE-4319 TopKAT Installation Manual for wiring requirements and information.

13) When multiple dispensers are used to control a common submersible starter relay or pump, and the 9800 is controlled (authorized) through the "Control/SubM Feed" line (as in the case of some FMS), it is important that the lines from the 9800 to the submersible equipment be isolated from each other. This can be accomplished by running the submersible control lines through a secondary set of relay contacts in the FMS. If a secondary set of contacts is not available, external control relays must be used between the 9800 and the submersible starter relay or pump. Another option is to provide a separate submersible starter relay for each hose outlet. The submersible drive lines from the 9800 cannot be tied together, in any circumstance.

Figure 50: 024255 Wiring Diagram Models 9852QXTW1, 9852QXTW2, 9853QXTW1, 9853QXTW2

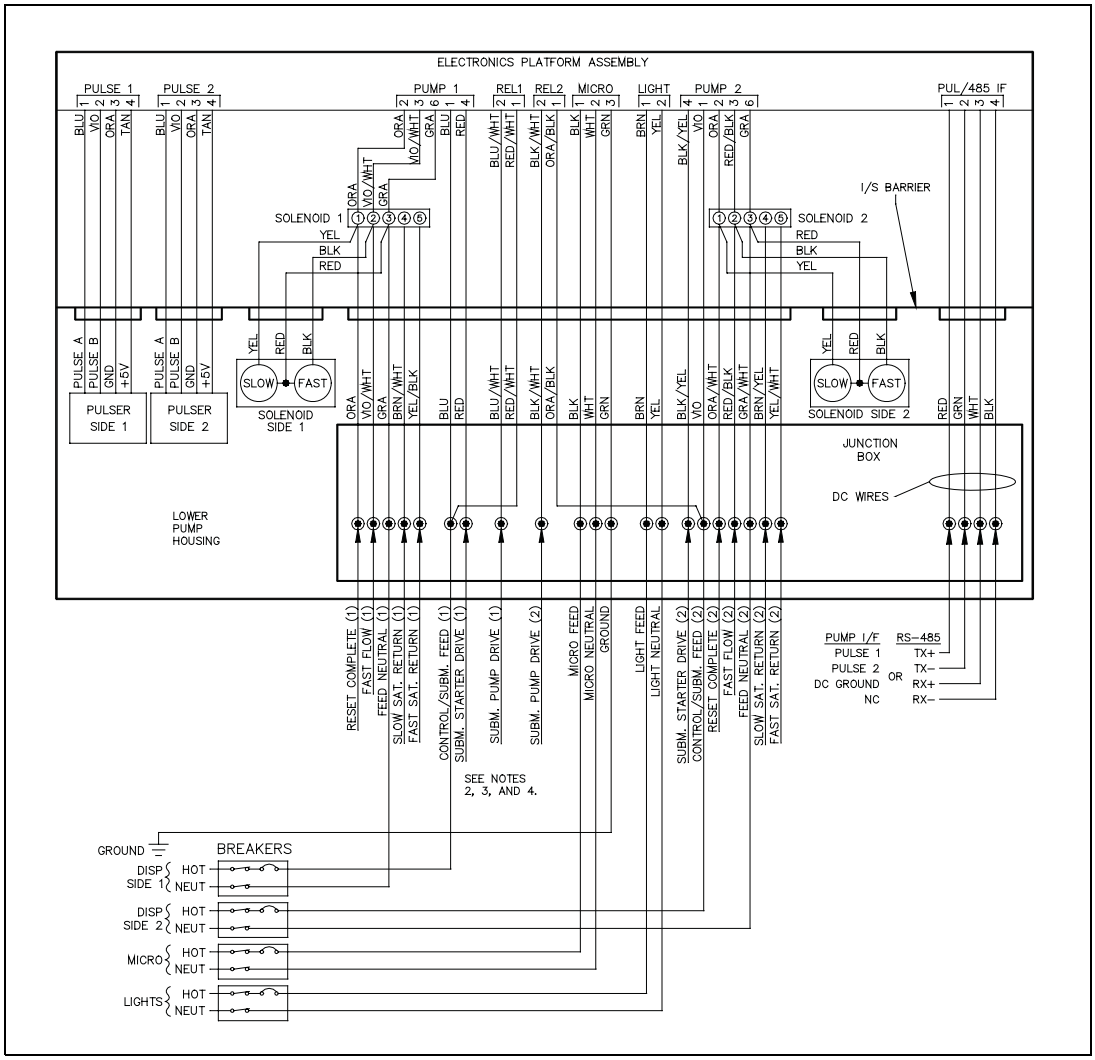

024256 Wiring Diagram Models 9852QTW2, 9853QTW2, 9853QTW1M

Notes:1) All wiring and conduit runs must conform with all building/fire codes, all Federal, State, and Local codes, National Electrical Code, (NFPA 70), NFPA 30, and Automotive and Marine Service Station Code (NFPA 30A) codes and regulations. Installations in Canada must also comply with the Canadian Electrical Code.

2) Pump motor can be wired as 230 VAC to reduce current draw. See breakaway view of 230 VAC WIRING (see Figure 51 on page 104). All other wiring should remain the same except for the addition of the L2 (requires 230 VAC breaker for control). If connected to equipment requiring control of the authorization input, the Phase 2 Feed should be switched through a separate relay to prevent false triggering of the authorization signal.

CAUTION

To avoid damage to the CPU PC board, all unused wires must be individually capped, and before applying power, you must verify that the RESET COMPLETE and FAST FLOW wires are not shorted to conduit or chassis.

3) RESET COMPLETE (switch detect) line can supply 170 mA AC maximum for connecting to FMS circuitry.

4) FAST FLOW line can supply 170 mA AC maximum for remote control or monitoring of the fast flow valve found in the pump.

5) If the CONTROL/PUMP MOTOR FEED line is controlled by a FMS using solid state relays, a resistor assembly must be installed between the Control Feed line and Feed Neutral to prevent false triggering of the authorization input. The resistor assembly is 8.2K OHM, 10 Watt (P/N C05818) for 115/230 VAC domestic and 30K OHM, 10 Watt (P/N C06683) for 230 VAC international wiring.

6) When used with an aboveground tank, the anti-siphon valve mounted on the tank must be driven from the EXTERNAL VALVE line, have the same operating voltage as the pump motor, and the current draw must not exceed 1 Amp. If these conditions are not met, it must be controlled by an external relay driven from the EXTERNAL VALVE line. DO NOT connect the anti-siphon valve or external relay to the RESET COMPLETE line. DO NOT connect two or more EXTERNAL VALVE lines together. If more than one pump is drawing from the tank, separate anti-siphon valves must be installed, or each EXTERNAL VALVE line must operate an external relay which then operates the valve.

7) Refer to the wire size chart in the section "Wire Size" on page 56 to determine the wire size for the control wiring.

8) If this unit is equipped for 230 VAC operation (international), wire as shown in the standard 115 VAC wiring layout diagram.If this unit is equipped with a TopKAT option, there will be 10 wires in the junction box. Refer to MDE-4319 TopKAT Installation Manual for wiring requirements and information.

9) Model 9853QTW1M should not be used with aboveground tanks.

Figure 51: 024256 Wiring Diagram Models 9852QTW2, 9853QTW2, 9853QTW1M

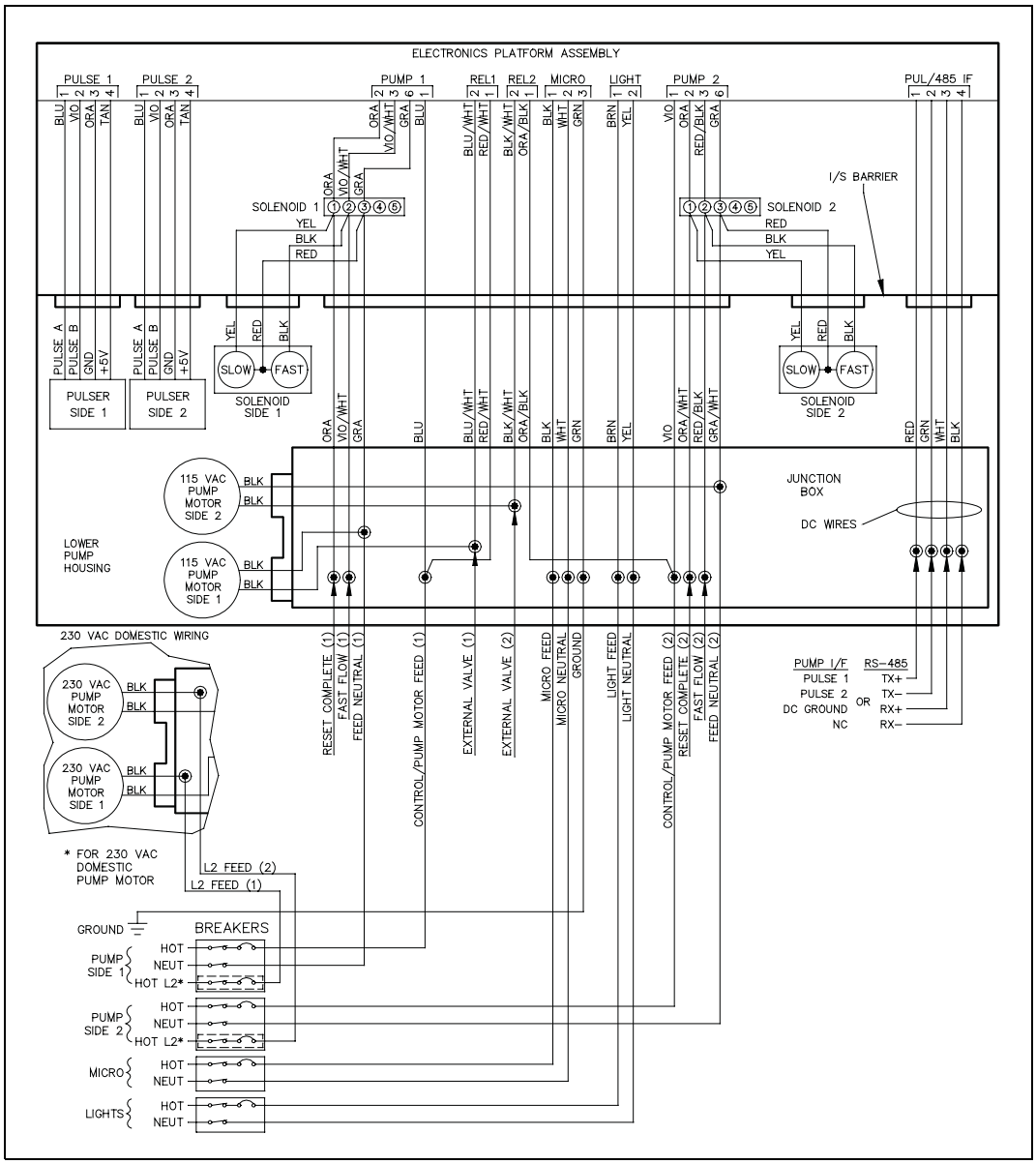

024257 Wiring Diagram Models Satellite 215Q/Satellite 216Q

Notes:1) All wiring and conduit runs must conform with all building/fire codes, all Federal, State, and Local codes, National Electrical Code, (NFPA 70), NFPA 30, and Automotive and Marine Service Station Code (NFPA 30A) codes and regulations. Installations in Canada must also comply with the Canadian Electrical Code.

2) See Weights and Measures Handbook 44 to determine which mode of satellite operation is relevant for your application. In many cases, the satellite must be wired so it cannot dispense product while the master remote dispenser is dispensing and vice versa. Use the correct wiring diagram for your application.

3) The input line CONTROL/SUBM FEED is comprised of two wires which are tied together at the factory.

CAUTION

To avoid damage to the CPU PC board, all unused wires must be individually capped, and before applying power, you must verify that the RESET COMPLETE, FAST FLOW, SUBM. STARTER DRIVE, SLOW and FAST SATELLITE RETURN wires are not shorted to conduit or chassis.

4) SUBM. STARTER DRIVE line can supply 300 mA AC maximum to control submersible starter relays.

CAUTION

This line must not be directly connected to a submersible pump.

5) External submersible relays are required unless the remote dispenser is equipped with the submersible drive relay option. The submersible drive relay option provides a SUBM PUMP DRIVE line (Blue 14) which can directly drive a submersible pump up to 3/4 HP at 115 VAC or 1-1/2 HP at 230 VAC. The 14 AWG SUBM FEED and SUBM PUMP DRIVE wires are always present. Ensure that the submersible drive relay option is installed prior to wiring. The power supplied to the CONTROL/ SUBM FEED must be able to handle the load of the submersible pump.

6) If the CONTROL/SUBM FEED line is controlled by an FMS that uses solid state relays, a resistor assembly must be installed between the Control Feed line and Feed Neutral to prevent false triggering of the authorization input. The resistor assembly is 8.2K OHM, 10 Watt (P/N C05818) for 115/230 VAC domestic and 30K OHM, 10 Watt (P/N C06683) for 230 VAC international wiring.

7) The FAST FLOW line (pink wire) is disconnected when it is supplied from the factory. It must be connected, in the upper junction box, to the pink wire (fast flow control) originating from the electronic platform assembly.

8) If using a 9800Q and satellite in an application where both master and satellite cannot dispense product at the same time, a minor change in the 9800Q wiring must be made. In the solenoid J-Box, disconnect the solenoid yellow wire from the two orange wires (leave the two orange wires connected together). Connect the solenoid yellow wire to the 18 AWG brown wire. In the solenoid junction box, disconnect the solenoid black wire from the two pink wires (leave the two pink wires connected together, as described in note 5). Connect the solenoid black wire to the 18 AWG yellow wire. Wire the remote dispenser to the satellite as shown in the wiring diagram labeled Non-Simultaneous (see Figure 52 on page 107).

9) If this unit is equipped for 230 VAC operation (international), wire as shown in the standard 115 VAC wiring layout diagram.

10) These wiring diagrams are intended only to show the connections between the satellite and the dispenser. See wiring diagram for master dispenser (as per the model number) for applicable warnings and proper connection of all wires.

Figure 52: 024257 Wiring Diagram Models Satellite 215Q/Satellite 216Q

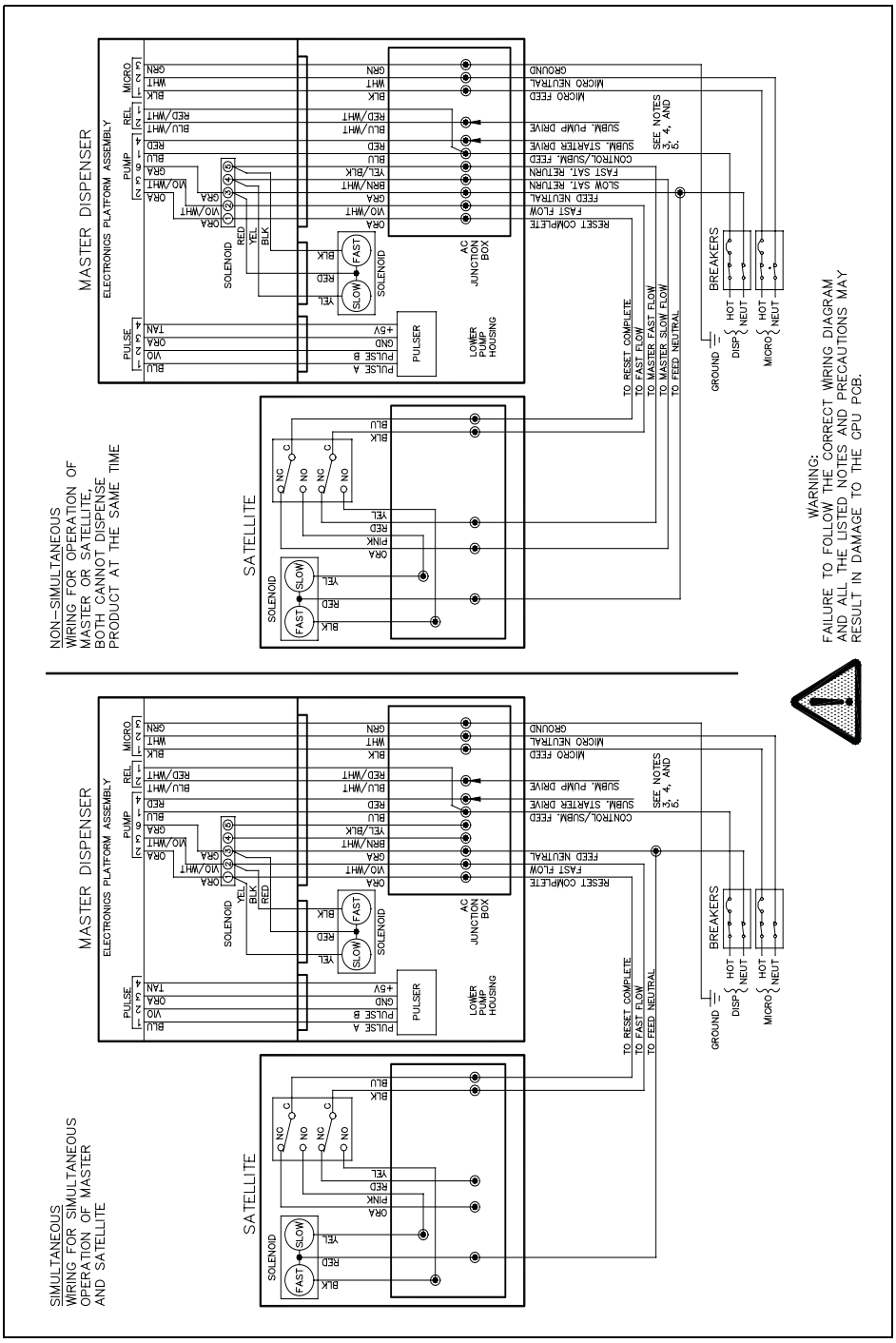

024294 Wiring Diagram Models 9853Q 380VAC

Notes:1) All wiring and conduit runs must conform with all building/fire codes, all Federal, State, and Local codes, National Electrical Code, (NFPA 70), NFPA 30, and Automotive and Marine Service Station Code (NFPA 30A) codes and regulations. Installations in Canada must also comply with the Canadian Electrical Code.

CAUTION

To avoid damage to the CPU PC board, all unused wires must be individually capped, and before applying power, you must verify that the RESET COMPLETE and FAST FLOW wires are not shorted to conduit or chassis.

2) RESET COMPLETE (switch detect) line can supply 170 mA AC maximum for connecting to FMS circuitry.

3) FAST FLOW line can supply 170 mA AC maximum for remote control or monitoring of the fast flow valve found in the pump.

4) If the CONTROL/PUMP MOTOR FEED line is controlled by an FMS that uses solid state relays, a resistor assembly must be installed between the Control Feed line and Feed Neutral to prevent false triggering of the authorization input. The resistor assembly is 10 Watt (P/N C06683).

5) Refer to the wire size chart (230VAC section) in the section *"Wire Size" on page 56* *to determine the wire size for the control wiring.*

6) If this unit is equipped with a TopKAT option, there will be 10 wires in the junction box. Refer to MDE-4319 TopKAT Installation Manual for wiring requirements and information.

7) When used with an aboveground tank, the anti-siphon valve mounted on the tank must be driven from the EXTERNAL VALVE line, have the same operating voltage as the pump motor, and the current draw must not exceed 1 Amp. If these conditions are not met, it must be controlled by an external relay driven from the EXTERNAL VALVE line. DO NOT connect the anti-siphon valve or external relay to the RESET COMPLETE line. DO NOT connect two or more EXTERNAL VALVE lines together. If more than one pump is drawing from the tank, separate anti-siphon valves must be installed, or each EXTERNAL VALVE line must operate an external relay which then operates the valve.

Figure 53: 024294 Wiring Diagram Models 9853Q 380VAC

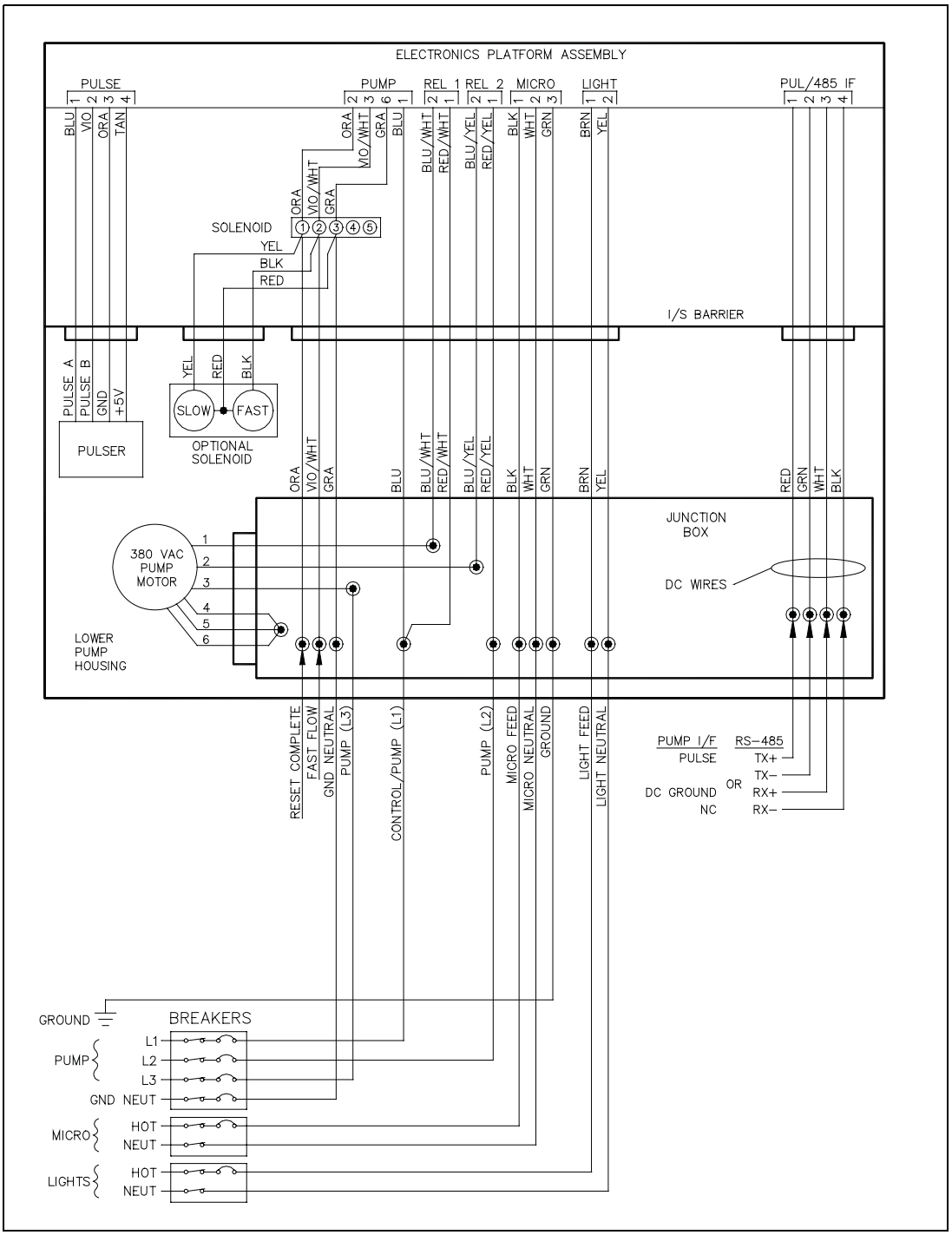

024295 Wiring Diagram Model 9840Q 380 VAC

Notes:1) All wiring and conduit runs must conform with all building/fire codes, all Federal, State, and Local codes, National Electrical Code, (NFPA 70), NFPA 30, and Automotive and Marine Service Station Code (NFPA 30A) codes and regulations. Installations in Canada must also comply with the Canadian Electrical Code.

CAUTION

To avoid damage to the CPU PC board, all unused wires must be individually capped, and before applying power, you must verify that the RESET COMPLETE and FAST FLOW wires are not shorted to conduit or chassis.

2) RESET COMPLETE (switch detect) line can supply 170 mA AC maximum for connecting to FMS circuitry.

3) FAST FLOW line can supply 170 mA AC maximum for remote control or monitoring of the fast flow valve found in the pump.

4) If the CONTROL/PUMP MOTOR FEED line is controlled by an FMS that uses solid state relays, a resistor assembly must be installed between the Control Feed line and Feed Neutral to prevent false triggering of the authorization input. The resistor assembly is 30K OHM, 10 Watt (P/N C06683).

5) Second meter and pulser available only on 9840Q models.

6) Refer to the wire size chart (230VAC section) in the section *"Wire Size" on page 56* *to determine the wire size for the control wiring.*

7) Model 9840Q should not be used with aboveground tanks.

8) If this unit is equipped with a TopKAT option, there will be 10 wires in the junction box. Refer to MDE-4319 TopKAT Installation Manual for wiring requirements and information.

Figure 54: 024295 Wiring Diagram Model 9840Q 380 VAC

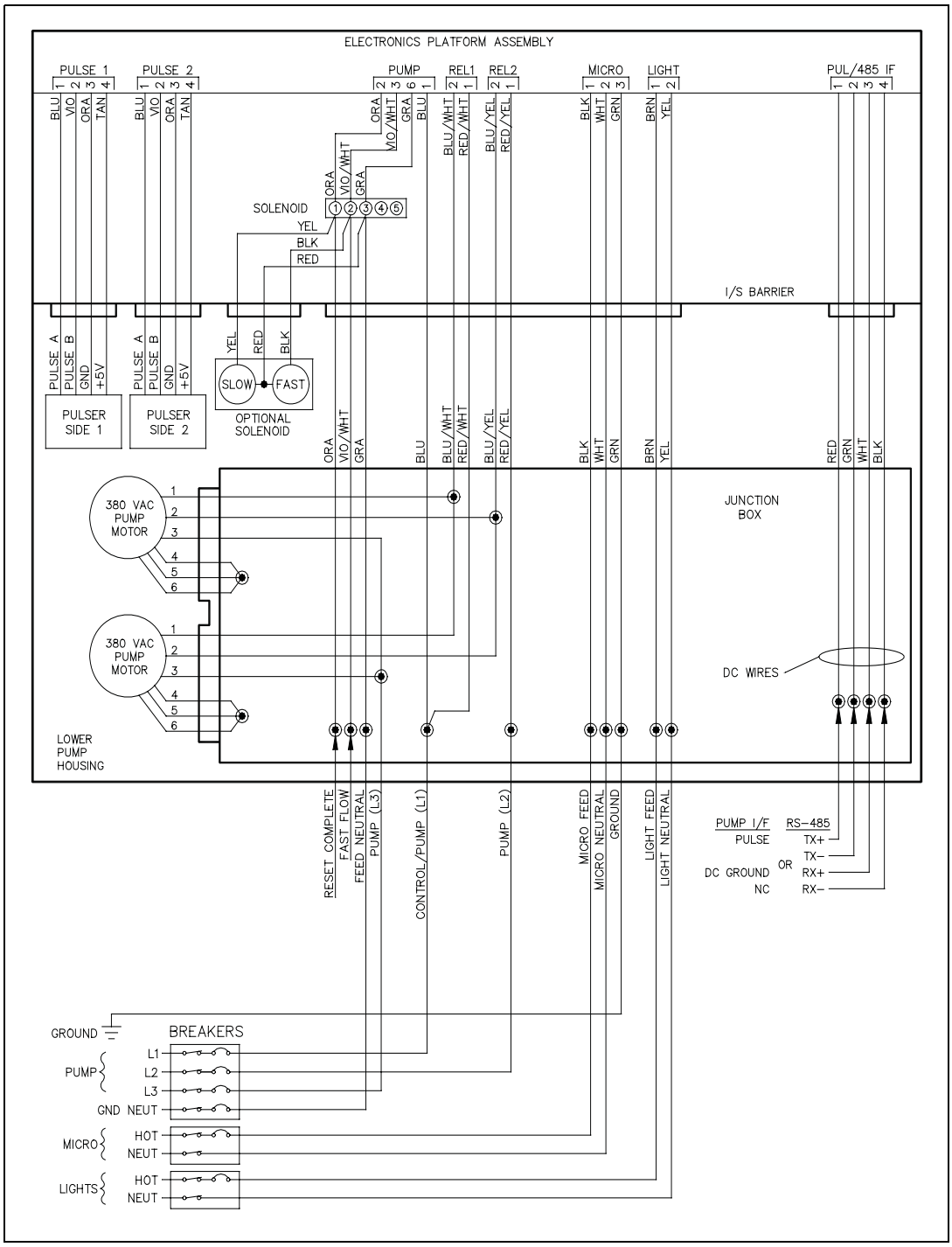

024297 Wiring Diagram Models 9853QTW2 380 VAC and 9853QTW1M 380 VAC

Notes:1) All wiring and conduit runs must conform with all building/fire codes, all Federal, State, and Local codes, National Electrical Code, (NFPA 70), NFPA 30, and Automotive and Marine Service Station Code (NFPA 30A) codes and regulations. Installations in Canada must also comply with the Canadian Electrical Code.

CAUTION

To avoid damage to the CPU PC board, all unused wires must be individually capped, and before applying power, you must verify that the RESET COMPLETE and FAST FLOW wires are not shorted to conduit or chassis.

2) RESET COMPLETE (switch detect) line can supply 170 mA AC maximum for connecting to FMS circuitry.

3) FAST FLOW line can supply 170 mA AC maximum for remote control or monitoring of the fast flow valve found in the pump.

4) If the CONTROL/PUMP MOTOR FEED line is controlled by an FMS that uses solid state relays, a resistor assembly must be installed between the Control Feed line and Feed Neutral to prevent false triggering of the authorization input. The resistor assembly is 10 Watt (P/N C06683).

5) Refer to the wire size chart (230VAC section) in the section *"Wire Size" on page 56* *to determine the wire size for the control wiring.*

6) If this unit is equipped with a TopKAT option, there will be 10 wires in the junction box. Refer to MDE-4319 TopKAT Installation Manual for wiring requirements and information.

7) Model 9853QTW1M should not be used with aboveground tanks.

Figure 55: 024297 Wiring Diagram Models 9853QTW2 380 VAC and 9853QTW1M 380 VAC

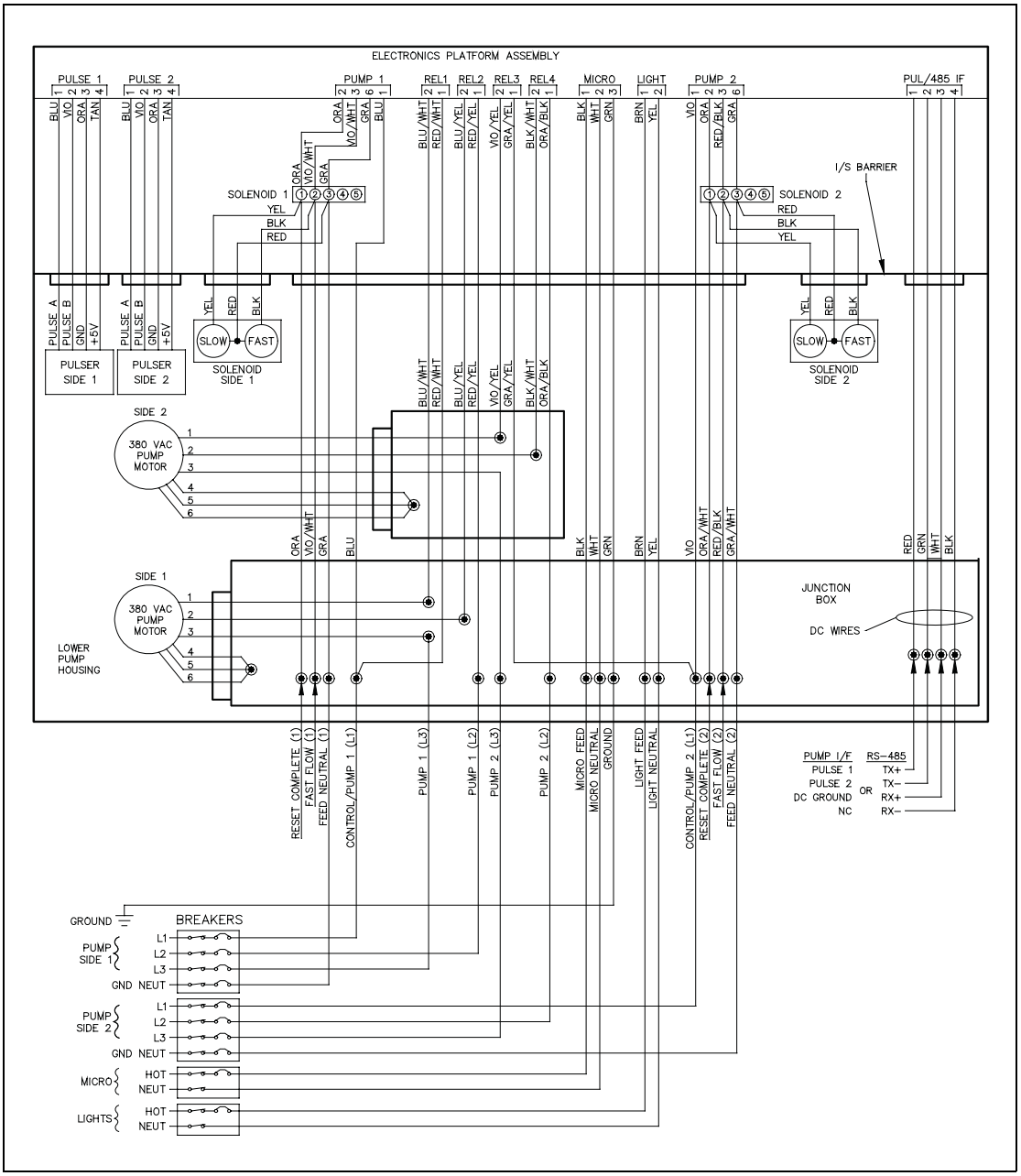

024319 Wiring Diagram Models Satellite 215Q Front Load Satellite 216Q Front Load

Notes:1) All wiring and conduit runs must conform with all building/fire codes, all Federal, State, and Local codes, National Electrical Code, (NFPA 70), NFPA 30, and Automotive and Marine Service Station Code (NFPA 30A) codes and regulations. Installations in Canada must also comply with the Canadian Electrical Code.

2) See Weights and Measures Handbook 44 to determine which mode of satellite operation is relevant for your application. In many cases, the satellite must be wired so it cannot dispense product while the master remote dispenser is dispensing and vice versa. Use the correct wiring diagram for your application.

3) The input line CONTROL/SUBM FEED is comprised of two wires which are tied together at the factory.

CAUTION

To avoid damage to the CPU PC board, all unused wires must be individually capped, and before applying power, you must verify that the RESET COMPLETE, FAST FLOW, SUBM. STARTER DRIVE, SLOW and FAST SATELLITE RETURN wires are not shorted to conduit or chassis.

4) SUBM. STARTER DRIVE line can supply 300 mA AC maximum to control submersible starter relays.

CAUTION

This line must not be directly connected to a submersible pump.

5) External submersible relays are required unless the remote dispenser is equipped with the submersible drive relay option. The submersible drive relay option provides a SUBM PUMP DRIVE line (Blue 14) which can directly drive a submersible pump up to 3/4 HP at 115 VAC or 1-1/2 HP at 230 VAC. The 14 AWG SUBM FEED and SUBM PUMP DRIVE wires are always present. Ensure that the submersible drive relay option is installed prior to wiring. The power supplied to the CONTROL/ SUBM FEED must be able to handle the load of the submersible pump.

6) If the CONTROL/SUBM FEED line is controlled by an FMS that uses solid state relays, a resistor assembly must be installed between the Control Feed line and Feed Neutral to prevent false triggering of the authorization input. The resistor assembly is 8.2K OHM, 10 Watt (P/N C05818) for 115/230 VAC domestic and 30K OHM, 10 Watt (P/N C06683) for 230 VAC international wiring.

7) The FAST FLOW line (pink wire) is disconnected when it is supplied from the factory. It must be connected, in the upper junction box, to the pink wire (fast flow control) coming from the electronic platform assembly.

8) If using a GASBOY 9800Q and satellite in an application where both master and satellite cannot dispense product at the same time, a minor change in the 9800Q wiring must be made. In the solenoid J-Box, disconnect the solenoid yellow wire from the two orange wires (leave the two orange wires connected together). Connect the solenoid yellow wire to the 18 AWG brown wire. In the solenoid junction box, disconnect the solenoid black wire from the two pink wires (leave the two pink wires connected together, as described in note 5). Connect the solenoid black wire to the 18 AWG yellow wire. Wire the remote dispenser to the satellite as shown in the wiring diagram labeled Non-Simultaneous.

9) If this unit is equipped for 230 VAC operation (international), wire as shown in the standard 115 VAC wiring layout diagram.

10) These wiring diagrams are intended only to show the connections between the satellite and the dispenser. See the wiring diagram for master dispenser (as per the model number) for applicable warnings and proper connection of all wires.

Figure 56: 024319 Wiring Diagram Models Satellite 215Q Front Load Satellite 216Q Front Load

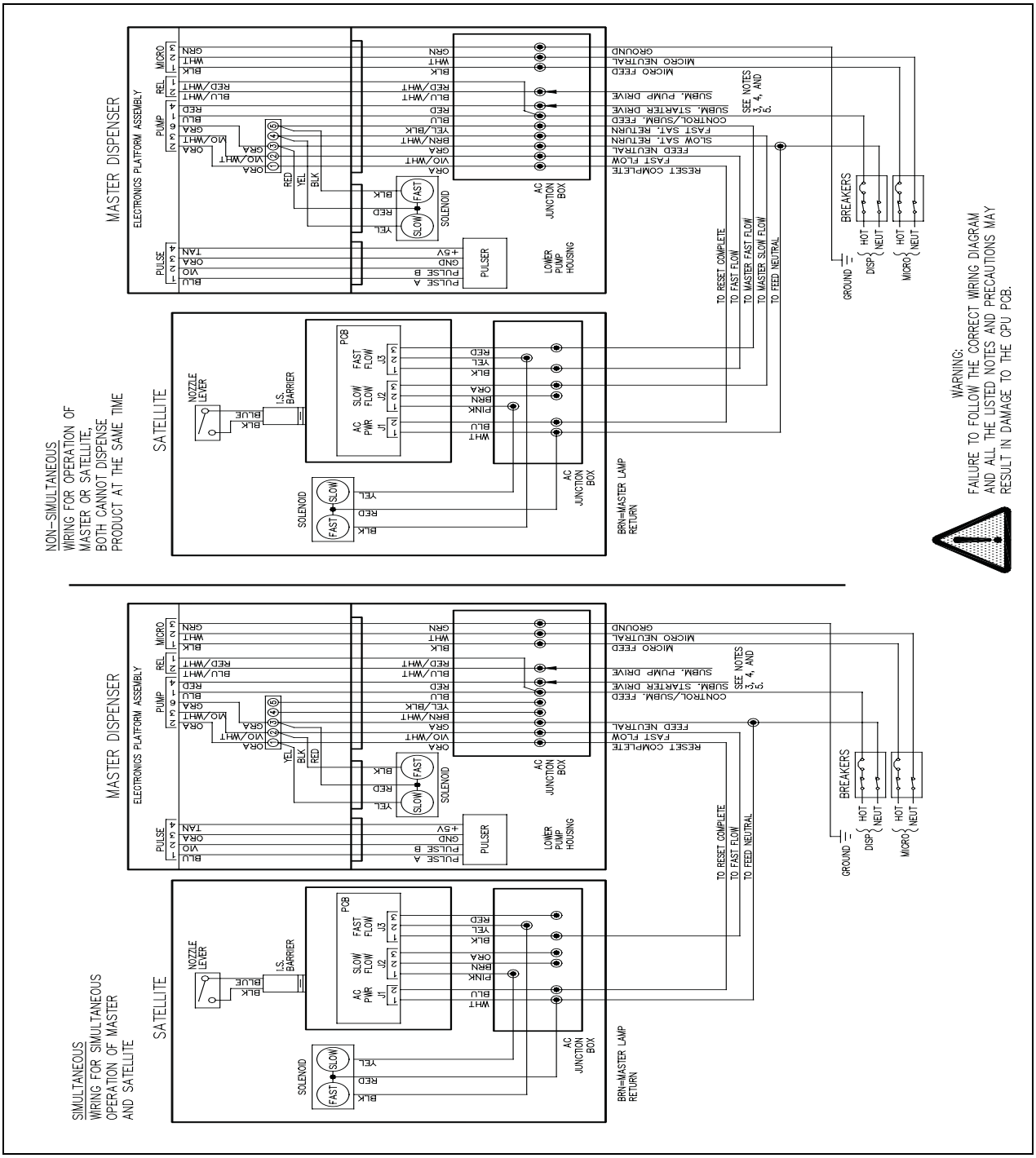

6 – Pump/Remote Dispenser Operation

Overview

This section describes the operation of the pump/remote dispenser. It provides instructions to access the electronic components, and set the internal switches and the optional battery back-up power supply. It also provides instructions to view and reset the electronic totalizers using the actuator, and the operating sequences for both pumps and remote dispensers.

Electronic Component Access

Before attempting to start-up the 9800A or 9800Q, you must become familiar with the location of some key components and the various switch-selectable operating modes.

To access the electronic components, proceed as follows:

1 Unlock and remove the front panel.

Figure 57: Unlocking and Removing the Front Panel

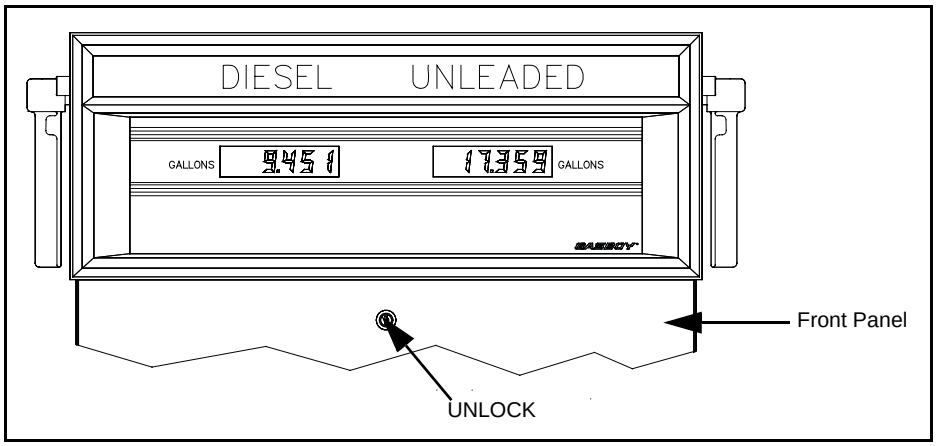

2 Remove the two bolts located over the tabs of the bezel assembly. Lift the bezel assembly upwards and remove it.

Figure 58: Removing the Bolts in the Bezel Assembly

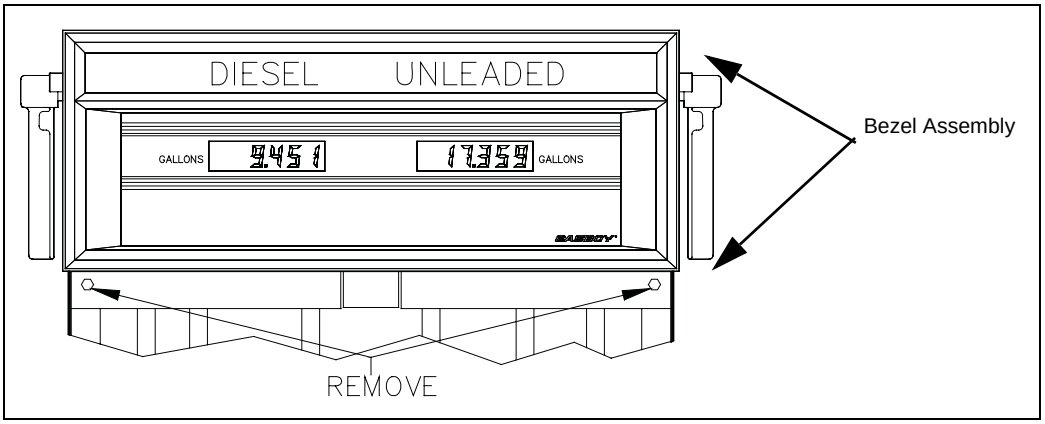

3 Loosen the two screws located on the left and right door support brackets and pivot the display panel down.

Figure 59: Loosening the Two Screws on the Support Brackets and Pivot Display Panel

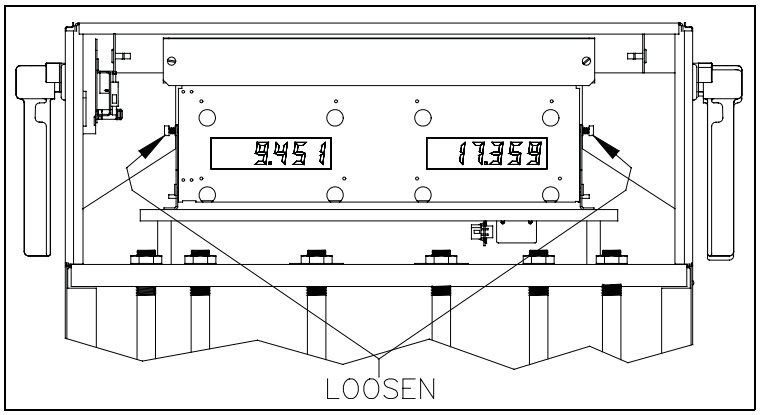

CPU Switch Settings

The 9800A or 9800Q can be configured for various operating conditions using the switches located on the CPU PCB. Check these switches and change their settings if necessary. Switch settings should be changed with the power switch OFF. The new settings are read by the CPU PCB when the power is turned ON again.

Figure 60: Switches Located on the CPU PCB

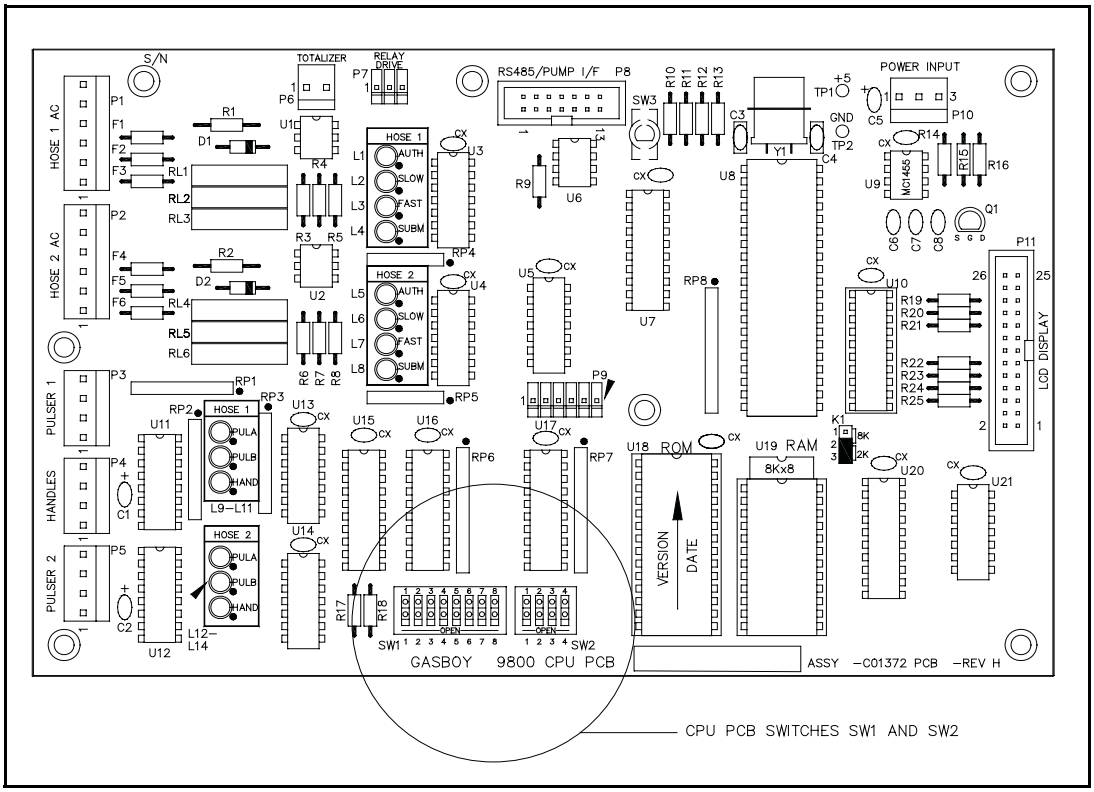

SW1

SW1-1 Baud Rate

This switch is set to reflect the communication rate of the Gasboy RS-485 pump loop. It is open for 9600 baud and closed for 1200 baud. The Gasboy CFN system and TopKAT communicate at 9600 baud.

Baud Rate	SW1-1	Fuel System
9600	Open	CFN TopKAT top-mount TopKAT electronic
1200	Closed	None currently supported

SW1-2 Mode

If the 9800 is controlled by a Gasboy CFN, TopKAT top-mount, or TopKAT electronic FMS, the switch should be open (online mode). If the 9800 is controlled by a Gasboy Series 1000 or TopKAT mechanical system, or controlled by any non-Gasboy system, or not controlled by any FMS at all, the switch should be closed (standalone mode).

Note: The 9800 is shipped in standalone mode unless it has the TopKAT top-mount option. With the TopKAT top-mount option, the unit is shipped in on-line mode.

Mode	SW1-2	Fuel System
On-line	Open	CFN TopKAT top-mount TopKAT electronic
Standalone	Closed	Series 1000 TopKAT Mechanical All non-Gasboy systems No fuel system

SW1-3, SW1-4 Delay Time

These two switches set the delay time used by leak detectors in submersible pump applications. The delay time is the period between activation of the submersible pump and activation of the slow flow valve. This time should be set according to the type of leak detector installed on the submersible pump to allow a normal leak test for each transaction. The delay time should be set to zero seconds for suction pumps.

Delay time	SW1-3	SW1-4
0 seconds	Closed	Closed
4 seconds	Closed	Open
5 seconds	Open	Closed
6 seconds	Open	Open

SW1-5 Pressurization

If the Series 9800 program is configured for US Gallons, this DIP switch setting is ignored and the program will always act as if it is enabled. If the Series 9800 program is configured for Liters or Imperial Gallons, this switch will control whether pump pressurization is enabled. If a pump has been idle for more than 10 minutes or this is the first use after startup, a maximum of.02 units of unrecorded volume will be pumped into the pump hydraulics during the pump's segment test.

Pressurization	SW1-5
Enabled	Closed
Disabled	Open

SW1-6 Authorization

This switch allows activation of the 9800 from some types of FMS. When the switch is closed, a 115 VAC (230 VAC International) signal must be present on the Control Feed line for pump activation to occur (required setting for Series 1000, TopKAT mechanical, and all non-Gasboy systems). When open, the 9800 ignores the Control Feed line (required setting for CFN, TopKAT top-mount, TopKAT electronic, or no fuel system).

Authorization	SW1-6	Fuel System
Yes	Closed	Series 1000 TopKAT mechanical All Non-Gasboy systems
No	Open	CFN TopKAT top-mount TopKAT electronic No fuel system

SW1-7 Totalizers

This switch should be set to open for normal operation. When closed, this switch enables you to reset the electronic totalizers. Refer to "View/Reset Totalizers" on page 125 for details.

Totalizers	SW1-7
Reset	Closed
Normal	Open

SW1-8 RS 485 Pump Stop Detection

This switch should be set to open (default) to enable RS-485 pump stop detection. The Gasboy RS 485 pump stop switch, when activated, places a serial break character on the RS 485 lines. When SW1-8 is open, this breaker character triggers the termination of the sale(s) immediately, if a transaction(s) is in progress.

This switch should be set to closed (in a TopKAT Two-wire Communication) to disable RS-485 pump stop detection. This resolves the issue associated with the false break characters being detected that may be introduced when two-wire communication is used.

SW2

This four-position switch pack serves dual purpose: as an address setting when communicating on the Gasboy RS-485 loop or TopKAT, or as a pulser output rate selector when pulser data is sent to a FMS other than a Gasboy CFN or TopKAT.

Address Switches

A unique address identifier must be set when the 9800 is connected to the Gasboy RS-485 pump loop via the 9800 RS-485 I/F PCB. Because there are 16 possible address combinations, up to 16 units (single or twin) may be connected to the pump loop. Addressing should start at 1 and continue sequentially through 16. The physical wiring order does not have to correspond with the address order; that is the first unit on the RS-485 loop does not have to be address 1. The chart below gives the switch settings and address selections. With the TopKAT option, the address must be set to 1.

Address	SW2-1	SW2-2	SW2-3	SW2-4
1	Closed	Closed	Closed	Closed
2	Open	Closed	Closed	Closed
3	Closed	Open	Closed	Closed
4	Open	Open	Closed	Closed
5	Closed	Closed	Open	Closed
6	Open	Closed	Open	Closed
7	Closed	Open	Open	Closed
8	Open	Open	Open	Closed
9	Closed	Closed	Closed	Open
10	Open	Closed	Closed	Open
11	Closed	Open	Closed	Open
12	Open	Open	Closed	Open
13	Closed	Closed	Open	Open
14	Open	Closed	Open	Open
15	Closed	Open	Open	Open
16	Open	Open	Open	Open

Pulser Output Rate Switches

When the 9800 is connected to an external control equipment other than a Gasboy CFN system (standalone), TopKAT top mount or TopKAT electronic, the pulser signals are sent out via the 9800 Pump I/F PCB. The pulse rate required by the monitoring equipment can be configured by setting the switches as shown in the chart below. The pulse rate represents pulses per gallon (PPG, US Gallons or Imperial Gallons) or pulses per liter (PPL, international). For US Gallons or Imperial Gallons configurations, the pulse rate can be up to 100 PPG for 9850A, 500 PPG for all other models. For Liters configurations, the pulse rate can be up to 10 PPL for the 9850A, 100 PPL for all other models. This switch may have to be sealed by a Weights and Measures paper seal, if the Series 9800 is used for the resale of product.

Leading zeros are always suppressed in the hundreds and tens positions to the left of the decimal point. When in standalone mode, positions to the right of the decimal point are displayed based on the pulse rate selected as shown in the table at right.

Pulse Rate	SW2-1	SW2-2	SW2-3
1	Closed	Closed	Closed
10	Open	Closed	Closed
100	Closed	Open	Closed
250	Open	Open	Closed
500	Closed	Closed	Open
None	Closed	Open	Open
None	Open	Open	Open

Pulse Rate	9800/9840	9850
1:1	XXX.	XXXX.
10:1	XXX.X	XXXX.X
100:1	XXX.XX	XXXX.XX
250:1	XXX.XXX	
500:1	XXX.XXX	

Timeout Switch

When the 9800 is in the standalone mode, it will turn off an active hose if it does not detect pulses for 4 minutes, 15 seconds. This timeout feature can be disabled by setting switch SW2-4 to OPEN.

Timeout	SW2-4
Enabled	Closed
Disabled	Open

ATC (Automatic Temperature Compensation) Information Sheet

By activating the magnet located at the opposite side of the totalizer, various items appear on the display:

1	Volume Display	Displays uncompensated volume	0023.43
2	Probe Temperature Display	Displays probe temperature in Celsius only	023.2
3	Flow Reat Display	Displays flow rate (in LPM only)	189.2
4	Software Version Display	Displays software version number	1.30
5	ATC Status Display	Displays ATC Status	842.2

On the status display, the rightmost digit (2) indicates whether or not temperature compensation is enabled, and if so, what product is being dispensed. 0=temperature compensation enabled; 1=product is gasoline and compensation is enabled; 2=product is diesel and compensation is enabled.

On the status display, the leftmost digits (842) are error indicators which are blank when the corresponding error condition is not active. When any of these digits are displayed, their meanings are: 8=temperature probe fault is detected; 4=pulser error occurred; 2=exceptional reset was detected.

Setting the DIP Switches

#	Use	Setting
1	Product 1	ON=Diesel; OFF=Gasoline
2	Product 2	ON=Diesel; OFF=Gasoline
3	Not used	
4	Not used	
5	Pulser Multiplier	ON=9850;OFF=9852/9853
6	# of probes	ON=2, OFF=1
7	Pulser Adder	ON=9840
8	ATC	ON=ATC on; OFF=ATC off

Battery Back-up Power Supply

9800 models can be equipped with an optional battery back-up power supply. This allows the last transaction data to be displayed for a minimum of 15 minutes. After the batteries reach a certain low-voltage point, the power will automatically shut off. If you need to shut off the battery power before the low-voltage point is reached, momentarily disconnect, then re-connect, the cable that plugs into P1 on the power supply.

Figure 61: 9800 Optional Battery Back-up Power Supply

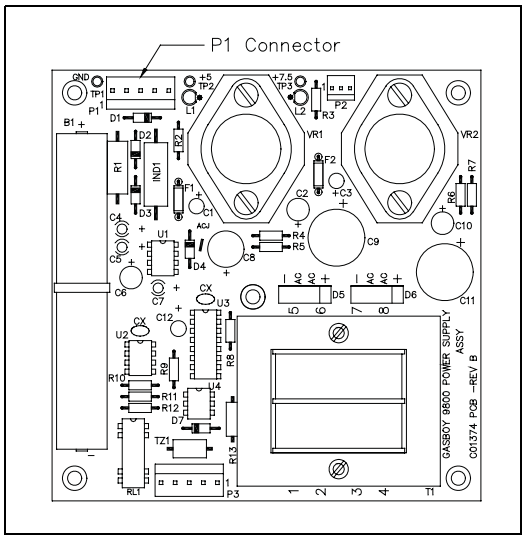

View/Reset Totalizers

Electronic Totalizers

Figure 62: 9800 Electronic Totalizers

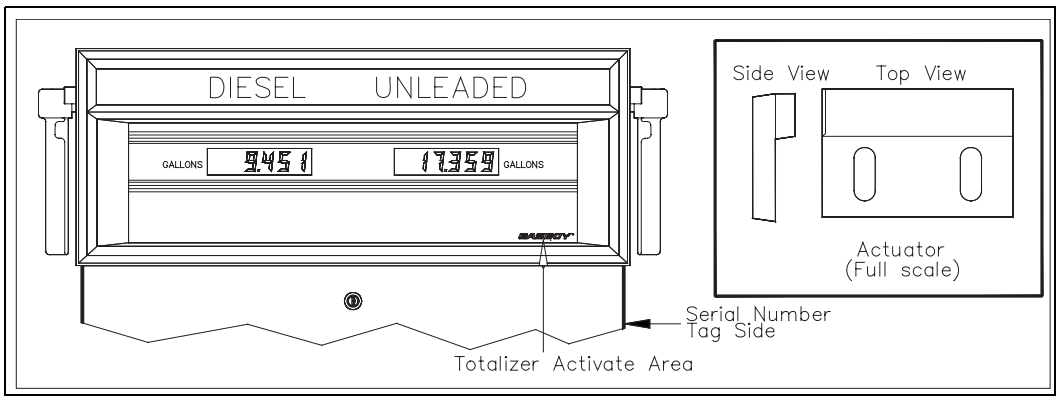

The 9800 stores a running quantity total for each pump side. These electronic totalizers work independent of the optional mechanical totalizers that may be installed, and are shown as whole gallons (liters) on the displays (decimal point is shown, although it is disregarded). The totalizer data is stored in battery-backed memory. The 9800 is supplied with an actuator (see Figure 62) which allows you to view and reset electronic totalizers.

When the 9800 is shipped, the actuator is attached with a tie wrap to the bracket at the lower right of the head assembly (viewed with display panels removed). At installation or start-up, cut the tie wrap and remove actuator. Retain it for future use.

To view the pump totalizers, ensure that the pump handles are off and no transactions are in progress. Locate the Gasboy dial face logo that is on the same pump side as the serial number tag (if equipped with the rear totalizer option, the totalizer can be activated from the Gasboy logo on either side of the pump). Touch the Gasboy logo with the actuator as shown. The totalizer data for each pump side will be displayed for 10 seconds. If more time is needed, touch the actuator to the logo for an additional 10-second period.

To reset the electronic totalizers, follow the disassembly procedure outlined in the section "Electronic Component Access" on page 117. Turn off the 9800 power switch. Close SW1-7 on the CPU PCB. Hold the actuator against the totalizer bracket and turn the power switch ON. The displays should change to all zeroes. Remove the actuator and open SW1-7.

Note: Returning SW1-7 to the open position prevents the totalizers from being reset the next time the actuator is used to read them.

Mechanical Totalizers

Some models of 9800 contain an optional mechanical totalizer for each pump side. Each totalizer has eight digits; seven whole gallons and one-tenth gallon column, eight whole digits for liters. The mechanical totalizers are located below each nozzle hook.

Operating Sequence

The exact sequence of events that occurs during the operation of a pump or remote dispenser is determined by various switch settings, inputs, and the user. A typical transaction is explained below:

Pump

1. Turn on the pump handle. If AC is present on the Control Feed line, the reset cycle begins. The display:
   - Goes blank for one second
   - Shows all 8s for one second (3 seconds for US Gallons or if SW1-5 is enabled)
   - Goes to 0.000 (gallons) or 0.00 (liters) and remains for one (1) second.
   - 9850A: goes to 0.00 (gallons) or 0.0 (liters) and remains for one (1) second or three (3) seconds for US Gallons or if SW1-5 is enabled.

   The pump motor turns on and the Reset Complete line becomes active. If equipped, the slow flow valve turns on.

2 The user begins to dispense fuel. Quantity will not be recorded on the display until 0.010 gallons (0.04 liters) are reached. However, all pulses will be sent out on the Pulser line, if equipped. At 0.010 gallons (0.04 liters), the fast flow valve turns on, if equipped. For the 9850A, quantities will not be recorded on the display until 0.04 gallons (0.1 liters).

3 The pump continues to run until one of the following occurs. These conditions turn off all relays.
- The handle is turned off.
- The Control Feed line is turned off.
- A pulser error is detected.
- A timeout of 255 seconds is reached (if SW2-4 is CLOSED). If connected to an FMS, the timeout loaded into the system will be used.
- A quantity of 990.000 gallons (9900.00 liters) is reached. If connected to an FMS, the limit set in the system will be used.
- For 9850A: A quantity of 999.00 gallons (9990.0 liters) is reached. If connected to an FMS, the limit set in the system will be used.
- The pump is halted by an operator of an FMS.
- An AC power failure occurs.

4 The 9800 continues to monitor for pulses until a 2-second period with no pulses occurs. At this time the transaction is considered completed.

Remote Dispenser

1 Turn on the pump handle. If AC is present on the Control Feed line, the reset cycle begins and the submersible pump turns on. The display:
- Goes blank for one second.
- Shows all 8s for one second or 3 seconds for US Gallons or if SW1-5 is enabled.
- Goes to 0.000 (gallons) or 0.00 (liters).
- 9850A goes to 0.00 (gallons) or 0.0 (liters) and remains for one second or 3 seconds for US Gallons or if SW1-5 is enabled.

The slow flow valve will turn on within 2, 3, or 4 seconds, depending on the setting of the Time Delay switches on the CPU PCB. This will give a total time of 4, 5, or 6 seconds between the time the submersible pump turns on and the time the slow flow valve turns on.

2 The user begins to dispense fuel. Quantity will not be recorded on the display until 0.010 gallons (0.04 liters) are reached. However, all pulses will be sent out on the Pulser line, if equipped. At 0.010 gallons (0.04 liters), the fast flow valve turns on. For the 9850A, quantities will not be recorded on the display until.04 gallons (.1 liters).

3 The remote dispenser continues to run until one of the following occurs. These conditions turn off all relays:
- The handle is turned off.
- The Control Feed line is turned off.
- A pulser error is detected.
- A timeout of 255 seconds is reached (if SW2-4 is CLOSED). If connected to an FMS, the timeout loaded into the system will be used.
- A quantity of 990.000 gallons (9900.00 liters) is reached. If connected to an FMS, the limit set in the system will be used.

- For 9850A: A quantity of 999.00 gallons (9990.0 liters) is reached. If connected to an FMS, the limit set in the system will be used.
- The remote dispenser is halted by an operator of an FMS.
- An AC power failure occurs.

4 The 9800 continues to monitor for pulses until a 2-second period with no pulses occurs. At this time the transaction is considered completed.

Standalone Mode Error Handling

When operating the pump/dispenser in standalone mode (not connected to an FMS), the 9800 displays two-digit error transaction codes on the LCD display when transactions are terminated abnormally (by a means other than turning off the pump handle). Four possible error conditions may be displayed, as shown in the following table.

Code	Condition
55	Power Failure
56	Pulse Error
57	Tmed Out
58	Limit Cutoff

The error codes are displayed for two (2) seconds at the left of the LCD window, alternating with a 5-second display of the last sale amount. The display alternates between the two until a new transaction begins. When an error occurs, the user should note the error code and relay the information to the system administrator.

Transaction error codes are displayed only when the pump/dispenser is operating in standalone mode. When connected to an FMS, (on-line mode), transaction error codes are transmitted back to the FMS with the completed transaction data.

7 – Start-Up and Test

Installation Completion Checklist

Review the information in this section to verify proper installation of the Series 9800 dispensing unit. If the installation does not meet criteria listed, correct the problem before start-up.

CAUTION

To avoid damage to the CPU PC board, verify if the RESET COMPLETE, FAST FLOW, SUBM. STARTER DRIVE, and SLOW and FAST SATELLITE RETURN wires are not shorted to conduit or chassis.

1. The unit must be properly secured to the island.
2. All plumbing must be complete and tight. All liquid-carrying lines must be checked for leaks.
3. When DC pulser or RS-485 lines are used in the pump for connecting to Gasboy FMS, the AC and DC wires must not share any conduits, junction boxes, or troughs, except as noted in Wiring on page 53, Conduit and Pulse Output or RS-485 Wiring, and MDE-4319 TopKAT Installation Manual.
4. All conduit work must be complete. All junction box covers must be secured. Conduits should not be sealed until the wiring is verified through proper operation.
5. The unit must be properly grounded.

CAUTION

Before any testing begins, remove any water in the tank through a fill opening, using a suitable pump. Do not use the Gasboy pump or remote dispenser and submersible pump to remove water. Serious damage may occur.

6. A sufficient volume of fuel must be put in the tank to ensure that the liquid level is above the bottom of the suction pipe (suction pumps) or is high enough to allow the submersible pump to operate efficiently (remote dispensers).

Start-up

After successfully verifying the installation against the completion checklist, the unit is ready for start-up. Follow the procedure below to perform an orderly start-up of the Series 9800A.

1. Verify if all switches on the CPU PCB are set properly for the various operating conditions as explained in the section "Pump/Remote Dispenser Operation" on page 117.
2. Turn on the circuit breakers for the microprocessor and fluorescent lights. Ensure that both the lights are lit.
3. Turn on the 9800 power switch.
4. Authorize the hose for side 1 through the FMS, if available.
5. Remove the nozzle for side 1 from its holder and turn on the pump handle. Verify if the display goes through the proper reset sequence as explained in "Operating Sequence" on page 126.
6. Dispense fuel. Verify if the high flow valve opens, if equipped. Check all plumbing for leaks at this time.
7. Turn the pump handle off. Open the nozzle. No fuel should be dispensed at this time.
8. Verify if the correct quantity was recorded by the FMS, if available.
9. If applicable, repeat steps 4 to 8 for side 2.
10. Run the unit through all standard calibration procedures.
11. Reset the electronic totalizers as described in View/Reset Totalizers on page 125.

Post Start-up Tests for 9800A

Voltage

The incoming voltage to the pump and remote dispenser should be checked and any reading not within 10% of rated voltage should be corrected before testing is continued. When testing suction pumps, take voltage readings while the suction pump is operating on bypass and also while making a delivery. Any voltage drop in excess of 10% during either of these operating states should be considered a low voltage condition. Corrective action should be taken to ensure an adequate power supply to the pump.

Tightness

After determining that the pump is operating satisfactorily and the system is fully primed, check the pump and piping to ensure that all connections are tight. In the case of a remote dispenser you should follow the submersible pump manufacturer's instructions to check the system for tightness. It is recommended that the piping for the tank and other piping be done after this test has been completed.

Belts (Suction Pumps Only)

Since belts stretch slightly during the first few minutes of operation, check the belt tension after completing the operational test. A properly tightened belt will permit twisting the belt 180 degrees midway between the motor and pump pulleys.

On the 9853AHC, 9840A, 9852ATW2, and 9853ATW2 models, the belt can be tightened by loosening the hex nut which holds the idler pulley and sliding the pulley to either side to obtain the correct belt tension of 6-3/4 lbs, + 3/4 (30N, +3.3N). When the adjustment is complete, remember to retighten the hex nut.

On the 9852A, 9853A, and 9852ATW1 models, the belt can be tightened by loosening the cap screw which holds the idler arm and sliding the arm to obtain the correct belt tension of 6-3/4 lbs, + 3/4 (30N, +3.3N). When the adjustment is complete, retighten the cap screw.

On the 9850A model, the belt can be tightened by loosening the motor mounting bolts and sliding the motor to obtain the correct belt tension of 6-3/4 lbs, + 3/4 (30N, +3.3N). When the adjustment is complete, remember to retighten the motor mounting bolts.

Calibration

All Gasboy pumps and remote dispensers are adjusted for accurate measurement at the factory. However, since the conditions of the installation can affect pump accuracy, it is the responsibility of the installer to check the pump for accuracy and make any needed adjustments. Where required, it is the owner's responsibility to report this device to the local Weights and Measures officials for their inspection before the unit is put into service. Calibration methods are given in gallons. When calibrating liter pumps, use the same procedure, but convert gallons to liters (1 gallon = 3.78 liters).

All Models Except 9850A and 9850AX

The adjustment of measurement is accomplished by breaking the seal wire and removing the Seal Pin. This will permit the Index Disc, to be turned either counterclockwise (-) to decrease the measurement, or clockwise (+) to increase the measurement. A variation of approximately one cubic inch in measurement is obtained by turning the Index Disc five holes. After the measurement has been properly adjusted, the seal pin and seal wire should be replaced.

Note: When calibrating the 9840A and 9840AX models, the adjustment of measurement may be made by adjusting either or both meters. However, it is recommended that the adjustment be made gradually by turning the Index Disc on each meter one hole at a time, while alternating from meter to meter, in order to keep the meter outputs as equal as possible.

Figure 63: Calibrating the 9840A and 9840AX models

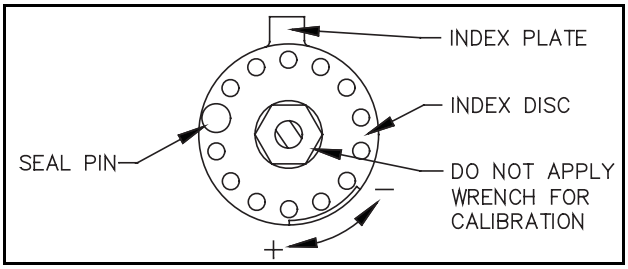

9850A and 9850AX Models

1. Check meter registration by delivering product to a reliable, accurate, 50 or 100 gallon prover.

2. Convert the amount of the error to gallons per 100 (which gives a percent figure) or gallons per thousand (which gives tenths of a percent figure).

3. Read the setting indicated on the adjuster. The amount of the error is added to or subtracted from this setting. The adjuster is shown in graduated divisions of 1%, 0.1%, 0.02%.

4. Reset the adjuster by loosening the clamp.
   - To decrease the amount delivered, turn the thimble IN on the barrel.
   - To increase the amount delivered, turn the thimble OUT (unscrew it). After resetting the adjuster, tighten the clamp.

   Note: Always make the final adjustment by turning IN on the thimble. If the new setting is a higher number than the original, turn it back beyond the desired figure and come back to it.

   Example: Assume the adjuster setting at the start of the test reads 2.05. Product is run through the meter into a prover until the counter registers 100 gallons. Assume the prover shows a volume of 98.7 gallons (1.3 gallons short). Since the adjuster graduations are in percent readings, this 1.3 could be added directly to the adjuster reading (2.05 plus 1.3 equals 3.35 on the adjuster). A rerun through the meter should then show 100 gallons both on the meter counter and on the prover.

   If you are measuring in increments of less than 100 gallons, use the formula to determine the percentage by which the adjuster must be adjusted.

   $$(P - M) / M = A\%$$

   where P is the prover measurement, M is the meter reading, and A% is the percent adjustment for the adjuster.

Post Start-up Tests for 9800Q

Voltage

The incoming voltage to the pump and remote dispenser should be checked and any reading not within 10% of rated voltage should be corrected before testing is continued. When testing suction pumps, take voltage readings while the suction pump is operating on bypass and also while making a delivery. Any voltage drop in excess of 10% during either of these operating states should be considered a low voltage condition. Corrective action should be taken to ensure an adequate power supply to the pump.

Tightness

After determining that the pump is operating satisfactorily and the system is fully primed, check the pump and piping to ensure that all connections are tight. In the case of a remote dispenser you should follow the submersible pump manufacturer's instructions to check the system for tightness. It is recommended that the piping for the tank and other piping be done after this test has been completed.

Belts (Suction Pumps Only)

Since belts stretch slightly during the first few minutes of operation, check the belt tension after completing the operational test.

The belt can be tightened by loosening the hex nut which holds the idler pulley and sliding the pulley to either side. Tighten the belt sufficiently to reduce slippage, but avoid overtightening.

Calibration

All Gasboy pumps and remote dispensers are adjusted for accurate measurement at the factory. However, it is the responsibility of the installer to check the pump for accuracy, and make any needed adjustments. Where required, it is the owner’s responsibility to report this device to the local Weights and Measures officials for their inspection before the unit is put into service.

Each meter is equipped with a mechanism for calibration, located on the side of the meter. To adjust the volume dispensed, proceed as follows:

1. Check meter registration by delivering product to a reliable, accurate, 50 or 100 gallon prover.
2. Remove the seal wire from the locking pin.
3. Remove the locking pin and turn the wheel to adjust the measurement. Turn clockwise to decrease the amount in the prover to match the display, turn counterclockwise to increase the amount in the prover to match the display. Moving the wheel one hole position changes the calibration by 2/3 cubic inch per 5 gallons. To change by half of this amount, you can utilize the alternate locking pin hole on the opposing side of the calibration wheel.
4. Repeat the process until the volume in prover and amount recorded are within tolerance.

After calibration is complete, reinstall the locking pin and secure it in place using a seal wire.

This page is intentionally left blank.

8 – Preventive Maintenance

General

Gasboy pumps and remote dispensers are designed and constructed to give many years of uninterrupted service. In fact, hundreds of operators report years of trouble-free operation with absolutely no service expense. However, certain parts of a pump are bound to wear. Therefore, a periodic inspection, at least twice a year, for fuel leaks, belt tension and condition, lubrication, and strainer cleanliness, is recommended. If this procedure is followed, any small adjustments that are necessary can be made before expensive breakdowns occur. This results in continuous, profitable service from your Gasboy equipment.

Note: Procedures that require disassembly of portions of the pump/remote dispenser should be performed by competent service personnel.

⚠ WARNING

To reduce the risk of electrical shock while servicing, turn off and lock out all power to the pump/remote dispenser. In submersible pump applications turn off and lockout power to the submersible pump and any other remote dispenser, which use that submersible pump. AC power can feed back into a shut-off dispenser when remote dispensers share a common submersible pump or starter relay. Always turn off and lock out all power to the remote dispenser and submerged pumps at the master panel and close any impact valve before performing any maintenance or service to the remote dispenser, including the changing of any fuel filters or strainers. Also block islands, such that no vehicles can pull up to the remote dispenser when the dispenser is being worked on.

Hints for Better Pump Performance

Demand Competent Service

If your pump stops or fails to operate properly, do not depend upon the repair service of a general mechanic unless he is thoroughly familiar with the mechanism. Demand the service of a competent representative of the pump manufacturer. Gasboy has a distributor network which services fuel dispensing and management systems in every section of the country.

Use Authorized Parts

If excessive wear, rust, or corrosion of parts cause inefficient operation, it is recommended that you replace them immediately. However, if you want the best results and continuity of the Underwriters' Label on your pump, ensure that they are new authorized service parts supplied by Gasboy. Every part of a pump or remote dispenser is carefully designed for a particular purpose. If it is replaced by an incorrect or substandard substitute, pump operation will be unsatisfactory. Always use new gaskets or seals when you service or rebuild Gasboy equipment. Do not reuse old ones.

Operate with Reasonable Care

Like any machine, the pump or remote dispenser that is operated with reasonable care will last longer and give better service. Abuse should be avoided (such as, dropping the nozzle on the ground, operating the unit with a dirty strainer, dragging the hose across the concrete island or driveway, running the pump with the nozzle closed for more than two minutes, and so on). The time and care given to your pumps will be returned to you in the form of dependable service.

Preventive Maintenance Checklist for 9800A

Keep Water Out

Water tends to collect in underground and above ground storage tanks. This is due to moisture-laden air that is drawn and condensed in the storage tank, or due to defective fill openings that are not properly protected with watertight covers. Storage tanks should be checked after every fill-up for accumulated water that should be removed with a sump pump, to forestall serious damage to equipment. Water, sediment, and other foreign matter that accumulates in the tank can be drawn up into the pump or remote dispenser and cause failures.

Lubricate the Pump

On all models, except the 9850A, the pumping unit should be lubricated every six months or every 100,000 gallons (378,000 liters). Turn off and lock out AC power. Apply a few drops of a light grade oil (SAE 10) to the felt pad located on the pump body slightly above the shaft which connects to the pump pulley. Oil used should be suitable for temperatures ranging from -40 F to 180 F.

All rotary pump models, except the 9850A, are packed with special "V" packings, which can be easily replaced by slipping the pump pulley off the shaft and removing the cap screws, retainer plate, and oil well felt. Pull the bearing from the pump shaft, to allow the new packing rings to be inserted. The packing gland is spring-loaded to keep packing tight at all times. When old packing rings are removed, ensure to replace them with a like number of new rings. It is important to fill the stuffing box to prevent leaks.

On the 9850A, the pumping unit ball bearings require lubrication about every two to three months in average service. Turn off and lock out AC power. Use a light, #2 lithium-base, ball bearing type grease. Apply it slowly with a hand gun until grease begins to escape from the grease relief fittings. After lubrication, a small amount of grease may escape from the drain holes under the bearing chamber. It is normal and proper for a small amount, to work past the sealed bearing initially, for a short while.

Maintain the Meter

If the meter begins to leak around the drive shaft extending from the top of the meter unit, it may be necessary to replace the Teflon seals. Turn off and lock out the AC power. Remove the unit from the cabinet. Remove the outer packing gland plate and the upper bearing assembly. When replacing the new seals (reddish brown and black) and the O-ring into the packing cavity of the meter cover, be careful not to damage them.

Hose Retrievers (If Applicable)

The cable reel assembly does not require lubrication but the cable should be checked periodically and replaced when it appears worn or frayed.

Keep the Non-computer Lubricated

Although the non-computers used in Gasboy pumps are carefully adjusted and lubricated at the factory before shipment, they require (as do all mechanical parts) occasional cleaning and lubrication when in service. The intervals at which this should be done vary with conditions of operation, but under normal conditions it is necessary only twice a year, or after each 100,000 gallons (378,000 liters) delivered.

Turn off and lock out the AC power to the pump. It's easier to clean and oil the non-computer if you remove it from the pump. Clean the non-computer with compressed air and wipe all accessible parts (such as figure wheel drums) with a clean cloth.

⚠ CAUTION

Always wear protective safety goggles or glasses when using compressed air. Never use solvents, such as gasoline or kerosene, as this will become trapped in many of the inaccessible bearings and dissolve the new lubricant when it is applied.

A light, non-acid type oil (SAE 10) is recommended because this gives maximum protection in varying temperatures. The oil must also be acid-free to ensure that it does not cause corrosion of the cast metal parts. A long handled, fine lettering brush is very convenient for applying the oil to all bearings and shafts and for applying light, non-fluid oil (grease with body similar to that of chassis lubricant) to the bevel type gears.

Clean the Dial Face

Clean the dial face with a soft, clean, and damp cloth as often as necessary.

Clean the Strainer

Clean the strainer immediately after the pump has been installed and tested, and again after a few hundred gallons/liters have been delivered. Thereafter, clean it once every six months, or as required.

The symptoms of a dirty or clogged strainer in a pump are slow delivery, noisy operation, and pulsation. Before starting, close the 10RU safety shutoff valves under each pump or remote dispenser you are working on. Then follow these directions:

Pump: Turn off and lock out AC power to the pump. Locate the suction strainer cap on the plumbing unit and unscrew it to access and remove the strainer. Use compressed air to blow the dirt out of the strainer.

Remote Dispenser: Turn off and lock out AC power to the remote dispenser, submersible pump, and any other remote dispensers which use that submersible pump. Locate the strainer cap on the meter and unscrew it to access and remove the strainer. Use compressed air to blow the dirt out of the strainer.

⚠ CAUTION

Always wear protective safety goggles or glasses when you use compressed air

Filter

If the unit is equipped with a filter, check and change it at regular intervals. A dirty filter in a pump or remote dispenser will cause a slower delivery rate. Refer to the accessories section of your parts manual to ensure that you replace the filter with the one designed for your model. Always use a drip pan directly below the filter when you remove the cartridge to prevent contamination of both the soil and the electrical components within the cabinet.

Cleaning By-pass and Regulating Valve Assemblies (Suction Pumps Only)

By-pass and regulating valve assemblies should be removed only for cleaning and should be checked if there is notable loss in system performance. No adjustment is required. To remove the valves, turn off and lock out AC power to the unit. If the suction pump is in a remote dispenser, remove the separator cover and clamp plate, to allow the by-pass valve assembly and regulating valve assembly to be lifted from place.

Adjusting the Belts (Suction Pumps Only)

With the proper care, belts will give good service. A loose belt not only cuts down dispensing speed, due to slipping, but also results in excessive wear. A properly tightened belt will allow twisting the belt 180 degrees midway between the motor and the pump pulleys. Before adjusting any belt, turn off AC power to the pump/remote dispenser.

On the 9853AHC, 9840A, 9852ATW2, and 9853ATW2 models, the belt can be tightened by loosening the hex nut which holds the idler pulley and sliding the pulley to either side to obtain the correct belt tension of 6-3/4 lbs, + 3/4 (30N, +3.3N). When the adjustment is complete, retighten the hex nut.

On the 9852A, 9853A, and 9852ATW1 models, the belt can be tightened by loosening the cap screw which holds the idler arm and sliding the arm to obtain the correct belt tension of 6-3/4 lbs, + 3/4 (30N, +3.3N). When the adjustment is complete, remember to retighten the cap screw.

On the 9850A model, the belt can be tightened by loosening the motor mounting bolts and sliding the motor to obtain the correct belt tension of 6-3/4 lbs, + 3/4 (30N, +3.3N). When the adjustment is complete, remember to retighten the motor mounting bolts.

Preserve the Finish of Your Pumps

Nearly all gasoline pumps are installed outdoors where their surfaces are subjected to the action of the weather. As a result, it is necessary to give the finish a reasonable amount of care, to maintain an attractive appearance.

The finish on Gasboy pump housings is a high-heat baked synthetic enamel, similar to that used on automobiles. The life of this finish can be lengthened several years if, at regular intervals, the painted surfaces are thoroughly cleaned with a high grade automobile polish and then protected with a coat of paste wax. Do not use abrasive cleaners or polish. Do not use high pressure spraying equipment.

To retain the unmarked finish on stainless steel, occasional cleaning is required. In corrosive atmospheres, such as coastal areas, a more frequent cleaning schedule is necessary. Under ordinary conditions, washing with detergent or soap and water, followed by a clean water rinse, is sufficient. If hard water is used, the surface should be wiped dry with a soft clean cloth, to prevent the formation of water spots. Marks or spots, such as grease, oily fingerprints and smudges which resist soap and detergents, will have to be removed with a stronger cleaner (**DO NOT** use ordinary steel wool as iron particles may adhere to the surface and cause corrosion). Care should be taken in choosing a cleaner because any cleaning compounds or powders which contain abrasives can scratch a mill-rolled finish. Care must be exercised in their use to run in the direction of the polishing lines in the steel, never across them. After cleaning, an application of paste wax is recommended to protect the surface and prolong the interval between cleaning.

Preventive Maintenance Checklist for 9800Q

Keep Water Out

Water tends to collect in underground and above ground storage tanks. This is due to moisture-laden air that is drawn and condensed in the storage tank, or due to defective fill openings that are not properly protected with watertight covers. Storage tanks should be checked after every fill-up for accumulated water that should be removed with a sump pump, to forestall serious damage to equipment. Water, sediment, and other foreign matter that accumulates in the tank can be drawn up into the pump or remote dispenser and cause failures.

Hose Retrievers (If Applicable)

The cable reel assembly does not require lubrication but the cable should be checked periodically and replaced when it appears worn or frayed.

Dial Face

Clean the dial face with a soft, clean, damp cloth as often as necessary.

Clean the Strainer

Clean the strainer immediately after the pump has been installed and tested, and again after a few hundred gallons/liters have been delivered. Thereafter, clean it once every six months, or as required.

The symptoms of a dirty or clogged strainer in a pump are slow delivery, noisy operation, and pulsation. Before starting, close the 10RU safety shutoff valves under each pump or remote dispenser you are working on. Then follow these directions:

Pump: Turn off and lock out AC power to the pump. Locate the suction strainer cap on the plumbing unit and unscrew it to access and remove the strainer. Use compressed air to blow the dirt out of the strainer.

Remote Dispenser: Turn off and lock out AC power to the remote dispenser, submersible pump, and any other remote dispensers which use that submersible pump. Locate the strainer cap on the meter and unscrew it to access and remove the strainer. Use compressed air to blow the dirt out of the strainer.

⚠ CAUTION

Always wear protective safety goggles or glasses when you use compressed air

Filter

If the unit is equipped with a filter, check and change it at regular intervals. A dirty filter in a pump or remote dispenser will cause a slower delivery rate. Refer to the accessories section of your parts manual to ensure that you replace the filter with the one designed for your model. Always use a drip pan directly below the filter when you remove the cartridge to prevent contamination of both the soil and the electrical components within the cabinet.

Adjusting the Belts (Suction Pumps Only)

With the proper care, belts will give good service. A loose belt not only cuts down dispensing speed, due to slipping, but also results in excessive wear. The belt can be tightened by loosening the hex nut which holds the idler pulley and sliding the pulley to either side to obtain the correct belt tension. Tighten the belt sufficiently to reduce slippage, but avoid overtightening.

Preserve the Finish of Your Pumps

Nearly all gasoline pumps are installed outdoors where their surfaces are subjected to the action of the weather. As a result, it is necessary to give the finish a reasonable amount of care if an attractive appearance is to be maintained.

The finish on Gasboy pump housings is a high-heat baked synthetic enamel, similar to that used on automobiles. The life of this finish can be lengthened several years if, at regular intervals, the painted surfaces are thoroughly cleaned with a high grade automobile polish and then protected with a coat of paste wax. Do not use abrasive cleaners or polish. Do not use high pressure spraying equipment.

To retain the unmarked finish on stainless steel, occasional cleaning is required. In corrosive atmospheres, such as coastal areas, a more frequent cleaning schedule is necessary. Under ordinary conditions, washing with detergent or soap and water, followed by a clean water rinse, is sufficient. If hard water is used, the surface should be wiped dry with a soft clean cloth to prevent the formation of water spots. Marks or spots, such as grease, oily fingerprints and smudges which resist soap and detergents, will have to be removed with a stronger cleaner (DO NOT use ordinary steel wool as iron particles may adhere to the surface and cause corrosion). Care should be taken in choosing a cleaner because any cleaning compounds or powders which contain abrasives can scratch a mill-rolled finish. Run the cleaner in the direction of the polishing lines in the steel, never across them. After cleaning, an application of paste wax is recommended to protect the surface and prolong the interval between cleaning.

This page is intentionally left blank.

7300 West Friendly Avenue · Post Office Box 22087
Greensboro, North Carolina 27420
Phone 1-800-444-5529 · http://www.gasboy.com · Printed in the U.S.A.
MDE-4341B Series 9800A/9800Q Pumps and Dispensers Installation/Operation Manual · July 2007