Introduction

Purpose

This manual provides instructions to upgrade an Encore® S bezel door to an Encore S E-CIM™ door with monochrome display using Conversion Kit M14061K001 (Encore S bezel doors are no longer available).

Instructions include changing out the entire main door and reusing most of the existing hardware.

Note: The size of some hardware components will change. The hardware components used in E-CIM door and Encore S door may be different.

It is recommended that cabling connections be carefully noted before disconnecting and moving components. For more information, refer to "Appendix: Wiring Diagrams" on page 31.

To complete this installation, install a 6-inch printer assembly.

Intended Users

This manual is intended for Gilbarco®-trained and certified Authorized Service Contractors (ASCs).

Table of Contents

Selecting Door

Select the Encore S E-CIM door based on the corresponding display type and nozzle boots per side needed.

Note: The E-CIM bezel does not support the SmartPad™ option (Canada only).

Required Tools and Materials

The following tools and materials are required to install the kits:

- Phillips® Screwdriver
- T15 Torx Head Screwdriver
- 7- and 8-mm Nut Driver or Socket Set
- 1/4-inch Socket (Nut Driver)
- Diagonal Cutters
- Needle Nose Pliers
- CRIND® Diagnostic Card (Q12534-170)
- Double-sided tape
- Electrostatic Discharge (ESD) Wrist Strap
- Integrated Circuits (IC) Extraction Tool

The following hardware components can be reused:

- Door Nodes/Main Displays
- Price per Unit (PPU) and Grade Select Buttons
- Nozzle Boot Switch
- Totalizers
- Air-gap Panel
- Call Electronics Printed Circuit Board (PCB), if present
- Existing Options [scanner, cash acceptor, TRIND®, Global Contactless Module (GCM), etc.]

Configured Kits

M14061K001 is a configured kit. When ordering, you will be asked for information regarding the graphics template, speaker, and so on. Also, provide the serial number of the unit(s) you intend to upgrade to the Customer Service Representative (CSR) at the time of ordering.

Notifying Weights and Measures (W&M)

It is recommended that you contact your local W&M officials, and inform them that the unit has been upgraded with a new door, and that the W&M Inspection Decal is no longer present on the unit. No metrological changes have been made to the unit.

Parts List

M14061K001 Kit for Unit with Monochrome Display

The following table lists the parts included in the M14061K001 Kit:

Item #	Description	Part Number	Quantity
1	Keypad, Americans with Disabilities Act (ADA)	M12287B001	1
2	Cable, 7-button and Encrypting PIN Pad (EPP) ADA Keypad E-CIM	M07957A008	1
3	Screw Sel Tp Hex Hd 6-20X.38 Stl Zn Pl	Q11677-24	14
4	Bracket, Card Reader Encore E-CIM and Standard*	M07574B001	1
5	Bracket Hybrid Card Reader (HCR)2, Wayne®-Encore-E-CIM**	M13674B001	1
6	Gasket, Card Reader, Universal	M13127B006	1
7	Keypad with Back Plate, Customer Input ADA CRIND, E-CIM	M07689A102	1
8	Gasket, EPP Keypad With Adhesive	M13209B002	1
9	Keypad, Monochrome Softkey Display	M01254B003	1
10	Tie Cable	Q10178-01	1
11	Encore S Bezel to E-CIM Bezel Conversion Kits (M14061K0XX) Instructions for Encore S	MDE-5161	1
12	Assy, PPU Shield (see comments)	M12962A001	1
13	Washer Flat.170X.375X.030 Nylon	Q10385-09	3
14	Printer Bracket Chute Assy	M17414A001	1
15	Quick Release Pin	M17289B001	2
16	Fastener Super Secure 8311 Plastic	K90905	2
17	Paper Holder Assy, E700	M17280A001	1
18	Spindle, E700 6-inch Paper Roll	M17284B001	1
19	M3 Hex Keyhole Standoff	M17568B001	3
20	Clamp, Snap-In	M17640B001	1
21	Cable, Universal Serial Port (USB)/No Ground/+24V Hengstler® Sliding	M06745A010	1
22	Label, Paper Loading	M17677B001	1

**M07574B001 is used with dual-head card reader.*
***M13674B001 is used with HCR.*

Related Documents

Document Number	Title	GOLD℠ Library
MDE-3804	Encore and Eclipse Start-up/Service Manual	• Encore and Eclipse • Service Manual
MDE-3893	Encore and Eclipse Series Owner's Manual	• Encore and Eclipse • Encore Eclipse Installers • Domestic Warranty and Owners Manuals • Export Warranty and Owners Manuals
MDE-4699	Applause™ Media System Installation, Service, and Parts Manual	• Applause Media System • SMART Connect™ • Encore and Eclipse
PT-1936	Encore Series Pumps and Dispensers Illustrated Parts Manual	• Encore and Eclipse • Parts Manual • Encore Eclipse Installers

Abbreviations and Acronyms

Term	Description
ADA	Americans with Disabilities Act
ASC	Authorized Service Contractor
CCN	CRIND Control Node
CRIND	Card Reader in Dispenser
CPR	Cardiopulmonary Resuscitation
CSR	Customer Service Representative
DEF	Diesel Exhaust Fluid
DIN	Deutsche Industrie Norm
E-CIM	Enhanced Customer Interface Module
EPP	Encrypting PIN Pad
ESD	Electrostatic Discharge
GCM	Global Contactless Module
GOLD	Gilbarco Online Documentation
HCR	Hybrid Card Reader
IC	Integrated Circuits
LED	Light Emitting Diode
LON	Local Operating Network
NEC®	National Electrical Code
NFPA	National Fire Protection Association
OSHA	Occupational Safety and Health Administration
PCA	Printed Circuit Assembly
PCB	Printed Circuit Board
PPU	Price per Unit
SEMS	Pre-assembled Washers and Screws
STP	Submersible Turbine Pumps
TAC	Technical Assistance Center
TRIND	Transmitter/Receiver in Dispenser
UL®	Underwriters Laboratories
USB	Universal Serial Bus
W&M	Weights and Measures

Important Safety Information

Notes: 1) Save this Important Safety Information section in a readily accessible location.

2) Although DEF is non-flammable, Diesel is flammable. Therefore, for DEF cabinets that are attached to Diesel dispensers, follow all the notes in this section that pertain to flammable fuels.

This section introduces the hazards and safety precautions associated with installing, inspecting, maintaining, or servicing this product. Before performing any task on this product, read this safety information and the applicable sections in this manual, where additional hazards and safety precautions for your task will be found. Fire, explosion, electrical shock, or pressure release could occur and cause death or serious injury, if these safe service procedures are not followed.

Preliminary Precautions
You are working in a potentially dangerous environment of flammable fuels, vapors, and high voltage or pressures. Only trained or authorized individuals knowledgeable in the related procedures should install, inspect, maintain, or service this equipment.

Emergency Total Electrical Shut-Off
The first and most important information you must know is how to stop all fuel flow to the pump/dispenser and island. Locate the switch or circuit breakers that shut off all power to all fueling equipment, dispensing devices, and Submerged Turbine Pumps (STPs).

WARNING

The EMERGENCY STOP, ALL STOP, and PUMP STOP buttons at the cashier's station WILL NOT shut off electrical power to the pump/dispenser. This means that even if you activate these stops, fuel may continue to flow uncontrolled.

You must use the TOTAL ELECTRICAL SHUT-OFF in the case of an emergency and not the console's ALL STOP and PUMP STOP or similar keys.

Total Electrical Shut-Off Before Access
Any procedure that requires access to electrical components or the electronics of the dispenser requires total electrical shut off of that unit. Understand the function and location of this switch or circuit breaker before inspecting, installing, maintaining, or servicing Gilbarco equipment.

Evacuating, Barricading, and Shutting Off
Any procedure that requires access to the pump/dispenser or STPs requires the following actions:

- An evacuation of all unauthorized persons and vehicles from the work area
- Use of safety tape, cones, or barricades at the affected unit(s)
- A total electrical shut-off of the affected unit(s)

Read the Manual
Read, understand, and follow this manual and any other labels or related materials supplied with this equipment. If you do not understand a procedure, call the Technical Assistance Center (TAC) at 1-800-743-7501. It is imperative to your safety and the safety of others to understand the procedures before beginning work.

Follow the Regulations
Applicable information is available in National Fire Protection Association (NFPA) 30A; *Code for Motor Fuel Dispensing Facilities and Repair Garages*, NFPA 70; *National Electrical Code (NEC)*, Occupational Safety and Health Administration (OSHA) regulations and federal, state, and local codes. All these regulations must be followed. Failure to install, inspect, maintain, or service this equipment in accordance with these codes, regulations, and standards may lead to legal citations with penalties or affect the safe use and operation of the equipment.

Replacement Parts
Use only genuine Gilbarco replacement parts and retrofit kits on your pump/dispenser. Using parts other than genuine Gilbarco replacement parts could create a safety hazard and violate local regulations.

Safety Symbols and Warning Words

This section provides important information about warning symbols and boxes.

Alert Symbol

This safety alert symbol is used in this manual and on warning labels to alert you to a precaution which must be followed to prevent potential personal safety hazards. Obey safety directives that follow this symbol to avoid possible injury or death.

Signal Words
These signal words used in this manual and on warning labels tell you the seriousness of particular safety hazards. The precautions below must be followed to prevent death, injury, or damage to the equipment:

DANGER: Alerts you to a hazard or unsafe practice which will result in death or serious injury.

WARNING: Alerts you to a hazard or unsafe practice that could result in death or serious injury.

CAUTION with Alert symbol: Designates a hazard or unsafe practice which may result in minor injury.

CAUTION without Alert symbol: Designates a hazard or unsafe practice which may result in property or equipment damage.

Working With Fuels and Electrical Energy

Prevent Explosions and Fires
Fuels and their vapors will explode or burn, if ignited. Spilled or leaking fuels cause vapors. Even filling customer tanks will cause potentially dangerous vapors in the vicinity of the dispenser or island.

DEF is non-flammable. Therefore, explosion and fire safety warnings do not apply to DEF lines.

No Open Fire

Open flames from matches, lighters, welding torches or other sources can ignite fuels and their vapors.

No Sparks - No Smoking

Sparks from starting vehicles, starting or using power tools, burning cigarettes, cigars or pipes can also ignite fuels and their vapors. Static electricity, including an electrostatic charge on your body, can cause a spark sufficient to ignite fuel vapors. Every time you get out of a vehicle, touch the metal of your vehicle, to discharge any electrostatic charge before you approach the dispenser island.

Working Alone

It is highly recommended that someone who is capable of rendering first aid be present during servicing. Familiarize yourself with Cardiopulmonary Resuscitation (CPR) methods, if you work with or around high voltages. This information is available from the American Red Cross. Always advise the station personnel about where you will be working, and caution them not to activate power while you are working on the equipment. Use the OSHA Lockout/Tagout procedures. If you are not familiar with this requirement, refer to this information in the service manual and OSHA documentation.

Working With Electricity Safely

Ensure that you use safe and established practices in working with electrical devices. Poorly wired devices may cause a fire, explosion or electrical shock. Ensure that grounding connections are properly made. Take care that sealing devices and compounds are in place. Ensure that you do not pinch wires when replacing covers. Follow OSHA Lockout/Tagout requirements. Station employees and service contractors need to understand and comply with this program completely to ensure safety while the equipment is down.

Hazardous Materials

Some materials present inside electronic enclosures may present a health hazard if not handled correctly. Ensure that you clean hands after handling equipment. Do not place any equipment in the mouth

WARNING

In the event of inclement weather, including snow, ice, or flooding that makes driving conditions dangerous, please avoid servicing units. Always use available door stops to secure upper doors against unwanted/unexpected movement, especially during high winds. If necessary, reschedule service to avoid damage to the equipment. Weather may change unexpectedly; be aware of local weather conditions. During service, if conditions develop making service unsafe, close the unit(s) and proceed to a safe location.

WARNING

The pump/dispenser contains a chemical known to the State of California to cause cancer.

WARNING

The pump/dispenser contains a chemical known to the State of California to cause birth defects or other reproductive harm.

Gilbarco Veeder-Root encourages the recycling of our products. Some products contain electronics, batteries, or other materials that may require special management practices depending on your location. Please refer to your local, state, or country regulations for these requirements.

In an Emergency

Inform Emergency Personnel

Compile the following information and inform emergency personnel:

- Location of accident (for example, address, front/back of building, and so on)
- Nature of accident (for example, possible heart attack, run over by car, burns, and so on)
- Age of victim (for example, baby, teenager, middle-age, elderly)
- Whether or not victim has received first aid (for example, stopped bleeding by pressure, and so on)
- Whether or not a victim has vomited (for example, if swallowed or inhaled something, and so on)

WARNING

Gasoline/DEF ingested may cause unconsciousness and burns to internal organs. Do not induce vomiting. Keep airway open.
Oxygen may be needed at scene. Seek medical advice immediately.

WARNING

DEF generates ammonia gas at higher temperatures. When opening enclosed panels, allow the unit to air out to avoid breathing vapors. If respiratory difficulties develop, move victim away from source of exposure and into fresh air. If symptoms persist, seek medical attention.

WARNING

Gasoline inhaled may cause unconsciousness and burns to ls, mouth and lungs.
Keep airway open.
Seek medical advice immediately.

WARNING

Gasoline/DEF spilled in eyes may cause burns to eye tissue.
Irrigate eyes with water for approximately 15 minutes.Seek medical advice immediately.

WARNING

Gasoline/DEF spilled on skin may cause burns.
Wash area thoroughly with clear water.
Seek medical advice immediately.

WARNING

DEF is mildly corrosive. Avoid cont with eyes, skin, and clothing. Ensure that eyewash stations and safety showers are close to the work location. Seek medical advice/recommended treatment if DEF spills into eyes.

IMPORTANT: Oxygen may be needed at scene if gasoline has been ingested or inhaled. Seek medical advice immediately.

Lockout/Tagout

Lockout/Tagout covers servicing and maintenance of machines and equipment in which the unexpected energization or start-up of the machine(s) or equipment or release of stored energy could cause injury to employees or personnel. Lockout/Tagout applies to all mechanical, hydraulic, chemical, or other energy, but does not cover electrical hazards. Subpart S of 29 CFR Part 1910 - Electrical Hazards, 29 CFR Part 1910.333 contains specific Lockout/Tagout provision for electrical hazards.

Before You Begin

CAUTION

A properly grounded ESD wrist strap must be worn while servicing any electronic devices or components. Failure to use electrostatic precautions may damage electronic components and void warranty.

To prepare the site and unit for the upgrade, proceed as follows:

1. Before you begin, read and understand all safety information found in *MDE-3804 Encore and Eclipse Start-up/Service Manual*.

2. Inform the manager that power will be removed and remove all the power supplied to the unit at the breaker located in the building. Follow OSHA lockout/tagout procedures.

3. Block off the unit from customers.

⚠ WARNING

Failure to turn off the unit during kit installation may cause injury or bodily harm from electrical shock. Ensure that all power to the unit is switched off before opening the door to the unit and during kit installation.

Preventing ESD

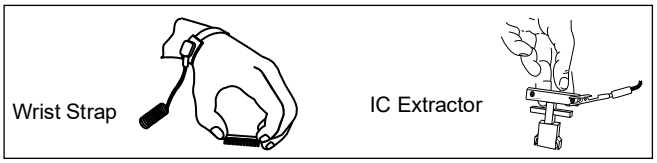

Printed Circuit Assemblies (PCAs) and ICs are sensitive to electrostatic discharge caused by static electricity. ESD can damage electronic parts. When removing PCAs or handling sensitive parts:

- Touch an unpainted metal surface to discharge any static electricity buildup.
- Use a wrist strap connected to a grounded metal frame or chassis.
- Place removed PCAs or ICs on a grounded anti-static mat.
- Use an IC extractor tool to remove ICs.
- Place PCAs that you plan to return for credit or repair in anti-static bags.

Replacing Existing Encore S Door with Encore E-CIM Door

To replace the existing Encore S door with the new door, proceed as follows:

1. Remove the lower panel and set it aside.
2. Open the main door.
3. Remove each of the grade select buttons by pulling them from their base and removing the two screws that secure the base. Set aside for reuse on the new door.
4. Remove the speaker connections by removing the wire nuts that hold the speaker connections inside the electronics cabinet.
5. Remove the card reader.
   Note: Retain the parts for reuse.
6. Remove the PPU display by removing the three screws that secure it. These screws cannot be reused when installing the E-CIM. Leave the PPU connections in place.
   Note: The printer door needs to be opened to remove the PPU display.

Figure 1: Removing PPU Display

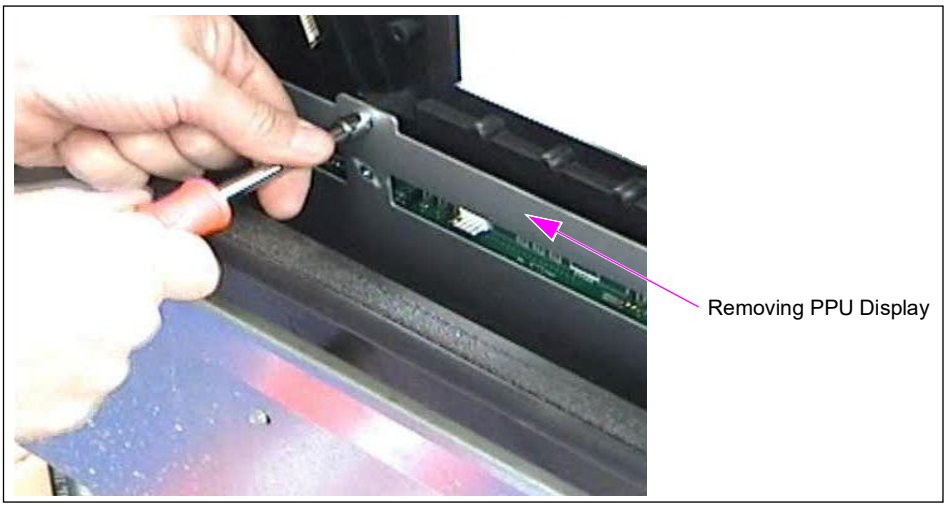

7. Remove the boot switch(es).
8. Disconnect the Local Operating Network (LON) connector (J2109) from the door node.
9. Remove the totalizers by removing the two screws that secure them.

10 Remove the door node by removing the four screws that secure it and set the door node aside.
Note: Ensure that the PPU display and main display are not scratched while setting aside.

Figure 2: Removing Door Node

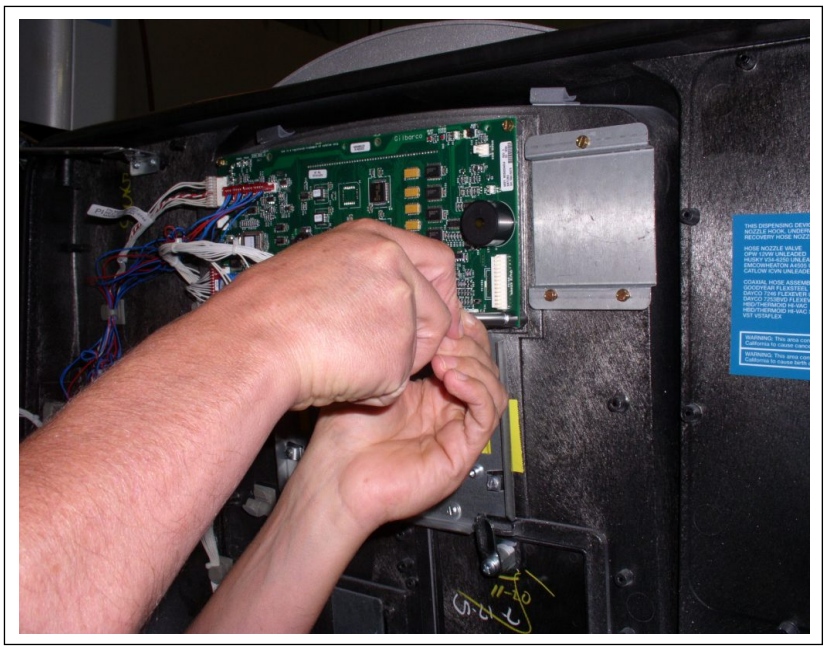

11 Remove the prop rod.

Figure 3: Removing Prop Rod

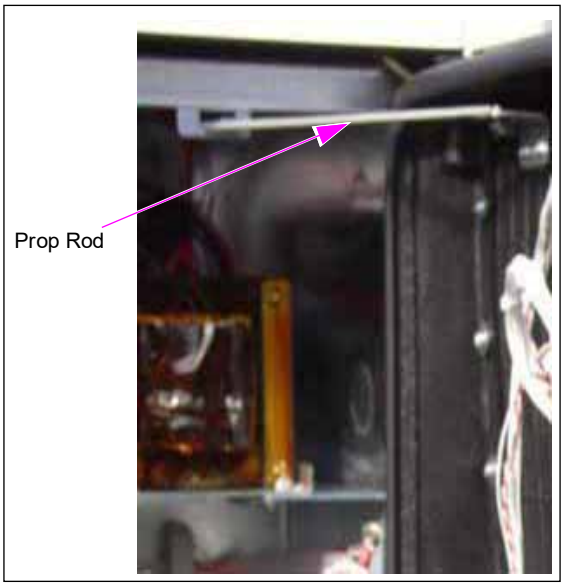

Note: Before removing the door, ensure that all cables routed to the door are disconnected. If the unit has additional features such as a scanner, cash acceptor, TRIND, or GCM, refer to *"Reinstalling Scanner, Cash Acceptor, TRIND, or GCM" on page 25.*

12 Remove other peripheral components if they are present: EPP keypad, call interface PCA, card reader, customer display (monochrome or 10.4-inch), TRIND, and GCM. Carefully put these aside, keep up with cabling connections where possible, and retain the screws.

13 Remove the existing door from the unit:

a After opening both doors, the top sheathing should slide over enough to remove the door upper hinge pin. If not, you may have to remove the inner sheathing, so that you can slide the top cover and gain access to the pin.

b Remove the door upper hinge pin. Ensure that you hold the door steady with one hand while removing the pin.

14 Install the new door on the unit by reversing the previous step. Insert the lower pin of the door in the lower hinge, and then place the pin in the upper hinge (see Figure 4).

Figure 4: Installing New Door

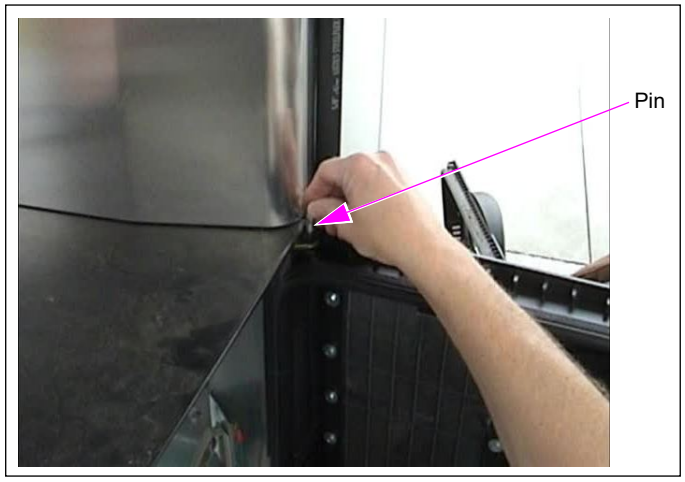

Installing PPU Shield Assembly

The PPU Shield Assembly (M12962A001) is intended to prevent water (if water falls down from the top of the cabinet while servicing) from getting on the PPU board.

To install the PPU shield assembly, proceed as follows:

1. Remove the three screws holding the PPU plate.

2. Put the PPU shield over the PPU plate with the center section going through the slot in the shield (see Figure 5).
   Note: Cables can be left connected to the PPU board. Ensure that cables are not placed in between the PPU panel, shield, or bezel. For more information, refer to "Managing Cables in PPU Cavity" on page 16.

Figure 5: Installing PPU Shield

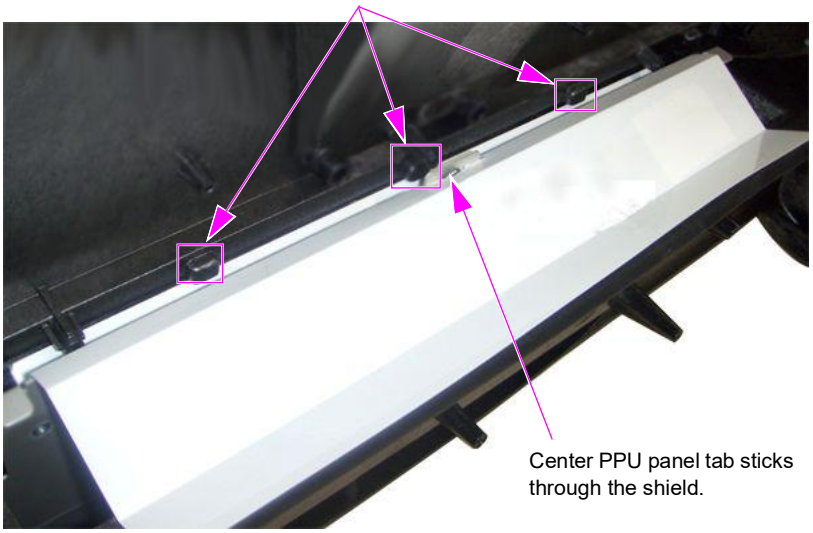

Note: The unit door shown does not have a printer or a card reader.

3 Secure the PPU shield to the PPU plate at the center position first by using the M00959B002 Washers provided in the kit and the three screws removed in step 1 on page 11 (see Figure 6).

Figure 6: Securing PPU Shield

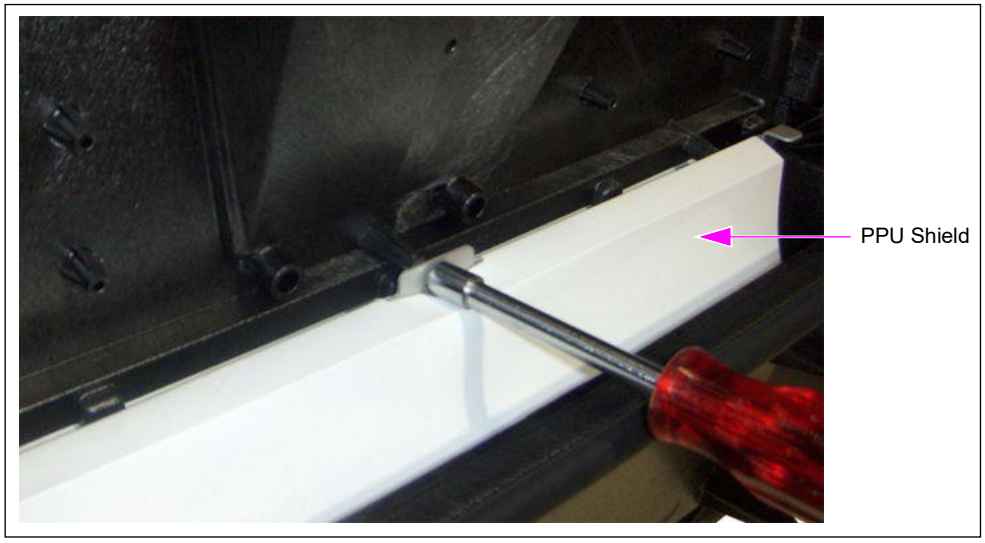

4 Lift the PPU shield and mount the screw (right side) as shown in Figure 7. This secures the PPU panel and shield on that side.

Figure 7: Securing Right Side of PPU Shield

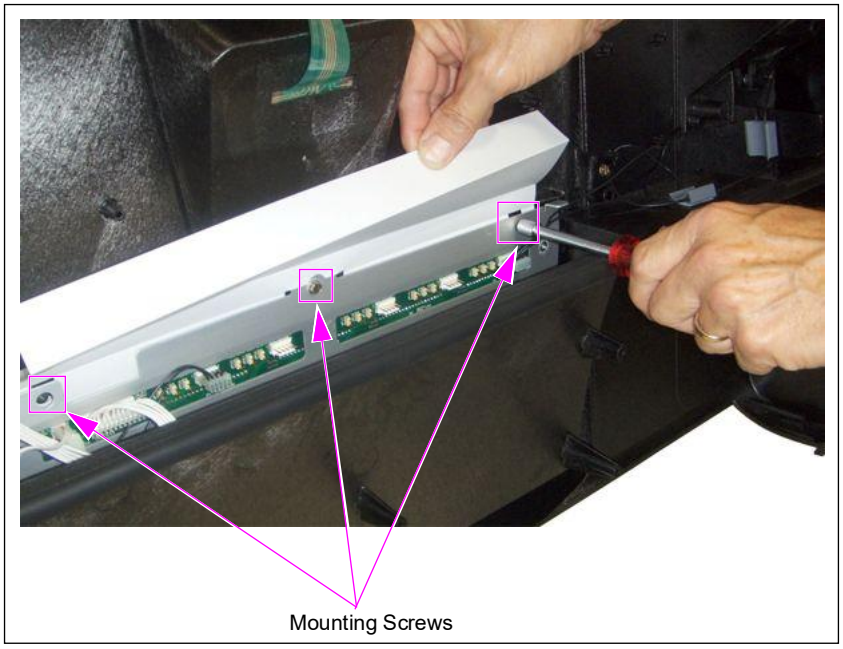

5 Repeat step 4 on page 12 for the left side of the shield (see Figure 8).
Note: Ensure that the shield is returned to its original location once the screws are secure on each end of the PPU assembly (see Figure 9).

Figure 8: Securing Left Side of PPU Shield

Installing the PPU shield is now complete (see Figure 9).

Figure 9: PPU Shield Installed

6 Reinstall the PPU board with the shield assembly, door node, speaker, and totalizers on the new door.
Note: The PPU board must be reinstalled before the card reader on the E-CIM door.

7 Reconnect the speaker wires.

8 Inspect the bosses on the door before installing the card reader, keypad, and display. Use M14757B001 Screws if the door has metal bosses (see Figure 10) and Q11677-24 Screws if the door has non-metal bosses for installation of these components.

Figure 10: Metal and Non-metal Bosses

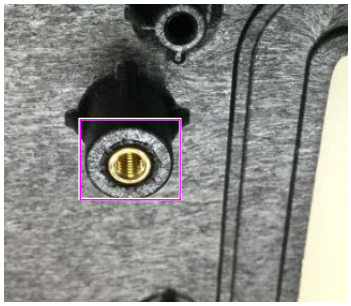

(i)

Metal Boss

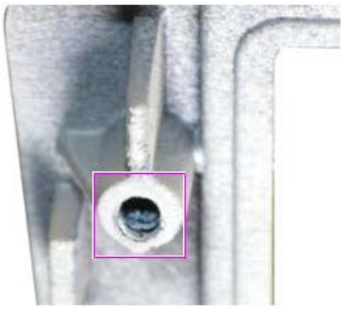

(ii)

Non-metal Boss

(iii)

M14757B001 Screw

(iv)

Q11677-26 Screw

9 Install the new card reader bracket and gasket, and the card reader using the screws as determined in step 8 on page 14.

Note: Ensure that the card reader bracket is oriented correctly. Use the Card Reader Vertical Bracket (M07574B001) for the dual-head card reader and the HCR 2 Bracket (M13674B001) for the HCR.

Figure 11: Installed Card Reader Gasket and Bracket (E-CIM Unit Shown)

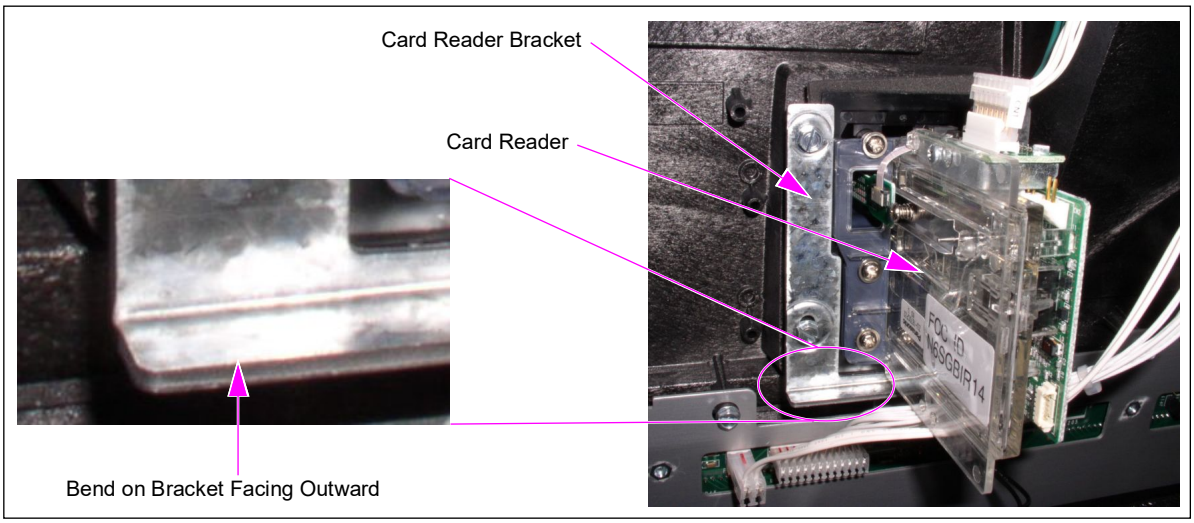

10 Reinstall the keypad if an EPP keypad was on the Encore S bezel using the EPP Keypad Gasket (M13209B002), included in the kit, and the screws as determined in step 8 on page 14.

11 Reinstall call interface PCA, if it was on the Encore S bezel using the screws removed in step12 on page 10.

12 Install the customer display (either monochrome or 10.4-inch color) using the screws as determined in step 8 on page 14.

13 Repeat steps 4 to 9 provided on page 8 on the other side of the unit and reinstall the inner sheathing (if it has been removed in step 12 on page 10).

Managing Cables in PPU Cavity

The following are guidelines for managing cables in the PPU cavity:

- Move any unconnected cables that have ends stored in the PPU cavity onto the main door and hold in place by twist cable-tie clamps. The twist cable-tie clamps are already installed on the door.
- Units that have an ADA keypad: Position the PPU shield back portion and tuck cables in so that the metal guide keeps its original shape. Ensure to tuck in the shield so that the trough is ineffective (see Figure 12).

Figure 12: Cables in PPU Cavity

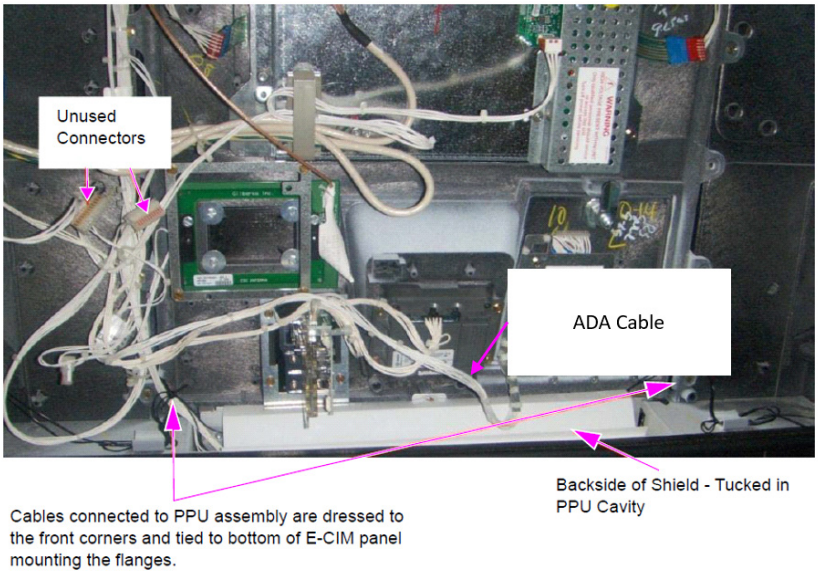

IMPORTANT INFORMATION
Cable routing is critical. It is very important to route and dress the cables properly. Exercise care in routing the cables, keeping in mind that the door(s) opens and closes for service. The cables must be dressed neatly. Ensure that there is no interference after the cables are connected and routed.

Also, for any future service in the PPU area, ensure to return the shield to its original installed location to control any potential future water damage.

Removing Existing UL Sheet Metal Bucket

Note: Leave the Underwriters Laboratories (UL) panel that contains serial number information in the unit.

To remove the existing UL sheet metal bucket, proceed as follows:

1 Remove the four screws that secure the existing UL sheet metal bucket. Set the screws aside for reuse.

Figure 13: Removing UL Sheet Metal Bucket

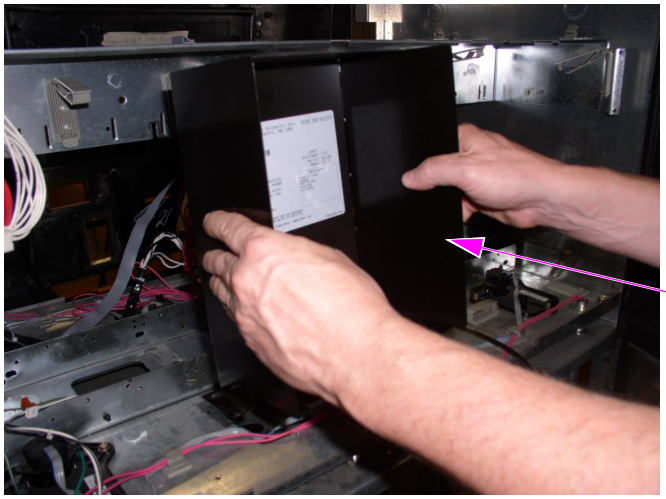

2 Bend and remove the side panels of the bucket, while you retain the panel (facing you) that contains the serial number and UL listing information.

Figure 14: Removing Side Panels of UL Sheet Metal Bucket

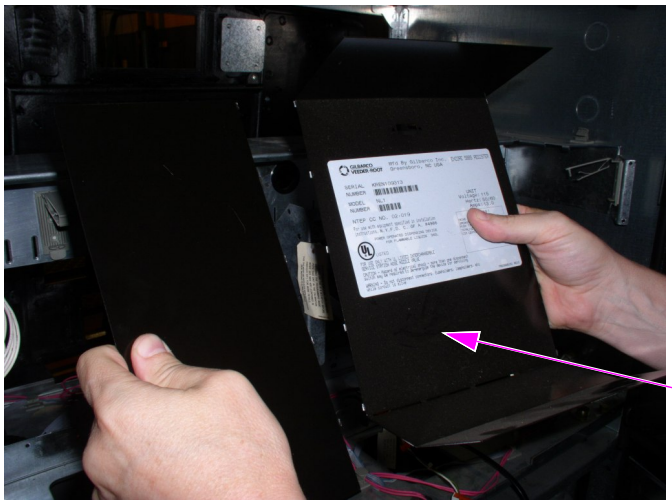

3 Use double-sided tape to adhere the panel to an available spot inside the electronics cabinet.

Figure 15: Adhering Panel to Electronics Cabinet

Installing New Printer in Electronics Cabinet (6-inch for E-CIM Door)

To install a new printer on the door, proceed as follows:

1. Open the printer door.
2. Assemble the Printer Bracket Assembly (M17414A001) using 3X Screws.
3. Locate the Printer Control Module on the bracket and engage it using quick release pins by pushing until it is locked as shown in Figure 16 (ii) and Figure 16 (iii).
   Note: Ensure that you stay clear of the existing cables. Do not pinch the cables between the printer mounting bracket and the electronics cabinet.

Figure 16: Installing New Printer

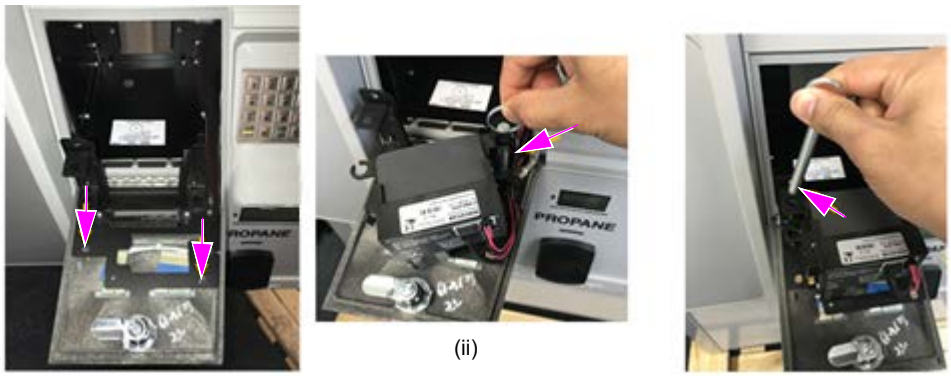

4. Open the Bezel Door. Mount the Paper Holder Bracket by engaging the three slots at the bottom to the Hex Spacer. Then mount the screw as shown in Figure 17.

Figure 17: Mounting Paper Holder Bracket

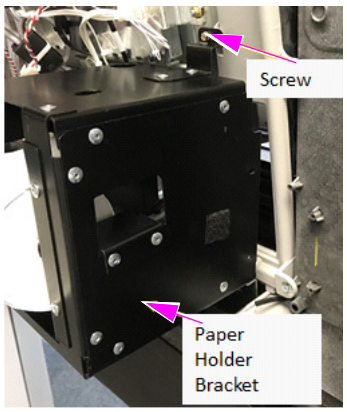

5 Remove the existing printer cable.

Figure 18: Printer Cables and Orientation of 24V Connector Cable

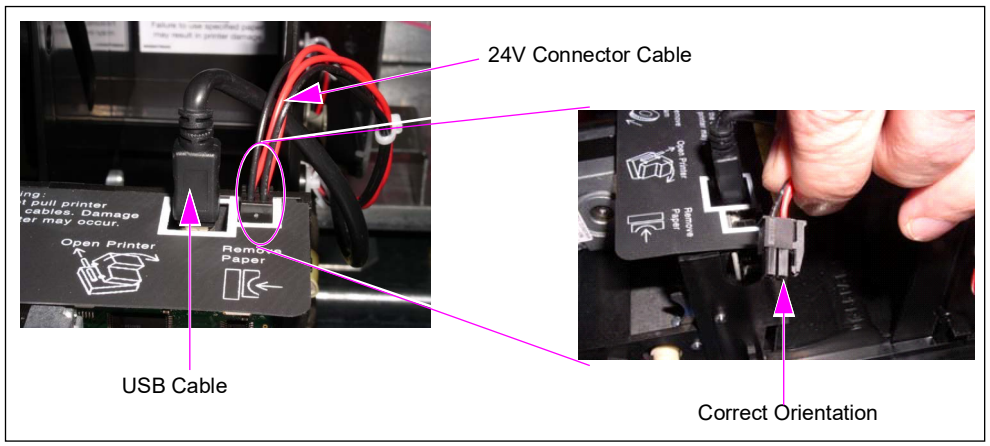

6 Connect the 24V connector cable to P4 and P5 on the Deutsche Industrie Norm (DIN) rail power supply board, using the existing Encore S 24V connector/DIN rail power supply.

Figure 19: Connecting 24V Connector Cable

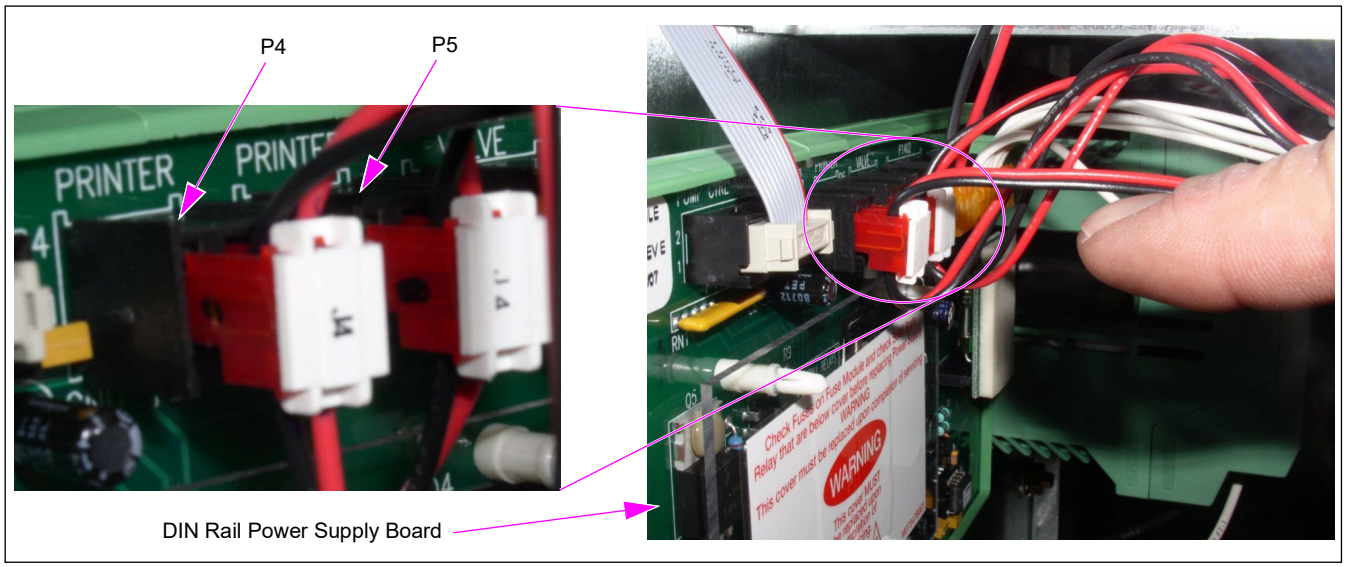

7 Connect the USB cable from the printer to the CRIND Control Node (CCN) PCA. Connect the side 1 cable plug to P3120 (bottom) and the side 2 cable plug to P3122 (top) as shown in the Figure 20.

Figure 20: USB Printer Cable Connection to CCN

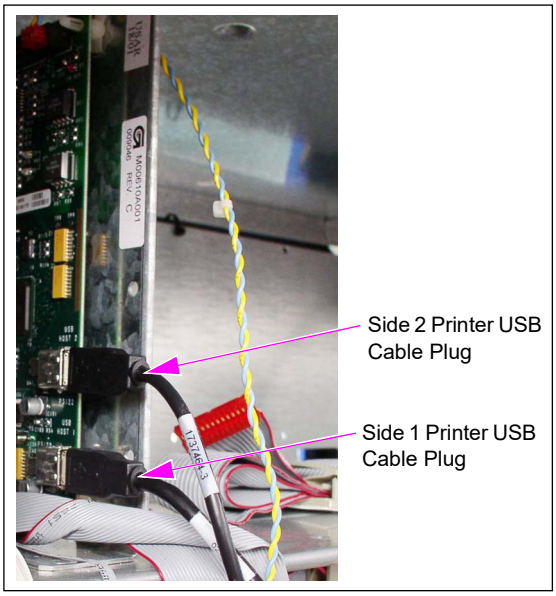

Attaching Paper Loading Label

To attach the paper loading label, proceed as follows:

1 Open the Printer Door and place the Printer Paper Loading/Replacement Label (M17677B001) on the Paper Holder where it will be visible when paper is loaded.

Figure 21: Installing Paper Loading Label

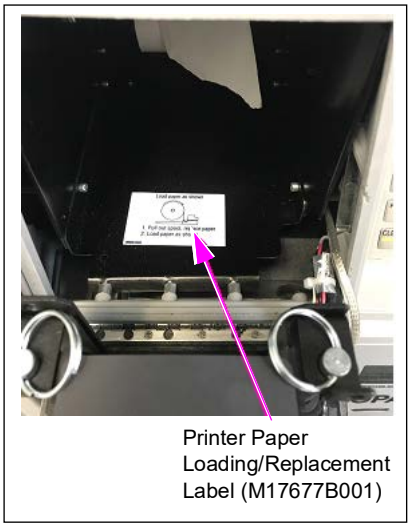

Adding Exterior Components

To add the exterior components to the unit, proceed as follows:

Figure 22: Exterior Component Locations

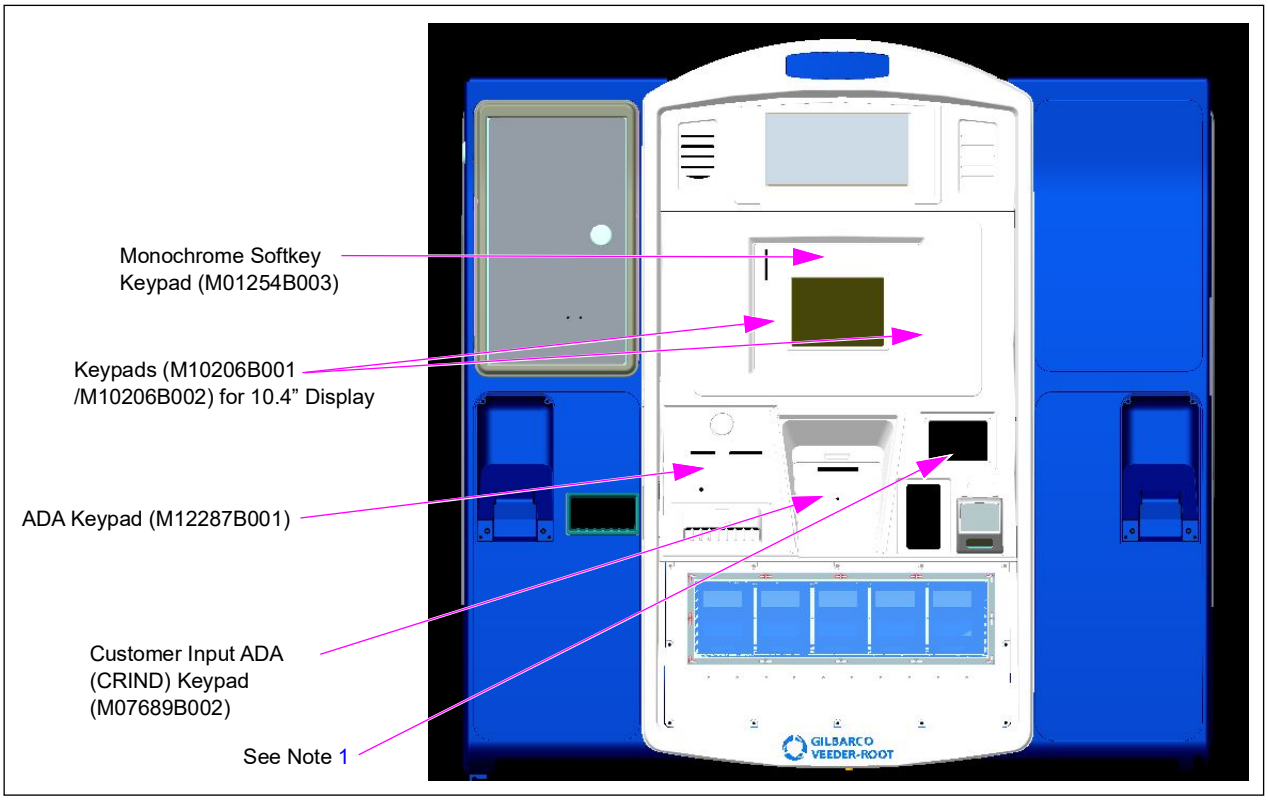

Notes: 1) Leave the factory installed plug in place unless the barcode scanner, or TRIND features exist. If either of these are present, remove the plug and use the TRIND Lens Gasket (M07715B002), TRIND Lens (M07698B001), and four Thread Forming M3 X 12 Screws (M00419B313) to make a clear window.

2) Ensure that while the plug is applied to the inside of the door, the gasket, lens, and screws are applied to the front of the door.

Adding ADA Components to Back of Printer Door

The ADA Keypad (M12287B001) is applied to the front of the printer door. The two connector tails are threaded through the back of the printer door.

Monochrome Display

To add ADA components to the back of the printer door for units with monochrome display, proceed as follows:

1. Connect the ADA Cable Retainer connectors to the 7-button and EPP ADA Cable (M07957A008) connectors (for units with a 10.4-inch display, the M07957A015 Cable is used).

2. Place the Printer Adapter Bracket and fasten using Q11677-24 Screws (3X).

3. Route the cable clockwise to the top of the door. Use existing twist-lock cable-ties on the door to make the cable routing neat.

Figure 23: ADA Inside Printer Door Components

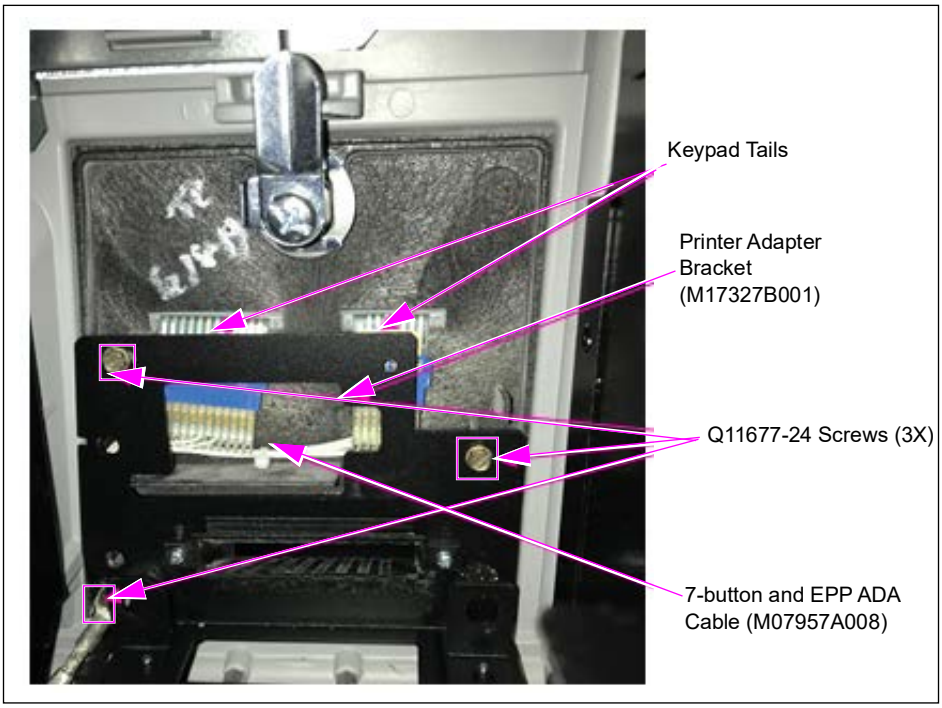

4 Connect the cable to the door node connectors P2111 (Push-to-start/Push-to-stop) and P2106 (soft keypad). Also connect the cable to the monochrome keypad connector.

Figure 24: Connecting ADA Cable to Door Node and Monochrome Keypad

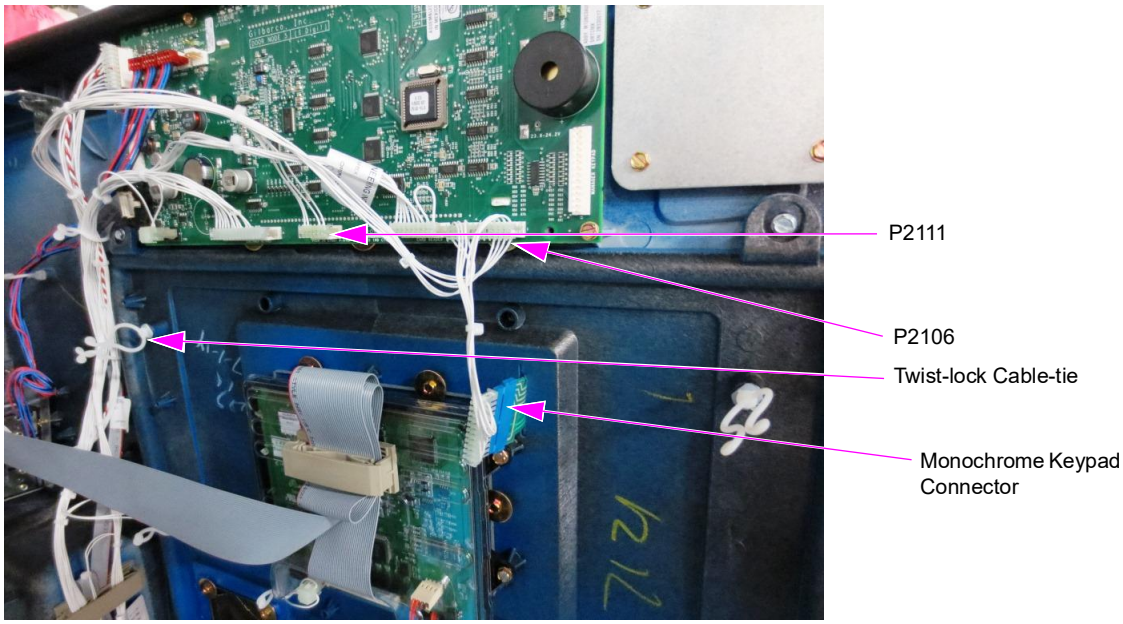

Reinstalling Scanner, Cash Acceptor, TRIND, or GCM

Scanner

To reinstall the scanner, proceed as follows:

1 Remove the scanner engine from the Encore S printer door.
Note: The printer must be removed.

Figure 25: Removing Scanner Engine From S Door

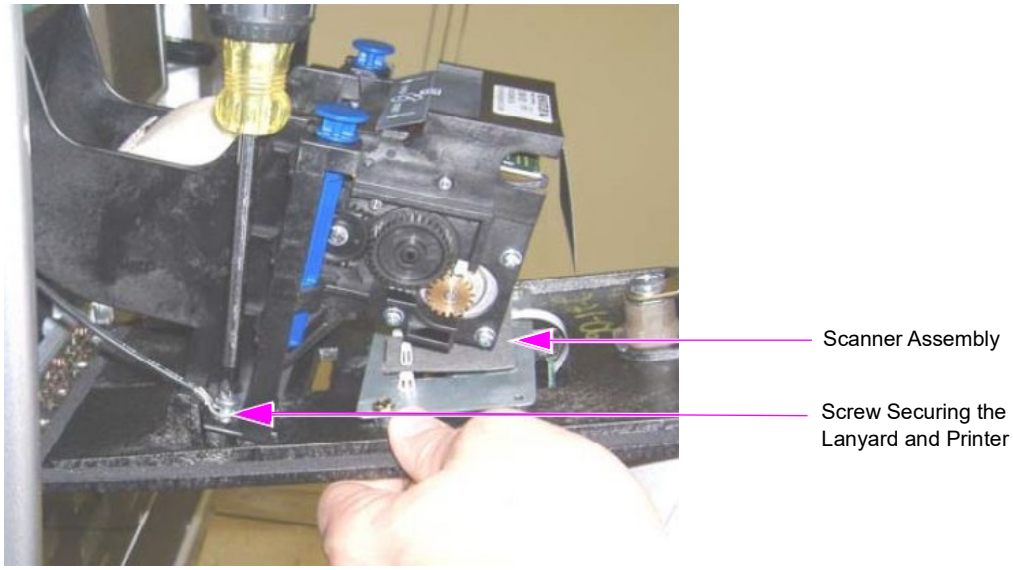

2 Disconnect cabling from scanner engine and cables from the S door.
Note: ***If the unit does not have TRIND or GCM, ensure to use the new cable and light board (M07423A001 Cable and M08285 Light Board), provided in the kit. If the unit currently has TRIND or GCM, the cable and light board in the kit will not be used.***

3 Remove scanner engine and set aside for later re-installation.

4 Assemble the scanner as shown in Figure 26 on page 26. Then install the scanner as shown in Figure 27 on page 27. Place the Graphics Material Label (M02994B202) on the inside of the bezel near the scanner.

5 Install only one of the following at the location shown in Figure 27 on page 27:
- TRIND if it exists.
- GCM if it exists.
- If neither TRIND nor GCM exists but a barcode scanner does, install the Contactless Antenna Assembly (M08285A003) using two Q11677-26 Screws.
- If either TRIND or GCM is present, keep the existing cable and connections.
  - To mount the TRIND, use the two TRIND E-CIM Mounts (M07908B001), three Q11677-24 Screws, and two Q11677-26 Screws (see Figure 27 on page 27).
  - To mount the GCM, install the new Contactless Antenna Assembly (M08285A001) using two Q11677-26 Screws.

If the Contactless Antenna Assembly is installed (i.e., neither TRIND nor GCM exists), use the Barcode Scanner Cable (M06633A001) to connect P1533 on M01369A001 (light board on M08285A001) to J1533 on the M06633A001 Cable. Then connect J1513 on the cable to P1513 on the existing LON-Serial-Node PCA (M00122A002).

Figure 26: Scanner Assembly

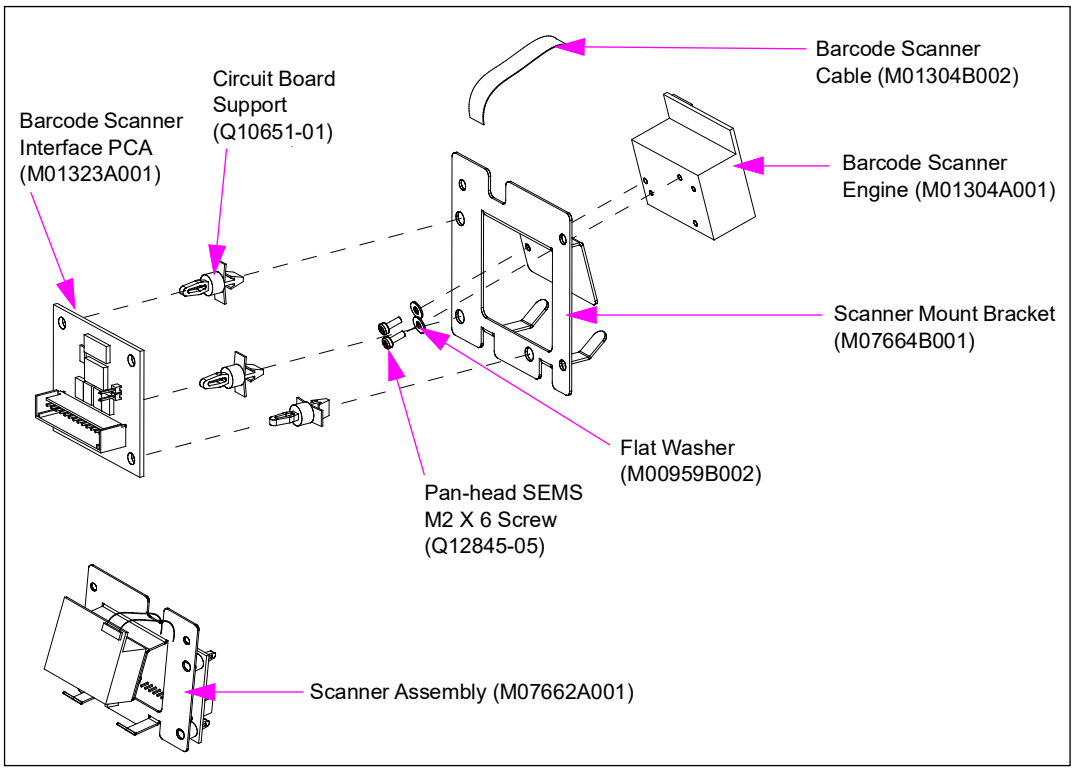

Figure 27: TRIND Assembled to TRIND Mounts

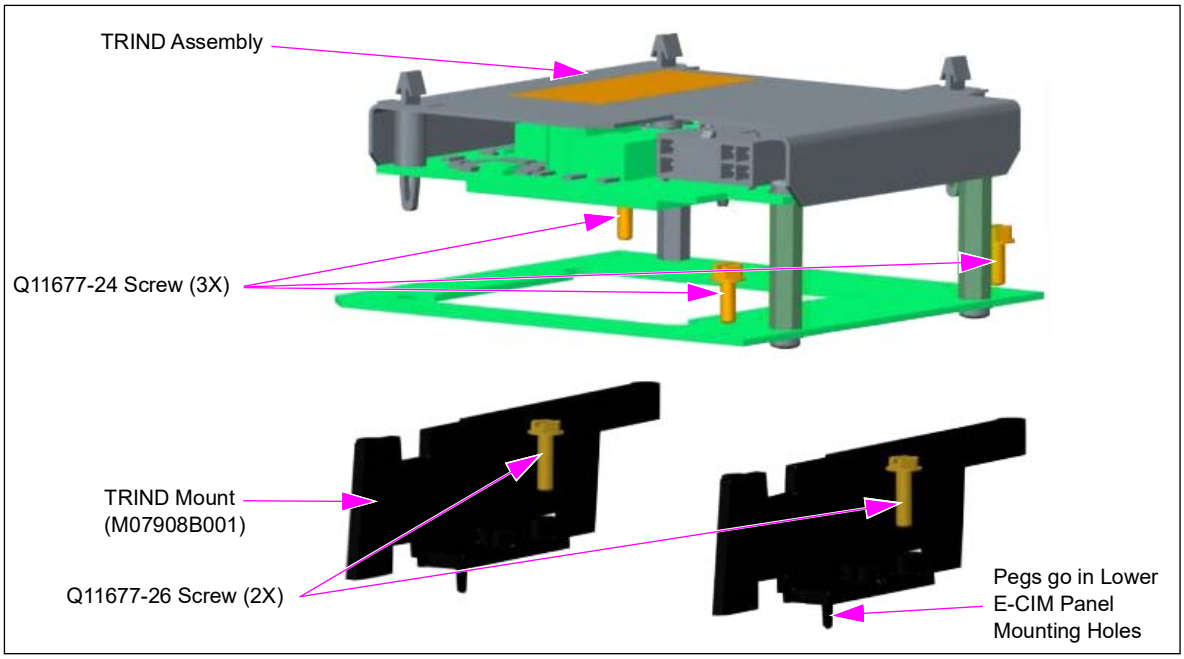

6 Then assemble to E-CIM panel as shown in Figure 28.

Figure 28: Scanner, TRIND, GCM, or Light Board Assembly Installed

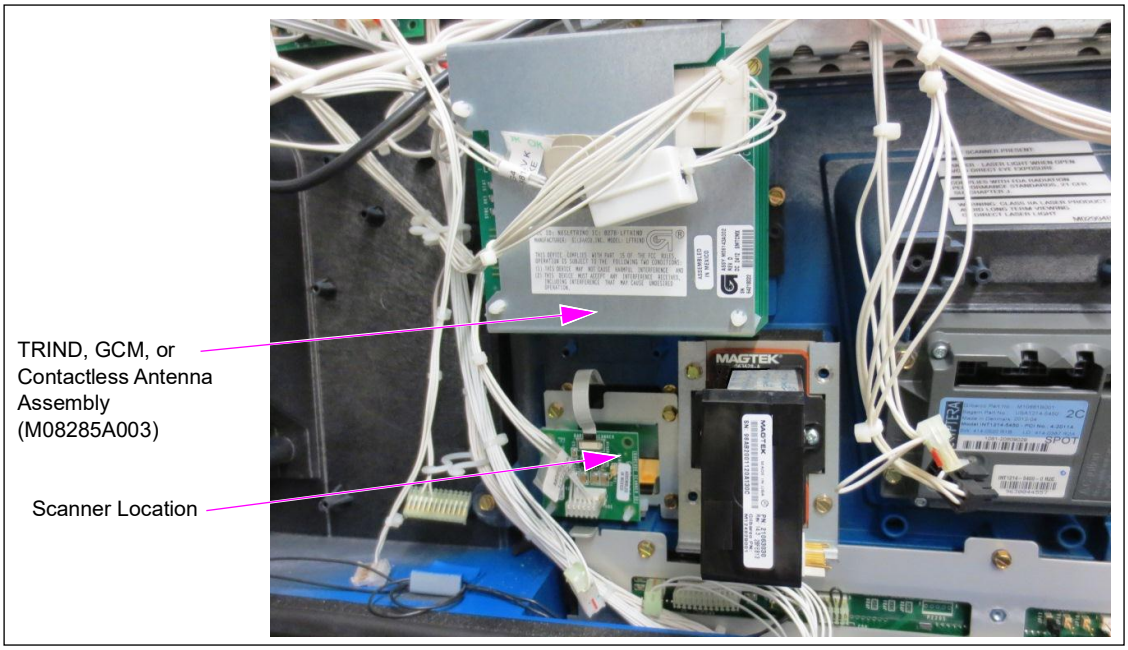

Cash Acceptor

For units that have cash acceptors, the geometry and mounting scheme is so different that a new cash acceptor has to be installed. The new Cash Acceptor Assembly (M08074A002) is installed using a Note Acceptor Bracket (M07923A001), two Hexagonal Nuts (Q12885-06), and four Tamperproof Screws (M07335B007) to mount the cash acceptor to unit frame (see Figure 29).

Figure 29: Note Acceptor Bracket (M07923A001)

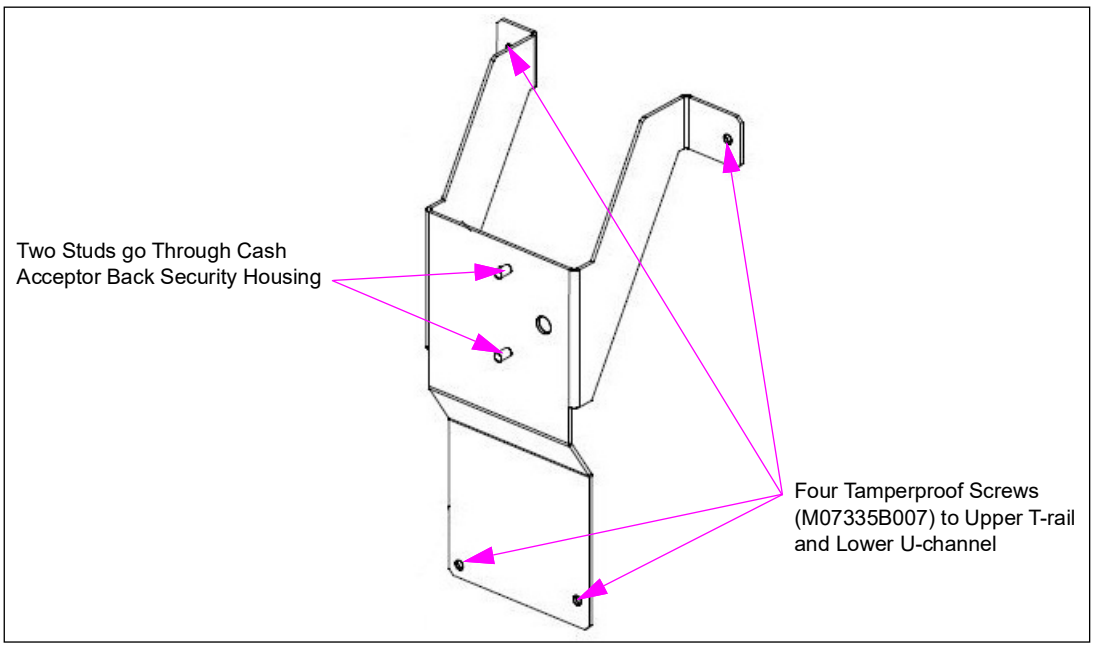

Mount the top of the note acceptor bracket to the T-rail using two tamperproof screws (see Figure 30). This should locate the bottom two bracket holes on the U-channel. Install these bottom two screws.

Figure 30: Mounting Cash Acceptor to Bracket

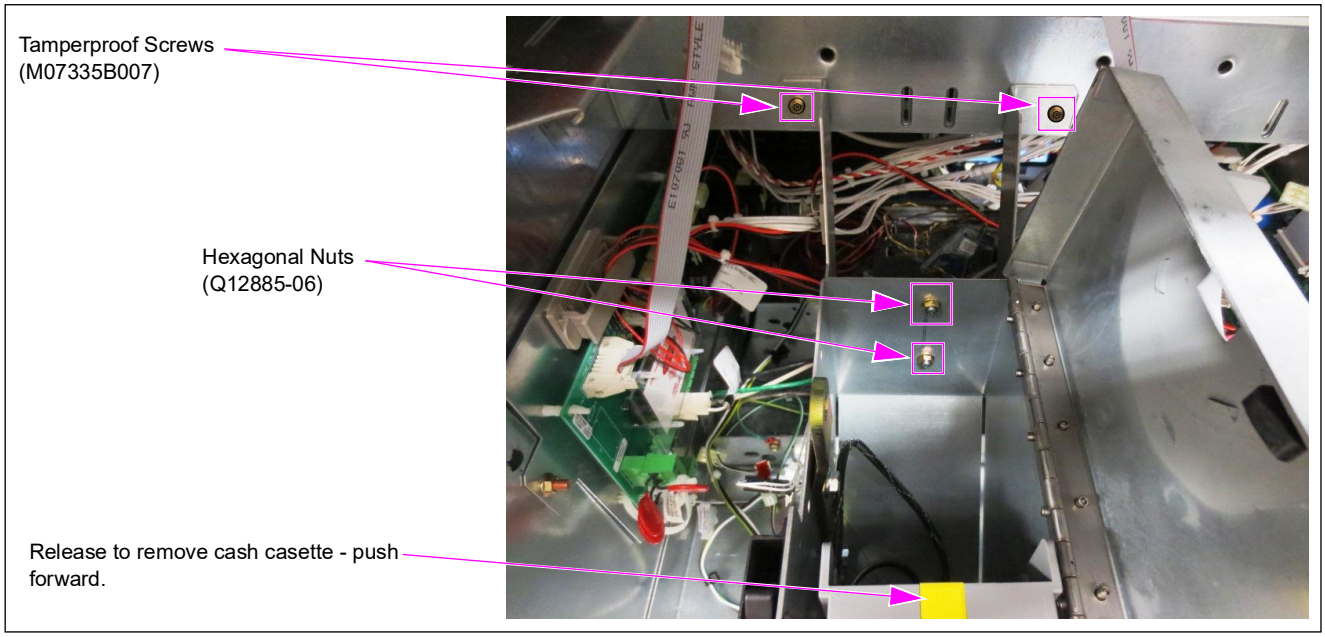

To mount the cash acceptor assembly to the mounting bracket, proceed as follows:

1. Open the top of the cash acceptor assembly (see Figure 30).
2. Push the release forward and remove the cash cassette (plastic box bill holder).
3. Place the cash acceptor enclosure on the bracket (two holes at the back go over the bracket studs).
4. Place the two metric hexagonal nuts on the studs and tighten. Reinstall the cash cassette. The bottom right front leg of the cash acceptor needs to be fastened to the floor of the unit electrical enclosure by using the left front sliding printer leg screw to fasten both the right cash acceptor leg and the left sliding printer leg.
5. Restore the electrical connections to complete installing the new cash acceptor.

Connecting Cables

IMPORTANT INFORMATION
Cable routing is critical. It is very important to route and dress the cables properly. Exercise care in routing the cables, keeping in mind that the door(s) opens and closes for service. The cables must be dressed neatly. Ensure that there is no interference after the cables are connected and routed.

To connect the cables, proceed as follows:

1. Dress and route the shelf and door cabling in cable clamps. Ensure that adequate reach is permitted to prevent cable pulling and pinching when the main doors are closed.
2. For unmodified parts that were moved from the S bezel to the E-CIM bezel, connect the wiring as they were connected before moving.

Completing Installation

To complete the installation, proceed as follows:

1. Inspect all the connections again and verify that all of them are connected, and all cables are seated on the respective boards.
2. Restore power to the unit. A red Light Emitting Diode (LED) should blink twice per second on the USB printer, indicating that the printer is operational, but out of paper.
3. Load paper in the printer, based on the instructions on the printer and close the printer door.
4. Perform a printer test to verify if the printer is operational. The red LED should blink once every second, indicating that the paper is loaded and the communication is good.
   Note: If you have the M04326A001 Door Node PCA, you do not need to install the Resistor Terminator (M00605A001). If you have an older door node, ensure that the resistor terminator is plugged in on an unused LON header.
5. Close the printer door. The dispenser is now ready for use.

Appendix: Wiring Diagrams

Figure 31, Figure 32 on page 32, and Figure 33 on page 33 are the wiring diagrams of base door electronics, monochrome CRIND option, printer (6-inch), monochrome options, and barcode scanner:

Figure 31: Wiring - Base Door Electronics

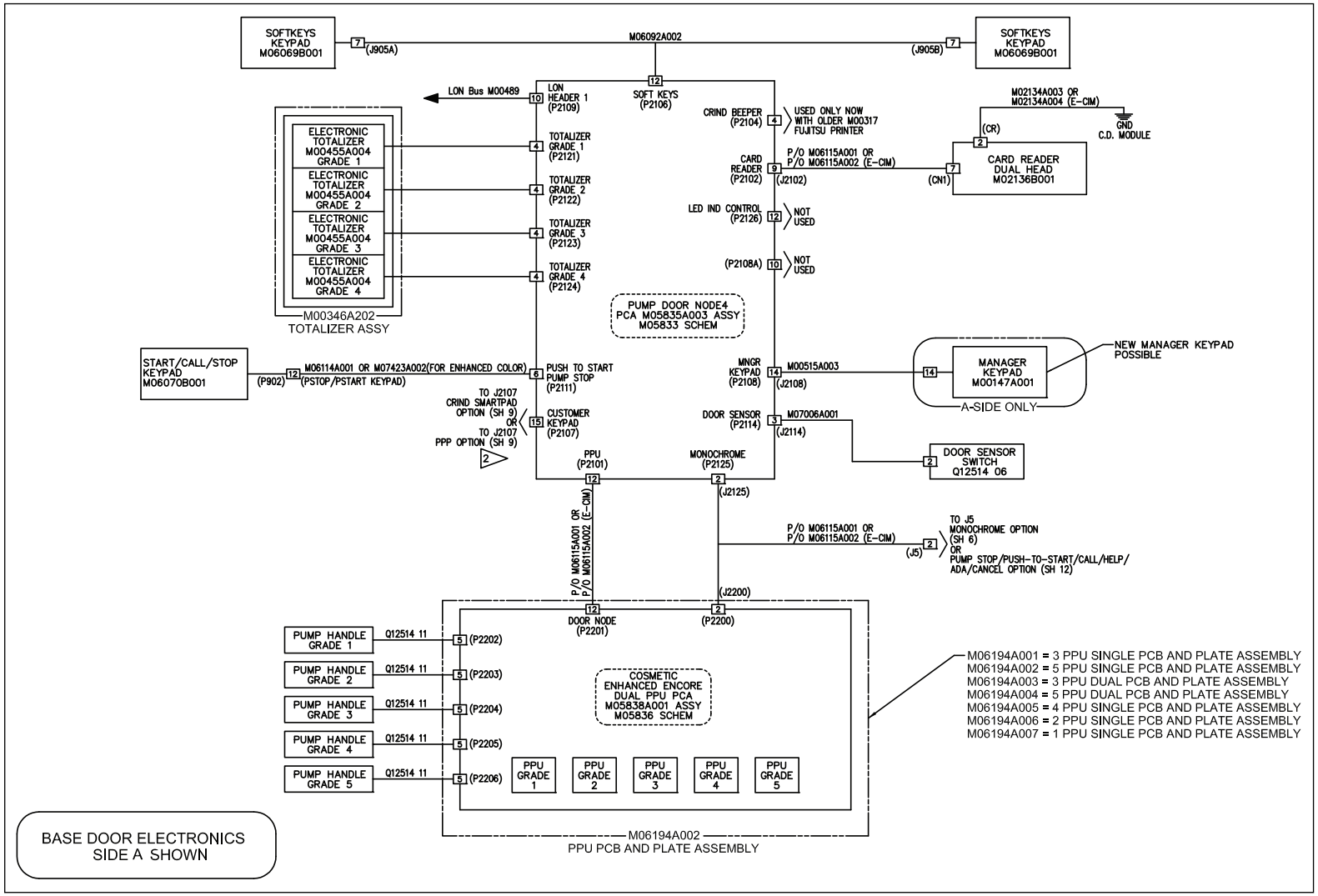

Figure 32: Wiring - Monochrome CRIND

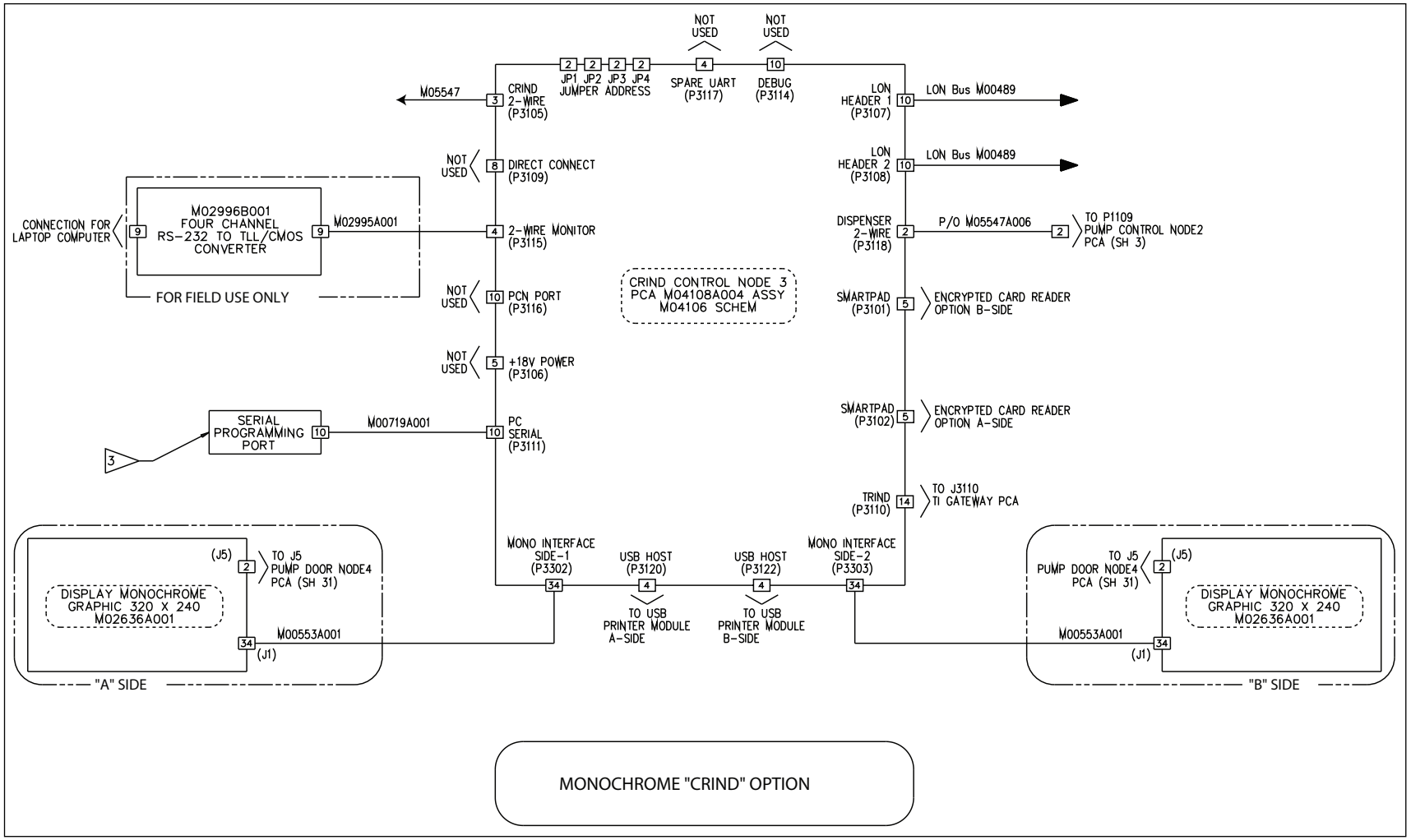

Figure 33: Wiring - Printer (6-inch)

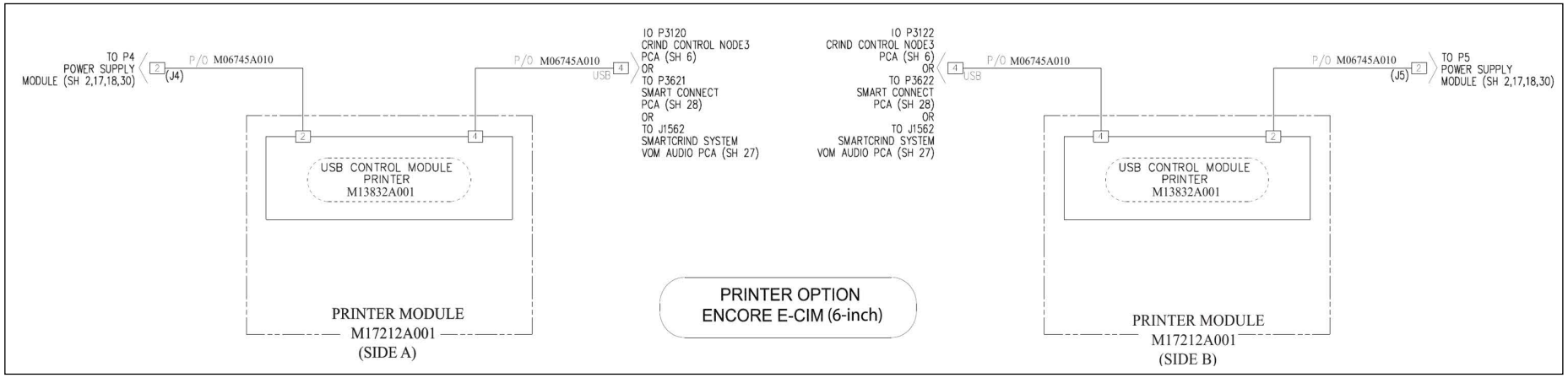

Figure 34: Monochrome Options

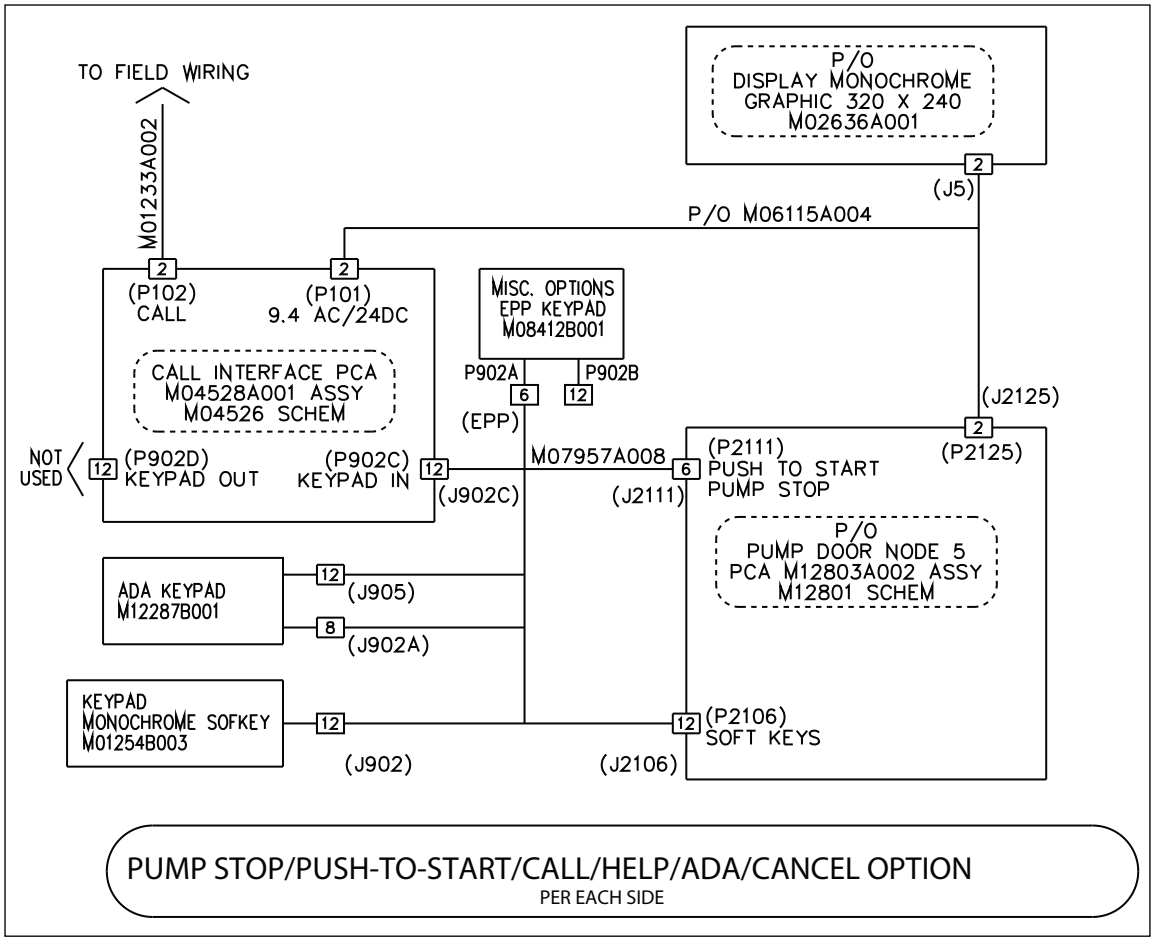

Figure 35: Barcode Scanner

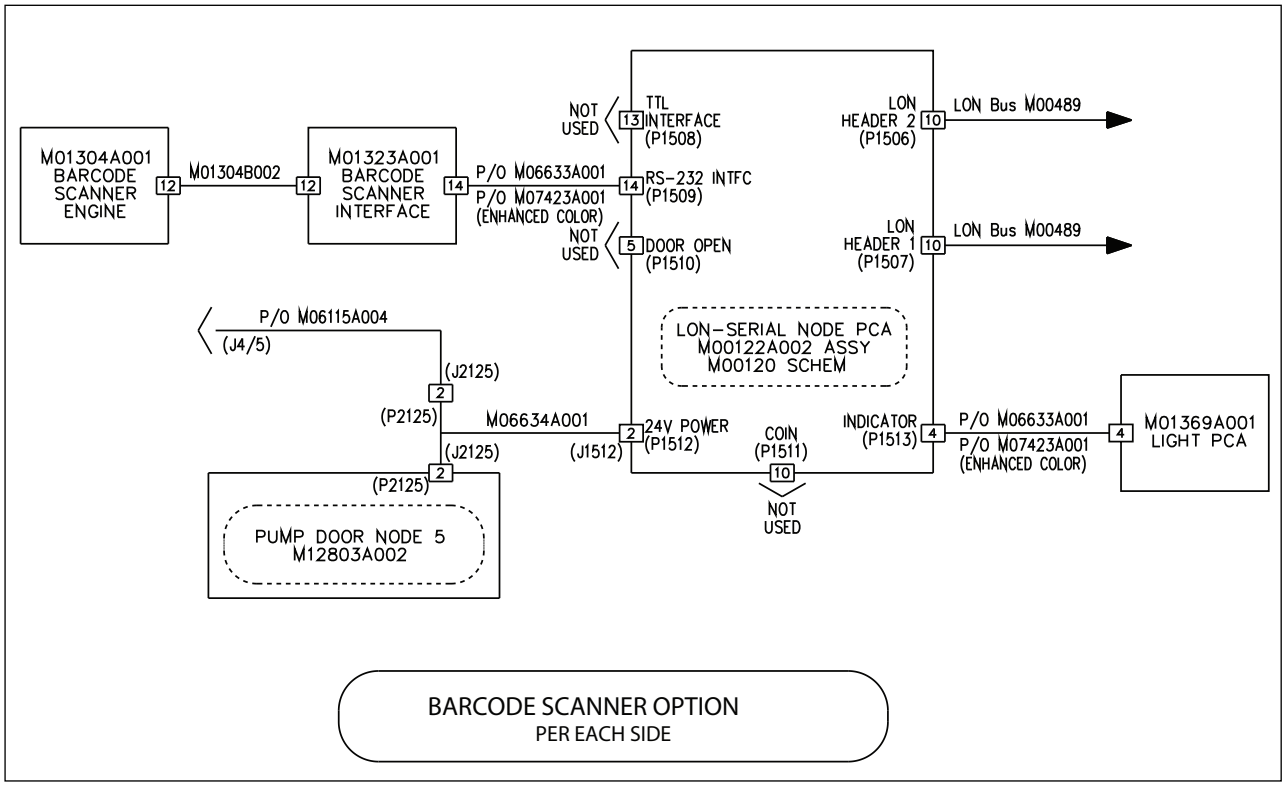

7300 West Friendly Avenue · Post Office Box 22087
Greensboro, North Carolina 27410
Phone (336) 547-5000 · http://www.gilbarco.com · Printed in the U.S.A.
MDE-5161F Encore® S Bezel to E-CIM™ Bezel Conversion Kit (M14061K0XX) Instructions for Encore S · March 2023