MDE-4814D

Fuel Truck Controller

INSTALLATION MANUAL

This document is based on Orpak's Truck Controller Unit (OrTC) installation manual P/N 817438028.

SAFETY CONSIDERATIONS

Read all warning notes and instructions carefully. They are included to help you in installing the Product safely in the highly flammable environment of the fuel station. Disregarding these warning notes and instructions could result in serious injury or property damage. It is the installer's responsibility to install, operate and maintain the equipment according to the instructions given in this manual, and to conform to all applicable codes, regulations and safety measures. Failure to do so could void all warranties associated with this equipment.

Remember that the fuel station environment is highly flammable and combustible. Therefore, make sure that actual installation is performed by experienced personnel, licensed to perform work in fuel station and at a flammable environment, according to the local regulations and relevant standards.

For UL listing's, all peripherals equipment connected to the device must be UL listed and suitable for the applications.

WARNING - EXPLOSION HAZARD

Install the Product only in the non-hazardous area of the fuel station.
Use standard test equipment only in the non- hazardous area of the fuel station and approved test equipment for the hazardous areas.
In the installation and maintenance of the Product, comply with all applicable requirements of the National Fire Protection Association NFPA-30 "Flammable and Combustible Liquids Code", NFPA-30A "Code for Motor Fuel Dispensing Facilities and Repair Garages", NFPA-70 "National Electric Code", federal, state and local codes and any other applicable safety codes and regulations.
Do not perform metal work in a hazardous area. Sparks generated by drilling, tapping, and other metal work operations could ignite fuel vapors and flammable liquids, resulting in death, serious personal injury, property loss and damage to you and other persons.

CAUTION - SHOCK HAZARD

Dangerous AC voltages that could cause death or serious personal injury are used to power the Product. Always disconnect power before starting any work. The Product has more than one power supply connection port. Disconnect all power before servicing.

CAUTION – EXTERNAL WIRING

For supply connections, use wires suitable for at least 90°C.

Signal wiring connected in this box must be rated at least 300 V.

WARNING – PASSING VEHICLES

When working in any open area of fuel station, beware of passing vehicles that could hit you. Block off the work area to protect yourself and other persons. Use safety cones or other signaling devices.

WARNING

Components substitutions could impair intrinsic safety.
Attaching unauthorized components or equipment will void your warranties.

CAUTION

Do not attempt to make any repair on the printed circuit boards residing in the Product, as this will void all warranties related to this equipment.

PROPRIETY NOTICE

DISCLAIMER

This document is provided for reference only. Although every effort has been made to ensure correctness, ORPAK SYSTEMS does not guarantee that there are no errors or omissions in this document.

FCC Compliance Statement

The FCC Wants You to Know:
This equipment has been tested and found to comply with the limits for a Class B digital device, pursuant to Part 15 of the FCC rules. These limits are designed to provide reasonable protection against harmful interference in a residential installation. This equipment generates uses and can radiate radio frequency energy and, if not installed and used in accordance with the instructions, may cause harmful interference to radio communications. However, there is no guarantee that interference will not occur in a particular installation. If this equipment does cause harmful interference to radio or television reception, which can be determined by turning the equipment off and on, the user is encouraged to try to correct the interference by one or more of the following measures:
a) Reorient or relocate the receiving antenna.
b) Increase the separation between the equipment and receiver.
c) Connect the equipment to an outlet on a circuit different from that to which the receiver is connected.
d) Consult the dealer or an experienced radio/TV technician.

FCC Warning

Modifications not expressly approved by the manufacturer could void the user authority to operate the equipment under FCC Rules.

This document is the property of:

ORPAK SYSTEMS Ltd.

ISRAEL

TABLE OF CONTENTS

Paragraph **Page**

SECTION 1 GENERAL DESCRIPTION

TABLE OF CONTENTS

Paragraph **Page**

TABLE OF CONTENTS

Paragraph **Page**

TABLE OF CONTENTS

Paragraph **Page**

LIST OF ILLUSTRATIONS

Figure **Page**

LIST OF TABLES

Table **Page**

SECTION 1
GENERAL DESCRIPTION

1-1. *SCOPE*

This manual provides assistance for installing Gasboy's Fuel Truck Controller. The system must be installed as described in this manual to ensure the system reliability and proper operation. This manual includes a general and functional description of the Fuel Truck Controller and its main components. It also provides the installation procedures for the Fuel Truck Controller.

This manual is intended for qualified authorized installers of the Fuel Truck Controller and its components.

1-2. *DESCRIPTION*

Fuel Truck Controller is a fuel control and data acquisition system. Fuel Truck Controller system is a self-contained weather-resistant cabinet installed on fuel trucks used as mobile refueling stations.

Fuel Truck Controller (see Figure 1-1) is a core component in Gasboy's solution for mobile refueling stations. Fuel Truck Controller provides the central function of the mobile site controller. It also fulfills other essential services on site such as Vehicle/Driver Identification System, Transaction data storage, devices control and more.

Figure 1-1. Fuel Truck Controller - General View with Shock Absorber Assembly

1-3. *SYSTEM OVERVIEW*

1-3.1. *Fuel Truck Controller System*

Fuel Truck Controller system is a mobile Fleet Management System. The system controls, monitors, and stores on-the-spot refueling data by tanker truck for customers with large land moving equipment. The system is suitable for a large range of home base customers.

The system consists of a Controller mounted on the truck and Vehicle Identification Units (VIU) installed on the fleet vehicles.

Fuel Truck Controller enables refueling of vehicles equipped with VIUs only. The vehicles fuel inlet must be positioned in the proximity of the fuel pump nozzle, ensuring end-to-end authentication of the vehicle, meaning that only authorized vehicles get fuel. After providing fuel, the system registers the transaction data (see Figure 1-2).

The heart of the mobile solution is the Orpak Controller Unit (OrCU) operating with the SiteOmat automation software. SiteOmat runs on an embedded operating system. OrCU is a hardware platform designed to survive the harsh gas station environment. It uses a solid-state flash disk and Real Time Clock (RTC) with backup, along with surge suppressors for transients and noise immunity. The system also includes power fail recovery mechanisms.

1-3.2. *Vehicle Identification*

Vehicle Identification is an essential feature for maximal control and savings on fuel expenditure. The dispenser is authorized to refuel after a positive identification of the vehicle and only while the nozzle is inside the fuel inlet of the identified vehicle. All transaction information is automatically recorded. A combined vehicle and driver identification is also possible for tight tracking.

1-3.3. *Remote Web Access*

Remote Web-based capabilities for monitoring, management, and maintenance are available. A standard PC with Internet Browser (Explorer) is used for remote management of Fuel Truck Controller. There is no need for special purpose management software thanks to the built-in Web server technology integrated into Fuel Truck Controller.

1-3.4. *Fleet Head Office*

Centralized management is provided by the optional Fleet Head Office server. The Fleet Head Office consolidates the data from multiple sites and generates reports, including exception reports. It also enables control of the limits and restrictions placed on the various fleet vehicles. Furthermore, authorized fleet personnel are able to log in remotely and are always in control.

1-3.5. *Restrictions and Limits*

Control of a fleet's fuel consumption can be maximized by defining limits. Optional limits include: volume per day/week/month, and fuel type. In case of communication failure, the specific site will be able to refuel for a predefined grace period (parameter) using the most recent limits stored in its database.

1-3.6. *Fuel Truck Controller Capabilities for Mobile Station Management*

The Fuel Truck Controller provides features for a comprehensive mobile refueling station management by enabling a large variety of communication links: Cellular, dial-in modem, Wi-Fi, radio modem, and satellite.

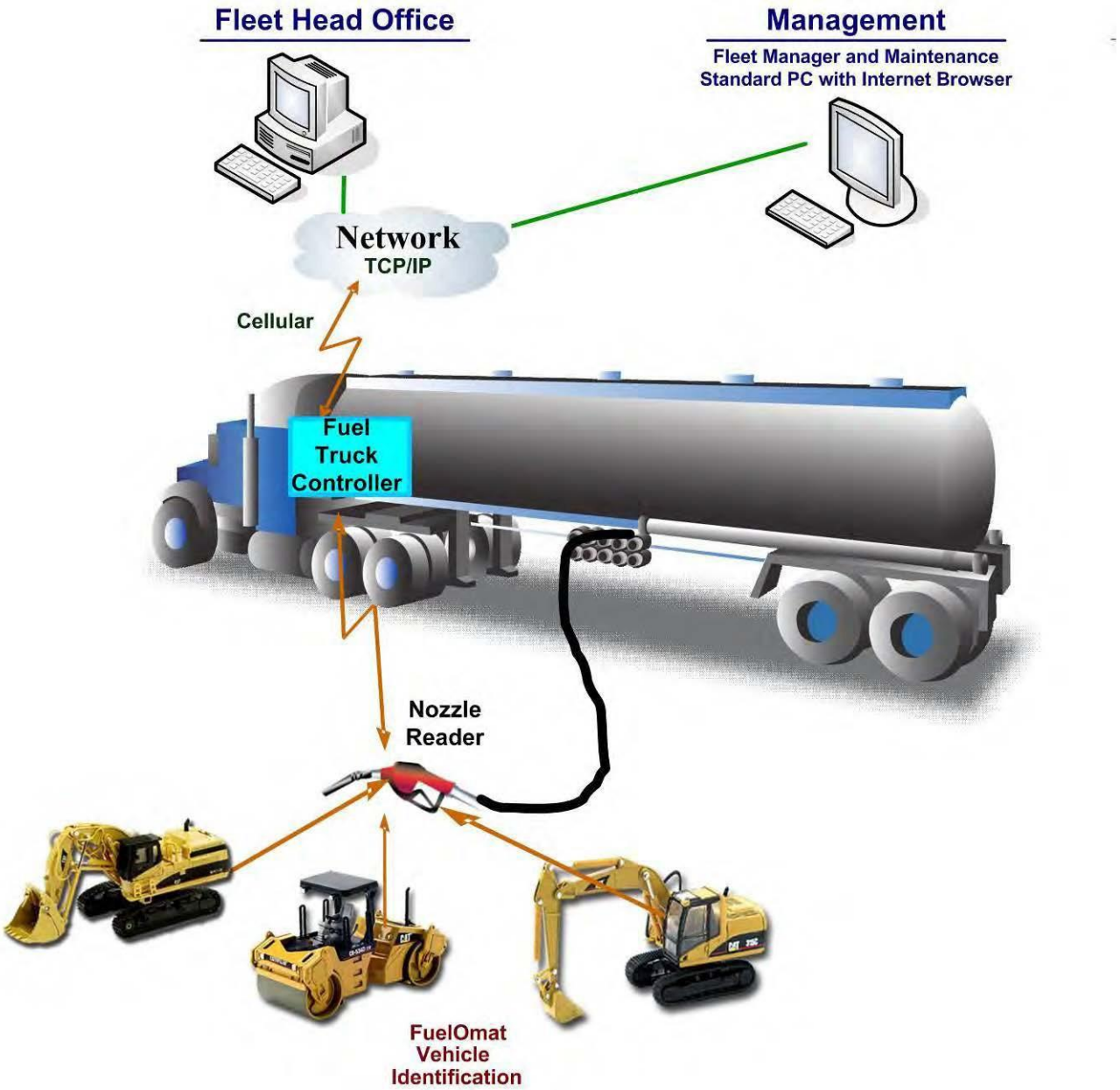

Figure 1-2. Fuel Truck Controller on a Fuel Truck - General Configuration Diagram

1-3.7. *System Workflow - Example*

An example of an operational workflow for self-service at the Fuel Truck Controller site is provided below:

The Fuel Truck Controller equipped fuel truck arrives at the construction site to refuel its fleet vehicles. All fleet vehicles equipped with FuelPoint PLUS devices. The operator inserts the nozzle into a vehicle fuel inlet and waits for authorization. Truck data is automatically read and stored in the Controller for authentication and authorization. Upon approval, the fueling transaction starts, at the end of which the transaction data is kept internally until transferred to the Head Office (HO) for future billing.

1-4. *FUEL TRUCK CONTROLLER STRUCTURE*

1-4.1. *Main Components*

The following is a short description of the Fuel Truck Controller main sub units:

OrCU

OrCU is a complete controller with its own embedded operating system. The unit consists of an embedded hardware platform with a solid-state flash hard disk, RTC with backup, along with surge suppressors for transient and noise immunity.

It features two separate and isolated networks (TCP/IP over Ethernet). One network links the Fuel Truck Controller system components. The second network is intended for external remote communication (Head Office, third party systems). This network is protected by SSL security.

OrCU includes a built-in server for Web access through an internet browser (Windows® Explorer).

8-Port CommVerter

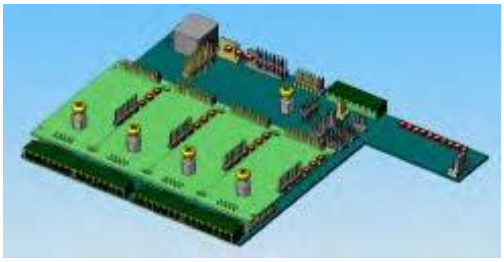

The 8-Port CommVerter is the communication interface to the peripheral pumps. It consists of communication modules for the mechanical pump elements. The CommVerter includes one MPI-C card and sub card for interface to two mechanical pumps, an Ethernet® Switch.

The CommVerter communicates with the Site Controller (OrCU) via a LAN (Ethernet) link.

Optional Mobile Printer

Fuel Truck Controller includes an optional Mobile Printer. Installed in the driver's cabin and directly connected to the Controller Unit viva RS-232 link, this compact device prints out all fueling transactions.

The Mobile Printer includes two LED indicators on the front panel:

- Green: Power ON
- Red: Out of paper

1-4.2. *Fuel Truck Controller General Configuration*

Figure 1-3 shows a general configuration diagram of Fuel Truck Controller.

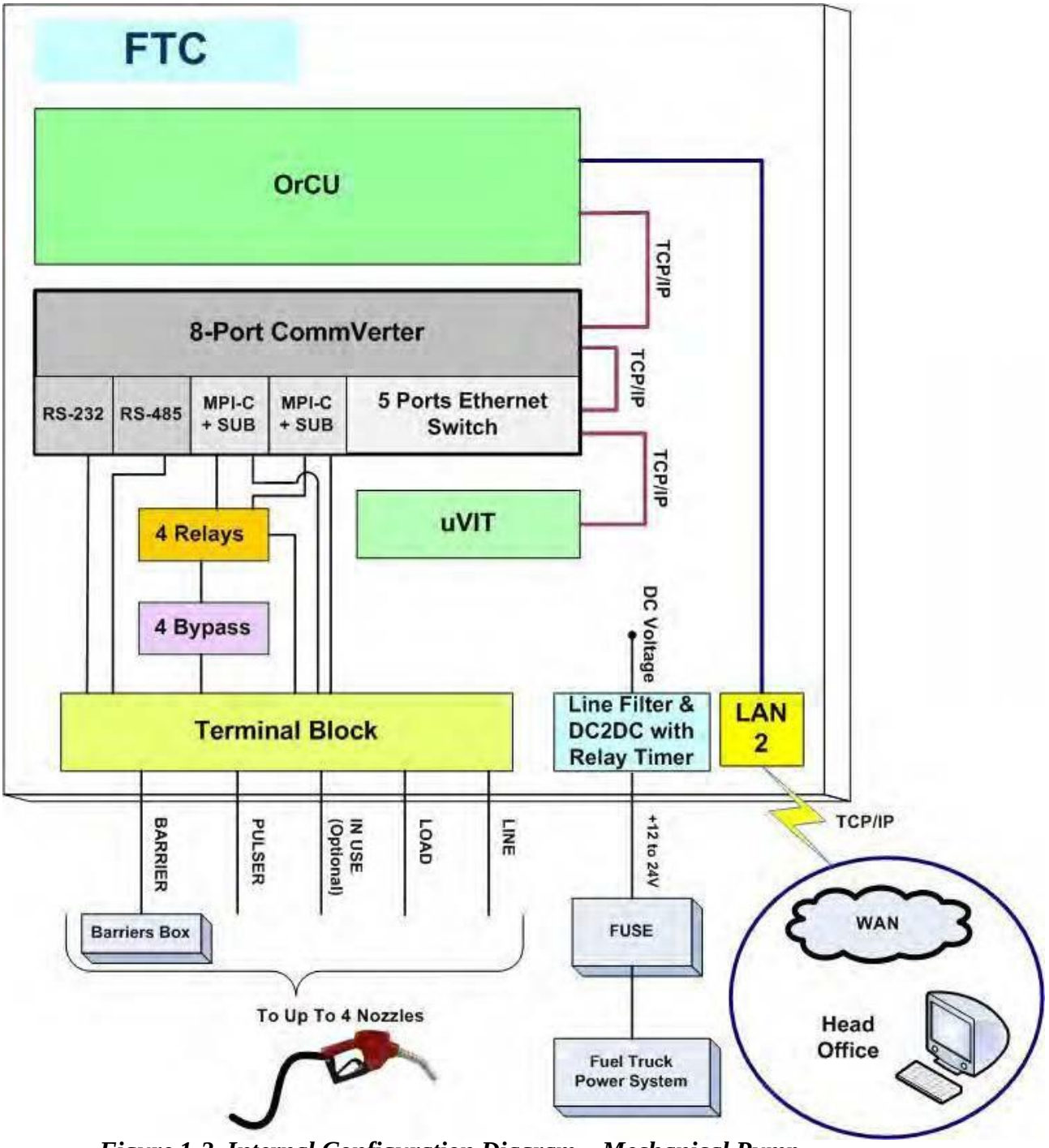

Figure 1-3. Internal Configuration Diagram – Mechanical Pump

1-4.3. *Fuel Truck Controller Main Components Location*

Figure 1-4 shows the location of the main components of Fuel Truck Controller.

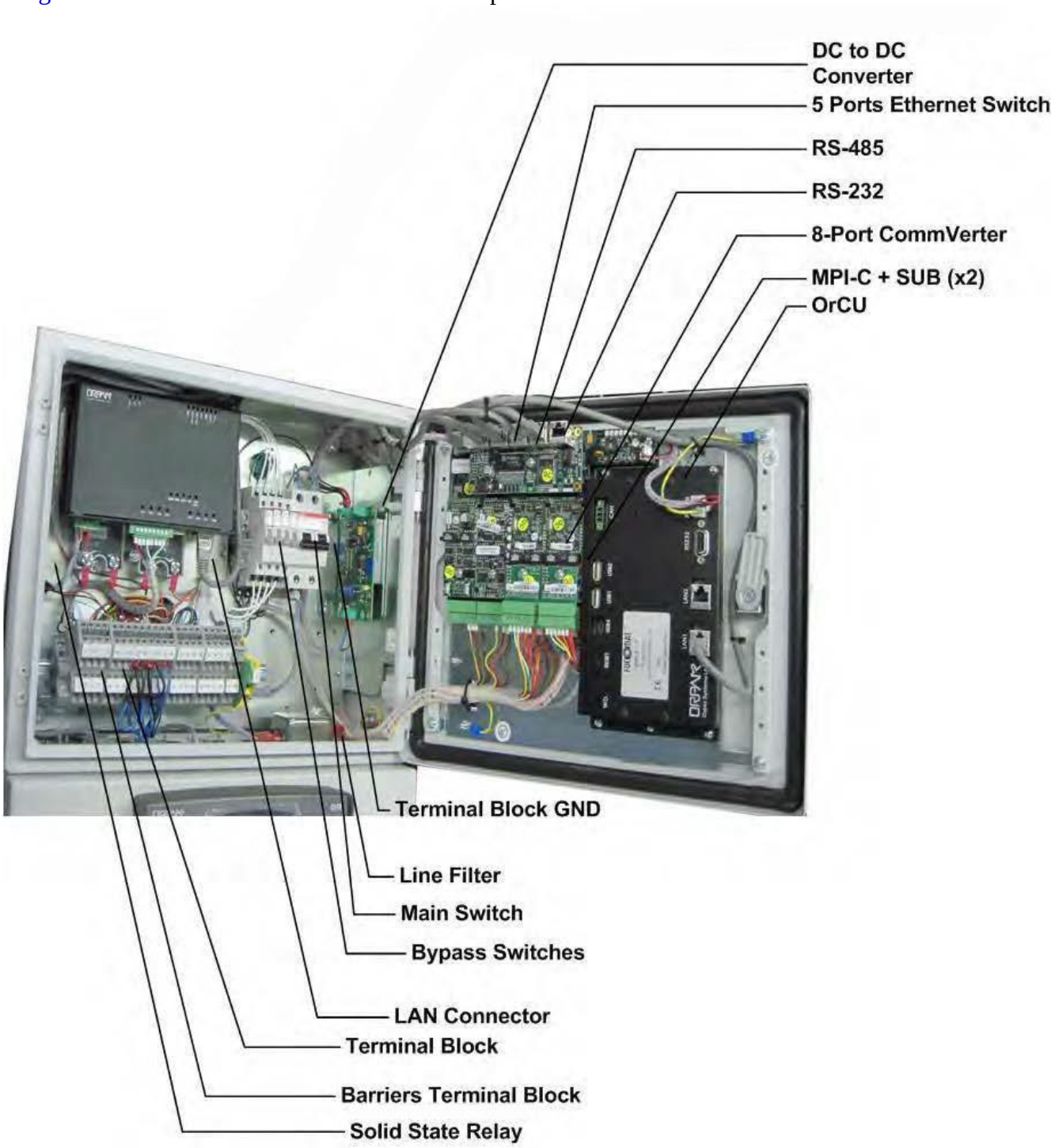

Figure 1-4. Fuel Truck Controller Internal Components Location

1-5. *AVAILABLE CONFIGURATIONS*

1-5.1. *General*

The Fuel Truck Controller is available in several configurations in accordance with its intended use and with the components installed. All configurations are manufactured in accordance with specific customer request.

The following paragraphs describe the several configurations and their components.

1-5.2. *Vehicle Identification System – FuelPoint PLUS*

The following options are available for vehicle identification:

- **Wireless Gateway Terminal:** (WGT) – with this terminal, the vehicle identification process is performed in a wireless mode.
- **No vehicle identification unit**: The vehicle identification process will be done manually by the truck driver with any accepted authorization devices such as cards, or tags. This option will require an external tag reader connected to Fuel Truck Controller (refer to paragraph 1-5.6).

1-5.3. *WGT External Box – Optional*

The WGT receives and decrypts DataPass, FuelOpass, and VIU signals and transmits their information to the station automation system (OrCU) in a secure manner over an RF signal. This setup enables the RF signal to travel through various routes and bypass possible interferences (such as a big truck/bus). The transmission signal range is 10 meters.

The WGT is designed to be installed in a designated external box on the truck on the side facing the fueling elements. The WGT will be connected to the Fuel Truck Controller box using CAT-5E cable. More than one WGT external boxes can be mounted on one truck for better RF area coverage. In this case one WGT box will be Master and the other(s) will be routers. For more information, refer to, *MDE-4815 WGT External Installation Guide*.

Figure 1-5. Wireless Gateway Terminal (WGT)

The units that provide data to the WGT are:

- **DataPass** - DataPass is a miniature unit that connects to the vehicle bus and captures data from the vehicle CPU/BUS. It then transmits this data to the nearest WGT in the forecourt.
- **FuelOpass** - FuelOpass is a passive vehicle identification tag for refueling. Its encrypted data includes the account to be charged and is read by the Nozzle Reader device using RFID contactless technology.
- **VIU** - VIU is an active Vehicle Identification Unit for refueling. The data includes odometer and engine hour meter.
- **Nozzle Reader** (NR) - Nozzle Reader is a self-contained unit installed on the nozzle which reads the FuelOpass data using contactless technology.

To obtain maximal grid availability, several WGT units can be installed to create a robust 'mesh' network.

1-5.4. *Modem/Router*

Consult your local cellular service provider for the type of router supported in your area. The router will be provided from your service provider with proper installation instructions. The router will be connected to the LAN input in OrCU box.

1-5.5. *External TAG Reader (OrTR)*

OrTR (PA04020201) - OrTR (Orpak Tag Reader) receives Orpak tag signals for refuel authorization purpose. OrTR transmits the information to the Station automation system (OrCU) over a CAT-5E or RS-485 cable. OrTR contains LCD with 2 lines display. OrTR is designed to be installed in a non-hazardous, convenient, and secured area in accordance with local state regulations.

In the vehicle, two installation alternatives are available:

- External box in any non-hazardous area. This installation mode requires a dedicated mounting bracket. Such an installation shall be performed within safety distances required for any installation adjacent to dispensers.
- Installation beneath Fuel Truck Controller box with mounting bracket (M09680B119).

- For more information, refer to *MDE - 4816 OrTR Installation Guide*.

Figure 1-6. Tag Reader (OrTR)

Figure 1-7. Fuel Truck Controller with OrTR

1-5.6. *Fuel Truck Controller with OrTR and WGT*

In this configuration (see Figure 1-8), the Fuel Truck Controller encompasses most types of authorization devices. The WGT provides vehicle identification process in wireless mode while Orpak Tag Reader (OrTR) reads Orpak tag signals to complete any transaction.

WGT communicates with Fuel Truck Controller over the LAN (CAT-5E cable) and is powered directly by Fuel Truck Controller. RF transmission of data from WGT enables sending data of all transactions to the Station controller.

Figure 1-8. Fuel Truck Controller with OrTR and WGT

1-5.7. *Fuel Truck Controller - Standard Models*

Table 1-1 define all the available product numbers for the different configurations of Fuel Truck Controller:

Table 1-1. Fuel Truck Controller - Standard Models

Name	*Gilbarco P/N*	*Orpak P/N*
Fuel Truck Control Unit for 2 hose	PA039600200	800938901
Fuel Truck Control Unit for 4 hose	PA039600400	800938902

1-6. *SECURITY AND PROTECTION*

1-6.1. *General*

The transaction activities of the Fuel Truck Controller are secured and protected for transmission and authorization activities.

1-6.2. *Authorization Security*

The contactless tags include Triple Data Encryption Standard (DES) encrypted data for user identification and billing. Consequently, the Fuel Truck Controller includes a special Security Application Module (SAM) for decryption and matching identification. Upon tag reading, the Fuel Truck Controller attempts to decrypt the string from the tag. The Fuel Truck Controller disregards Tags whose security scheme does not match the Fuel Truck Controller internal SAM.

1-6.3. *Network Security*

The Ethernet LAN is isolated from the external WAN by the Site Controller (OrCU). In case of remote maintenance, a firewall should be applied either at the router level or preferably at the Home Base Station level.

1-6.4. *RF Network Security*

The Fuel Truck Controller EIA 802.15.4 RF network is encrypted, using the AES 128 security standard.

1-6.5. *Maintenance Security*

The Fuel Truck Controller maintenance and setup procedures require inserting a user name and password for access. For further information, refer to the *MDE-4817 SiteOmat Station Controller Setup Manual.*

Fuel Truck Controller is locked by key to prevent unauthorized access to the bypass switches and controller electronics.

1-6.6. *RTC Backup*

The Real Time Clock backup is based on a maintenance free 1 Farad supercapacitor. Backup time is 3 to 6 days before time and date loss.

1-7. *HOUSING*

Fuel Truck Controller enclosure is a weather-proof metal cabinet able to sustain the harsh environment of the Island. The Fuel Truck Controller is installed with a rear shock absorber assembly that dampens vibrations from truck and road (see Figure 1-9).

The overall structure is installed vertically on any flat surface and secured with eight screws (see Figure 1-10).

Fuel Truck Controller is locked by key for safety and security. The key should be kept in a well kept, secure, and safe place.

We recommend installing the Fuel Truck Controller box in the truck cabin or any other protected compartment on the truck. Any installation should provide convenient access for service and maintenance.

Figure 1-9. Fuel Truck Controller - General View with Shock Absorber Assembly

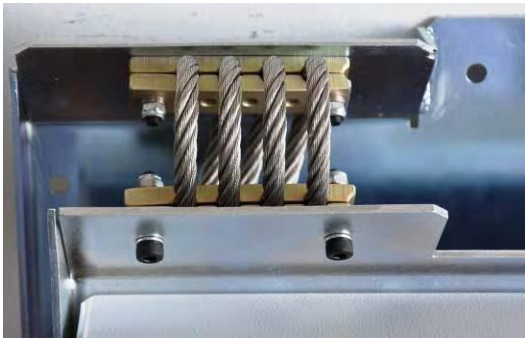

Figure 1-10. Shock Absorber - Detail

1-8. *SPECIFICATIONS*

The following physical, electrical, and environmental specifications are applicable to the Fuel Truck Controller:

Supply Voltage:	12 – 24 VDC
Power Consumption:	2.5 A max.
Operating Temperature:	-22 °F to +104 °F (-30 °C to +40 °C)
Storage Temperature:	-22 °F to +104 °F (-30 °C to +40 °C)
Humidity:	80% Non-condensing
Dimensions:	
- Box without Shock Absorber Assembly:	W x H x D: 15 x 11.80 x 6.10” (380 x 300 x 155 mm)
- Box with Shock Absorber Assembly:	W x H x D: 16.50 x 18.10 x 7.90” (420 x 460 x 200 mm)
Communication Interface:	RS-485 – 9600 bps, Half-Duplex RS-232 Ethernet RJ-45 - 10 Mbps
Valve Control Maximum Current (4 Solid State Relay Channels):	12 V/2 A, 24 V/1 A
Pulser Power Supply Voltage	12 VDC/30 mA max
Pulser Input High level Voltage	9 to 15 VDC
Pulser Input High level sink current (@15 V)	3 mA
In use “ON” level (Input)	Dry contact only (5 V/1 mA maximum)

1-9. *STANDARDS*

1-9.1. *Communication Standards*

The Fuel Truck Controller communicates, in different models, over the following standards:

- RS-485 link
- TCP/IP over Ethernet
- EIA 802.15.4

1-9.2. *Security Standards*

- Triple DES encryption for Payment Devices (Contactless tags, magnetic stripe cards, etc.)

1-10. *MANUAL STRUCTURE*

This manual comprises of the following sections:

Section 1: General Description

This section provides a general description of the Fuel Truck Controller system.

Section 2: Preliminary Installation Procedures

This section provides the preliminary installation requirements and procedures to be performed before installing Fuel Truck Controller.

Section 3: Installation Procedures

This section provides a detailed description of Fuel Truck Controller installation requirements and procedures.

Section 4: Maintenance

This section provides basic maintenance instructions for the Fuel Truck Controller.

Section 5: Glossary

This section includes a glossary of terms used for the Fuel Truck Controller description.

Appendix A: Wiring Diagram

This appendix includes the Wiring Diagram of the Fuel Truck Controller.

Appendix B - Site Survey Form – Example

This appendix includes an example of a form to be filled during a Site Survey. You may add or remove parts of the questionnaire in order to fit your customer working environment.

1-11. *USING THIS MANUAL*

This manual includes alerting comments inserted along the document in order to draw the reader's attention to important issues. The comments are accompanied by symbols for ease of reference. The following comment types are used:

WARNING

An operating procedure, practice, etc., if not correctly followed, could result in injury or loss of life.

CAUTION

An operating procedure, practice, etc, if not strictly observed, could result in damage to, or destruction of equipment.

TIP

This note is aimed for using the system in a better, more efficient way.

NOTE

This comment is of importance for emphasizing.

INSIGHT

More detailed technical/functional information regarding a relevant issue.

1-12. *REFERENCES*

For additional and related information regarding the Fuel Truck Controller system, refer to the following manuals:

- MDE-4812 8-Port CommVerter User's Manual
- MDE-4815 Fuel Point PLUS Installation
- MDE-4816 OrTR Installation Guide
- MDE-4817 SiteOmat Station Controller Setup and Maintenance Manual
- MDE-4818 SiteOmat Station Controller Setup Manual

SECTION 2
PRELIMINARY INSTALLATION INSTRUCTIONS

2-1. *GENERAL*

This section provides the preliminary installation procedures for Fuel Truck Controller. These instructions shall be performed in order to ready the fueling truck to the installation of Fuel Truck Controller.

These procedures include:

- Preliminary installation instructions
- Wiring and Wire Conduits requirements

2-2. *PRELIMINARY INSTALLATION INSTRUCTIONS*

2-2.1. *General*

NOTE

Perform a truck survey prior to installation.
Refer to Appendix B "Site Survey Form."

Installation procedures and requirements depend, to some extent, on the specific fuel dispenser models and the fuel truck layout. Therefore, use the information in this section to develop installation plans for each specific installation. Since installation requirements vary widely from case to case, no installation hardware is supplied by the equipment manufacturer and installation planners must develop their own requirements.

The customer should provide an installation plan designed by an authorized engineer and applicable to all authorities. This plan design should reflect the existing electric infrastructure of the site.

2-2.2. *Precautions and Safety Notes*

Prior to actual installation activities, carefully observe the precautions and safety notes below.

> ***WARNING***
>
> Before installing or servicing equipment, carefully observe the warnings and precautions provided at the beginning of this manual.

- Remember that the fuel truck environment is highly flammable and combustible. Therefore, make sure that actual installation is performed by experienced personnel licensed to perform work in fuel trucks and capable of implementing all applicable requirements of the National Fire Protection Association NFPA-30 "Flammable and Combustible Liquids Code", NFPA-30A "Code for Motor Fuel Dispensing Facilities and Repair Garages", NFPA-70®A "National Electric Code (NEC®)", federal, state, and local codes and any other applicable safety codes and regulations.
- System power may come from more than one source. Disconnect all power sources before attempting to work on the system.
- Install the Fuel Truck Controller only in non-hazardous locations, in accordance with the safety restrictions.
- Fuel Truck Controller site preparation is in the customer's responsibility.
- Do not connect power to the Fuel Truck Controller until complete installation is inspected and certified.
- Do not perform any metal work in the hazardous area. Sparks generated by drilling, tapping, and metal work operations could ignite fuel vapors and flammable liquids, resulting in death, serious personal injury, property loss, and damage to you and other persons.

2-3. *CONDUITS INSTALLATION*

2-3.1. *General*

The installation of the Fuel Truck Controller requires setting several conduits in the fuel truck. The conduits are required for the routing and protection of the different types of cables.

The installation of the Fuel Truck Controller requires preparing the conduits and cable layout in the fuel truck beforehead. This procedure consists of:

- Installing conduits within the truck
- Inserting the proper cables
- Connecting to power

2-3.2. *Conduit Requirements*

Conduits must comply with the following requirements:

- Conduits should be installed in accordance with local regulations.

- It is recommended to use metal conduits (preferably Vx metal) to provide the necessary shielding and protection.
- Conduits should be inserted in the Fuel Truck Controller through openings provided in the bottom plate (see Figure 2-1). Connect the wiring through optional glands or appropriate metal tubing. For UL/cUL listing, this product has only been evaluated for use without the optional glands.

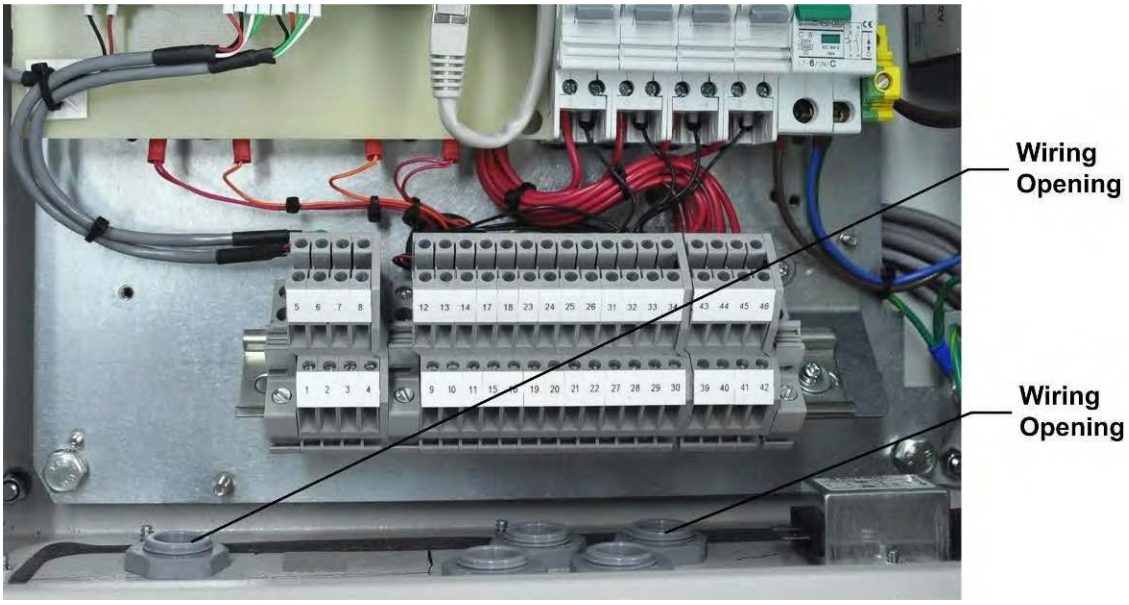

(*) All glands in picture are optional.

Figure 2-1. Fuel Truck Controller Wiring Openings

2-3.3. *Type of Conduits in the Truck*

The types of conduits in the truck are a function of the different equipment and their location in the truck. The following conduits are required in the Fuel truck:

- **Voltage conduits**
  - DC power for Fuel Truck Controller
  - Pump control from pumps to Fuel Truck Controller
  - Pump In-use signal from pumps to Fuel Truck Controller
- **Communication conduits**
  - Pulser from pumps to Fuel Truck Controller
  - Barriers/Coils from pumps to Fuel Truck Controller – Non-Intrinsically Safe wiring (NIS). Barriers may be enclosed in a special, separate Barriers Box.
- **Power conduit**
  - Fuel Truck Controller is fed from the truck power system after the ignition switch. Conduits of power cable should be done in accordance with local practice.

> ***NOTE***
>
> Barriers Box is not provided with Fuel Truck Controller.

2-3.4. *Wiring Openings in Fuel Truck Controller*

Fuel Truck Controller includes several wiring openings to carry specific wires, as listed in Table 2-1 and shown in Figure 2-1.

Table 2-1. Conduits into Fuel Truck Controller

No.	*Conduit Type*	*Type*
1	Low voltage	Pulser, Barrier
2	Voltage	DC power
3	Voltage	Control, In-use

2-3.5. *Conduits Installation Procedures*

Proceed as follows:

1. Determine the location of the Fuel Truck Controller in the fuel truck.
2. Install a Junction Box (J-box) close to the valve for valve control.
3. Install a J-box for the pulser and nozzle antenna.
4. Deploy two conduits from the J-boxes to the Fuel Truck Controller (pulser, valve and nozzle antenna).
5. Deploy a conduit from truck power system to Fuel Truck Controller. Fuel Truck Controller is fed from the truck power system, after the ignition switch.

2-4. *CABLES*

2-4.1. *General*

This paragraph describes the requirements and procedures for the insertion of cables in the conduits.

NOTE

The type of required cable varies in accordance with the device it connects. The wire used must be stranded and not a solid core. Select a cable specification in accordance with local environment conditions.

CAUTION

For supply connections, use wires suitable for at least 90°C.

Signal wiring connected in this box must be rated at least 300 V.

2-4.2. *Cable Types*

Table 2-2 lists the types of cables used for the wiring of the Fuel Truck Controller system.

Table 2-2. Fuel Truck Controller, Cables Type

No.	*Function*	*Type*
1	Power supply and valve control	As used in vehicles 1.5 – 2.5 mm² (15 to 13 AWG)
2	Coil (Barrier)	Data communication cable, 300 V RMS, 90 ºC, shielded twisted pair, oil resistant, 24 AWG, low capacitance below 60 PF/meter similar to Belden 9729 cable
3	Pulser and In-use signal	
4	LAN	CAT-5E, Shielded, 300 V RMS, 90 ºC similar to Belden 121700A
5	GND	Ground cable 0.4” (10.8 mm^2)

Connections should be done through a J-box (4x4x4” (10x10x10 cm)) located near peripherals.

2-4.3. *Cables Routing*

Route the cables from peripherals to Fuel Truck Controller as listed in Table 2-3 and Table 2-4. Proceed as follows:

Table 2-3. Fuel Truck Controller, Cables Routing

No.	*Functional Description*	*From*	*To*	*Cable Type (*)*
1	DC Power	DC to DC voltage converter	Fuel Truck Controller box terminal block	1
2	LAN		Low voltage J-box	4
3	Pulser	Fuel Truck Controller box	Meter register, Pulser	3
4	Valve control	Valve	Fuel Truck Controller box terminal block	1

Route cables from the nozzles to Fuel Truck Controller through a Barriers box. Proceed as follows:

Table 2-4. Nozzles to Fuel Truck Controller, Cables Routing

No.	*Functional Description*	*From*	*To*	*Cable Type (*)*
1	Nozzle antenna	J-box	Barriers box	2
2	Barriers	Barriers box	Fuel Truck Controller terminal block	2

(*) Refer to Table 2-2.

2-5. *Electrical System*

2-5.1. *External Fuse*

The Fuel Truck Controller requires an external fuse. Additional vehicle type 6 Amp fuse should be installed between the truck's power supply system and the Fuel Truck Controller.

!

SAFETY CAUTION

The fuse should link the wire very close to the battery and at the distribution point (via a distribution block).

2-5.2. *Fuel Truck Controller Power System*

The truck's power supply system is connected to the terminal block in the Fuel Truck Controller. The system uses a Line Filter between the terminal block and the main switch in order to attenuate conducted interference. The Line Filter is coupled with Timer relay; this timer provides 30 seconds delay between power-feed and power output. This delay protects against short bursts of power when the driver starts the truck. The delay is reset at each starting attempt. Consequently, Fuel Truck Controller is turned on 30 seconds after the truck is powered, which is when the motor should be operating steadily.

Fuel Truck Controller does not include a power switch.

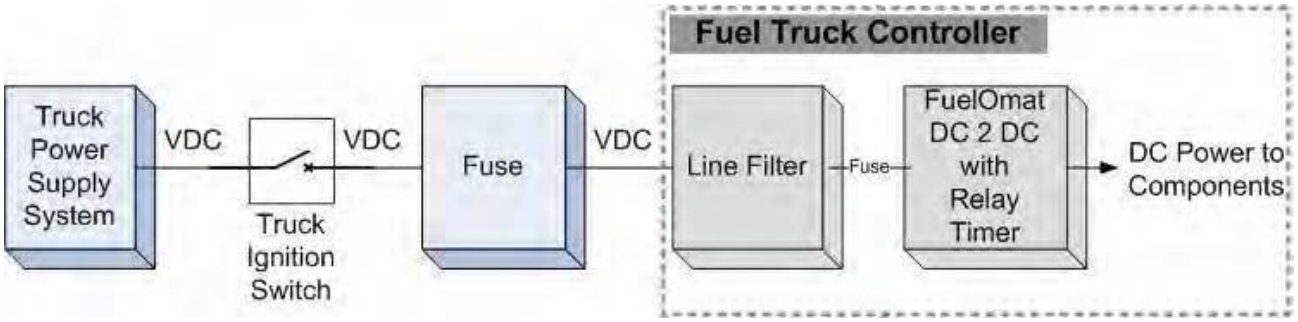

Figure 2-2. Power Supply – Block Diagram

2-6. GROUNDING AND SHIELDING

Proper system grounding is an extremely important part of the system installation. As with the DC power, the grounds for all system components should return to the same circuit breaker panel. This helps you assure a common ground throughout the system and is necessary for protection of the RS-485 data loop circuitry.

The Fuel Truck Controller box is shielded through its installation screws to the vehicle chassis.

Fuel Truck Controller includes several grounding studs in order to comply with requirements. The DC power ground wire should be attached to the stud close to the Line Filter.

Each shielded cable connected to the Fuel Truck Controller is stripped of its shielding at the box entry. Its shield wires are bundled together at the entrance of the box and attached to a shielding stud within the Fuel Truck Controller box. Figure 2-3 shows a functional diagram of the shielding.

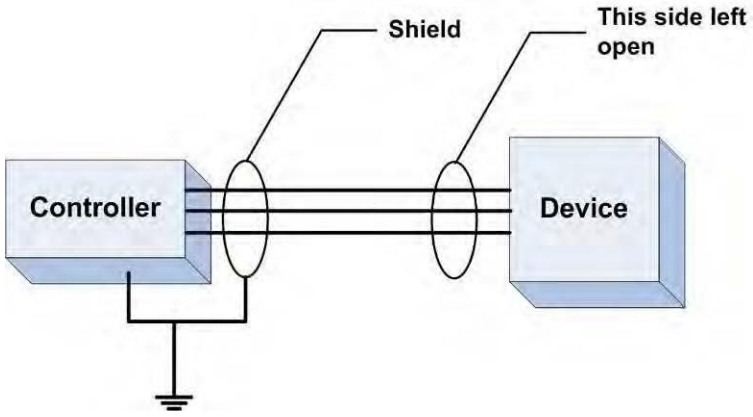

Figure 2-3. Cables Shielding

2-7. CONNECTIONS TO FUEL TRUCK CONTROLLER

Most connections to the Fuel Truck Controller are performed to the Terminal Block located at the bottom of the box (see Figure 2-4). The required connections are:

1. Pump wiring connections:
    - Pulser
    - Valve
    - In use (Optional, not existing in most cases)
2. Communications:
    - RS-485 for peripheral device
3. Power:
    - DC Power to Line Filter
4. Other connections, not to the Terminal Block:
    - LAN connection

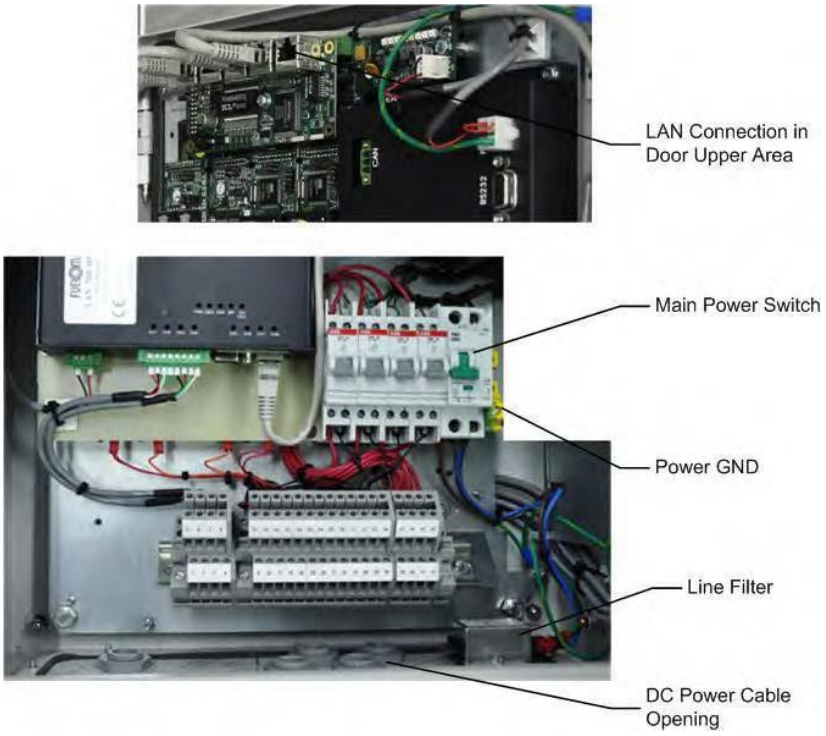

(*) All glands in picture are optional

Figure 2-4. Fuel Truck Controller Terminal Block, Power and LAN Connections

SECTION 3
INSTALLATION PROCEDURES

3-1. *GENERAL*

This section provides the installation procedures for the Fuel Truck Controller.

These procedures include:

- Fuel Truck Controller installation
- Wiring
- Post installation check

3-2. *INSTALLATION SPECIFICATIONS*

3-2.1. *General*

NOTE

Perform a site survey of the fuel truck prior to installation.

Installation procedures and requirements depend, to some extent, on the specific fuel truck and its mechanical and electrical layout. Therefore, use the information in this section to develop an installation plan for each specific installation. Since installation requirements vary widely from case to case, no installation hardware is supplied by the equipment manufacturer and installation planners must develop their own requirements.

The customer should provide an installation plan, designed by an authorized engineer. This plan design should reflect the existing electric infrastructure of the fuel truck.

3-2.2. *Precautions and Safety Notes*

Prior to actual installation activities, carefully observe the precautions and safety notes detailed in paragraph 3-2.2 and at the opening pages.

3-3. *FUEL TRUCK - OVERVIEW*

3-3.1. *General*

Prior to installation, you are required to obtain an overview of the fuel truck functional architecture. This overview is required in order to draw an architecture diagram with all components and their communication links.

Figure 3-1 shows a functional diagram of the links within the fuel truck with mechanical pump.

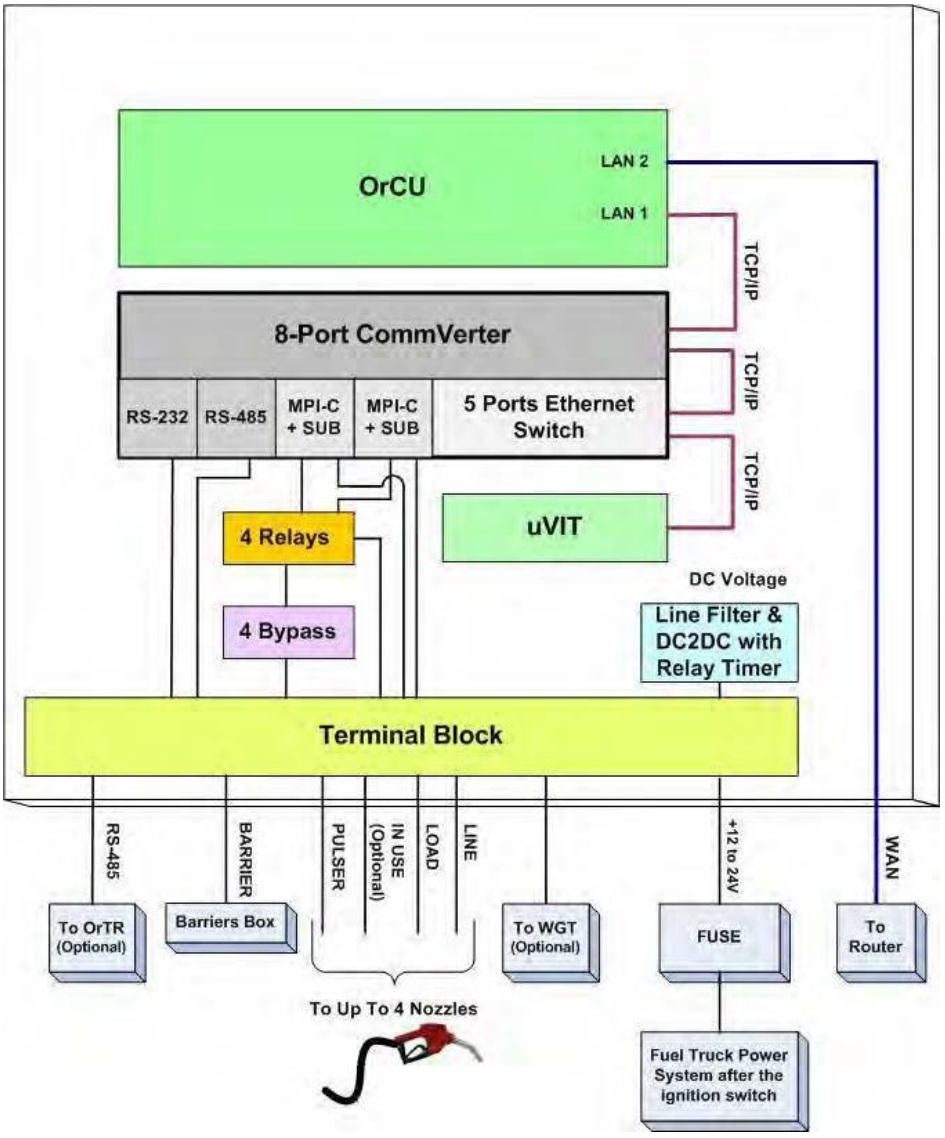

Figure 3-1. Fuel Truck Controller with Mechanical Pumps – System Diagram

3-4. *MAPPING THE TRUCK*

3-4.1. *General*

The mapping of the fuel truck is required prior to installation. This procedure consists of the following steps:

3-4.2. *Locating all objects of the fuel truck*

- Locate installation of related objects in the fuel truck
- Locate the intended position of the Fuel Truck Controller
- Draw a basic map of the site with all the objects

3-4.3. *Assigning Logical IDs*

Logical IDs should be assigned to the Pump and Nozzle:

- Assign an id. to the pump (P)
- Assign an id. to its nozzle (N)

3-5. *INSTALLING THE FUEL TRUCK CONTROLLER*

The Fuel Truck Controller can be installed in two configurations:

a. Installation of Fuel Truck Controller only
This type of configuration is designed for installing the Fuel Truck Controller in locations, such as inside truck cabins, that are not exposed to the harsh environment and thus do not require shock absorbers.

b. Installation of Fuel Truck Controller with Shock Absorber Assembly
This type of configuration is designed for the installation of the Fuel Truck Controller in vehicles (not in driver's cabins) in areas of the vehicle that are exposed to the harsh environment which need shock absorbers.

For installation of the Fuel Truck Controller with Shock Absorber Assembly, the client must order the Shock Absorber Assembly (M09680B039) in addition to ordering the Fuel Truck Controller (PA039600200).

3-5.1. *Installation Assembly Parts*

Table 3-1 lists the assembly parts for the installation of the Fuel Truck Controller.

Table 3-1. Fuel Truck Controller, Installation Assembly Parts

Item No.	*Part Number*	*Description*	*Qty*
1	800938901 (PA039699200)	Fuel Truck Controller	1
2	819040120 (M09680B039)	Shock Absorber Assembly	1
3	815216200	Pan head screw, M6 x16	8
4.	815322200	Flat Washer, M6	8
5	815303100	Spring Washer, M6	8
6	815222000	M8 x 20 mm Hex bolt (*)	4
7	815305500	Washer, Flat, M8	4
8	815122000	Nut, M8	4
9	814605600 (M09680B035)	Shock absorber	4
10	814979800	Plate, shock absorbers	4

(*) Optional, for installing the Fuel Truck Controller to the Shock Absorber assembly.

3-5.2. *Preliminary Procedures*

For installation of Fuel Truck Controller only, the following procedures should be performed in this order:

- Installing the Fuel Truck Controller on the support rails in driver’s cabin
- Running cables through the conduits to Fuel Truck Controller
- Wiring Fuel Truck Controller

For installation of Fuel Truck Controller with the Shock Absorber Assembly, the following procedures should be performed in this order:

- Installing Shock Absorbers Assembly on support flanges in the selected area on the truck
- Installing the Fuel Truck Controller on Shock Absorbers Assembly
- Running cables through the conduits to Fuel Truck Controller
- Wiring Fuel Truck Controller

3-5.3. *Fuel Truck Controller Installation in Driver' s Cabin*

To install the Fuel Truck Controller in the driver's cabin, proceed as follows:

a. Look for the support rail at the back of the driver's cabin in the fuel truck. There are usually two perpendicular rails.

b. Select the rail where installation is easier (less cluttered area).

c. Prepare beforehand two support flanges with two setting holes in each.

d. Connect the Fuel Truck Controller through the internal four holes or through the wall mount bracket to the support flanges.

e. Use dedicated drill screws for the installation to the support rails.

After the Fuel Truck Controller installation is completed, proceed with unit wiring according to the instructions provided in paragraph 3-7 on page 39.

3-5.4. *Determining the Spot Installation Fuel Truck Controller with Shock Absorber Assembly*

Proceed as follows:

1. Look for a support rail at the selected installation location in the fuel truck.
2. Select the rail where installation is easier (less cluttered area).
3. Prepare beforehand two support flanges with two setting holes in each.
4. Drill eight M6 Hex threads in the support flanges of the Shock Absorbers plate. See location and dimensions in Figure 3-2 and Figure 3-3 (10 in Table 3-1).
5. Drill four Hex threads in the rails for the support flanges.
6. Install the support flanges and secure with bolts, spring washers, and flat washers.

3-5.5. *Shock Absorbers Assembly - Installation Procedures*

The Shock Absorbers Assembly should be mounted on any flat surface on the truck. The rear wall of the shock absorber assembly includes eight holding holes for support screws.

Proceed as follows:

1. Locate the eight installation holes on the mounting flanges (see Figure 3-2 and Figure 3-3).
2. Check that eight M6 Hex threads in the installation flange have been drilled.
3. Set Shock Absorbers assembly (2 in Table 3-1) on the spot (see Figure 3-2) so that its installation holes fit with the threads.
4. Secure Shock Absorbers assembly with eight M6 Pan head bolts, M6 flat washers, and M6 spring washers (3, 4, 5 in Table 3-1).

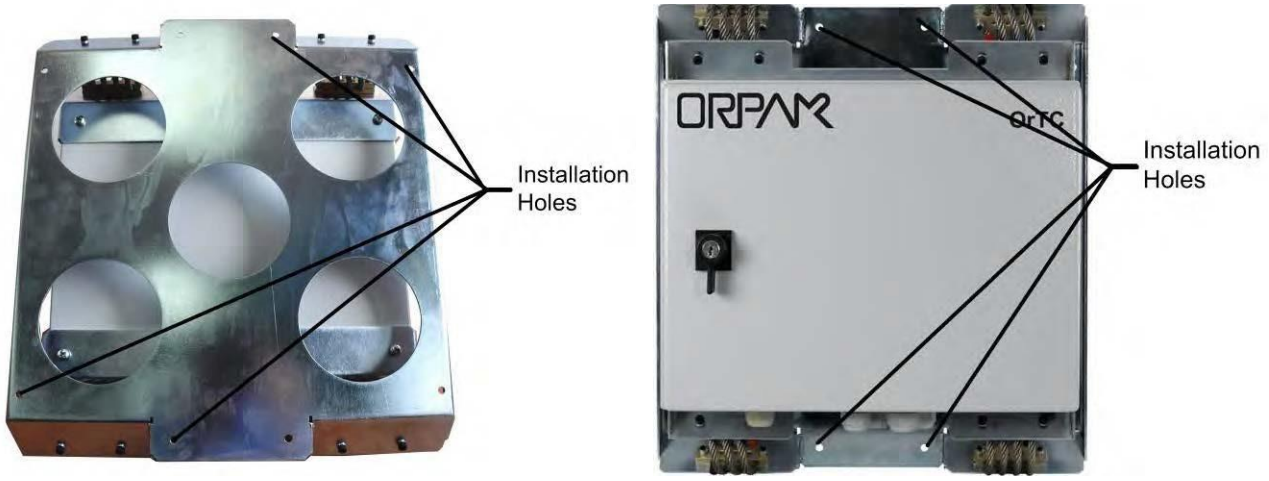

Figure 3-2. Shock Absorber Assembly – Installation Holes

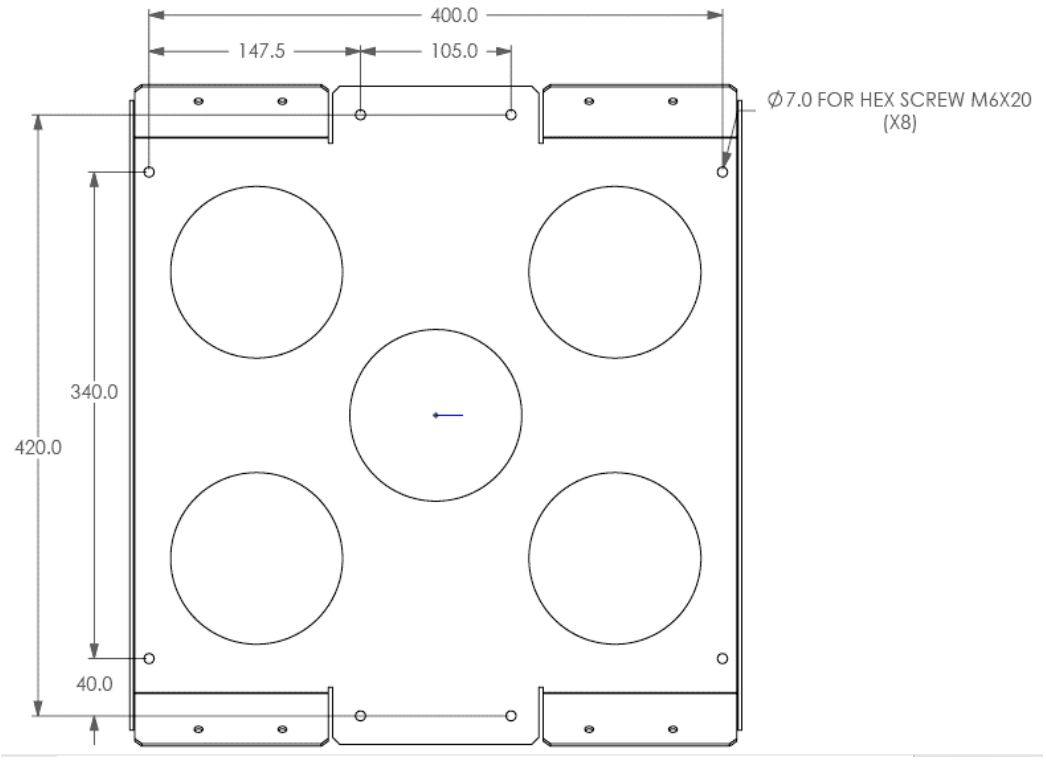

Figure 3-3. Fuel Truck Controller with Shock Absorber Assembly – Installation Holes

3-5.6. *Fuel Truck Controller Installation Assembly*

Fuel Truck Controller box is secured to Shock Absorber Assembly from within Fuel Truck Controller (see Figure 3-4).

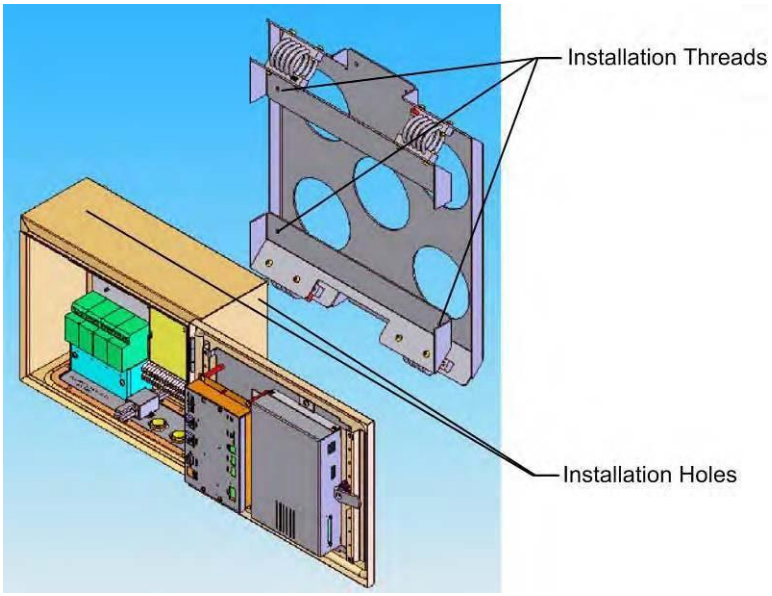

Figure 3-4. Installing Fuel Truck Controller on Shock Absorber Brackets – Installation Holes

Proceed as follows:

1. Install Fuel Truck Controller box on assembly on Shock Absorbers Assembly so that the shock absorbers fit into place.
2. Open Fuel Truck Controller box.
3. Secure Fuel Truck Controller box to Shock Absorbers Assembly with four M8 Hex bolts, four M8 flat washers, and four Nuts (6, 7, 8 in Table 3-1).
4. Perform Fuel Truck Controller wiring (refer to paragraph 3-7).
5. Lock Fuel Truck Controller box door with key.

3-6. *INSTALLATION OF FUEL TRUCK CONTROLLER WITH WALL MOUNT KIT*

3-6.1. *Installation Procedures*

Proceed as follows:

Note: If the wall mount is already installed, go to step 4.

1. Open Fuel Truck Controller enclosure.
2. Turn Fuel Truck Controller enclosure; you face its rear panel.
3. Attach to each support hole in the rear panel a wall bracket, with nut, M8 x 20 screw, and flat washer. Set the bracket so that they fit to the proper installation.
4. Set the Fuel Truck Controller enclosure (with wall brackets) in the spot and mark the four holes location from brackets for drilling. Make sure you select place that will allow you to open completely the Turn Fuel Truck Controller door.

3-7. *WIRING*

3-7.1. *General*

After completing the installation procedure, perform the wiring procedures. The wiring is performed in the Fuel Truck Controller Terminal Block only.

The wires should be pulled from the conduits, or in the opposite direction, from the Terminal Block to the devices in the fuel truck. Proceed as follows:

1. In accordance with the mapping, run cable conduits in accordance with the type of cables to the spot:
    - One conduit from the pump valve
    - One conduit from the pulser
    - One conduit from the nozzle
    - One conduit from power
2. Run the cables along the conduits to the openings in the box. Connect the wiring through optional glands or appropriate metal tubing. For UL/cUL listing, this product has only been evaluated for use without the optional glands.
3. Insert all power and communication cables through the openings in the bottom panel.

3-7.2. *Wiring Requirement*

For any type of pump and wire, prior to inserting a wire, proceed as follows:

1. Insert all wires with a terminal lug only.
2. Use the proper Terminal Crimper to attach the lug to the wire.
3. For UL Listing, The Terminal Lug must be a UL recognized components.

Figure 3-5. Terminal Lug

> ***TIP***
>
> Mark each cable at its both ends with a number or sign that will identify its functionality in the future.

3-7.3. *Wiring Procedures*

3-7.4. *General*

The wiring for Fuel Truck Controller is provided in two modes:

- Table 3-3 lists the wiring in the sequential order of the terminals. This table provides the signal name and a functional description of the signal.
- Figure 3-6 shows the wiring list for connection to the Terminal, as published in the Wiring Label added to the inner door (see Figure 3-7). The Wiring Label follows the physical location of the wires in the Terminal Block (see Figure 3-6).

3-7.5. *Mechanical Pump – Terminal Block - Pin-Out Connections*

The Fuel Truck Controller Terminal Block connections for a Mechanical Pump are listed in the following table.

Table 3-2. Fuel Truck Controller Terminal Block - Mechanical Pump – Connections Definition

Terminal No.	*Signal Name*	*Functional Description*
1	BARRIER 1 (-)	Connection to Safety Barrier for Nozzle 1 (1st wire)
2	BARRIER 2 (-)	Connection to Safety Barrier for Nozzle 2 (1st wire)
3	BARRIER 3 (-)	Connection to Safety Barrier for Nozzle 3 (1st wire)
4	BARRIER 4 (-)	Connection to Safety Barrier for Nozzle 4 (1st wire)
5	BARRIER 1 (+)	Connection to Safety Barrier for Nozzle 1 (2nd wire)
6	BARRIER 2 (+)	Connection to Safety Barrier for Nozzle 2 (2nd wire)
7	BARRIER 3 (+)	Connection to Safety Barrier for Nozzle 3 (2nd wire)
8	BARRIER 4 (+)	Connection to Safety Barrier for Nozzle 4 (2nd wire)

Terminal No.	*Signal Name*	*Functional Description*
9	TX-RS-232	Transmit (optional RS-232 connection)
10	GND-RS-232	RS-232 Ground (optional RS-232 connection)
11	RX-RS232	Receive (optional RS-232 connection)
12	RS-485 (+)	(+) RS-485 (optional equipment interface)
13	RS-485 (-)	(-) RS-485 (optional equipment interface)
14	RS-485 GND	(Gnd) RS-485 (optional equipment interface)
15	PULSER 1 P	Pulser Input – Nozzle 1
16	PULSER 2 P	Pulser Input – Nozzle 2
17	PULSER 3 P	Pulser Input – Nozzle 3
18	PULSER 4P	Pulser Input – Nozzle 4
19	GND PULSER 1	Nozzle Grounding – Nozzle 1
20	GND PULSER 2	Nozzle Grounding – Nozzle 2
21	GND PULSER 3	Nozzle Grounding – Nozzle 3
22	GND PULSER 4	Nozzle Grounding – Nozzle 4
23	+12 V 1 P	+12 VDC Output to Pulser – Nozzle 1
24	+12 V 2 P	+12 VDC Output to Pulser – Nozzle 2
25	+12 V 3 P	+12 VDC Output to Pulser – Nozzle 3
26	+12 V 4 P	+12 VDC Output to Pulser – Nozzle 4
27	IN USE 1 A	Handle Up - In Use signal input - Nozzle 1
28	IN USE 2 A	Handle Up - In Use signal input - Nozzle 2
29	IN USE 3 A	Handle Up - In Use signal input - Nozzle 3
30	IN USE 4 A	Handle Up - In Use signal input - Nozzle 4
31	IN USE 1 B(-)	Handle Up - In Use (dry contact) signal return - Nozzle 1
32	IN USE 2 B(-)	Handle Up - In Use (dry contact) signal return - Nozzle 2
33	IN USE 3 B(-)	Handle Up - In Use (dry contact) signal return - Nozzle 3
34	IN USE 4 B(-)	Handle Up - In Use (dry contact) signal return - Nozzle 4
35	LOAD 1	Pump control output - Nozzle 1
36	LOAD 2	Pump control output - Nozzle 2
37	LOAD 3	Pump control output - Nozzle 3
38	LOAD 4	Pump control output - Nozzle 4
39	LINE 1	Pump control 12/24 VDC Input - Nozzle 1
40	LINE 2	Pump control 12/24 VDC Input - Nozzle 2
41	LINE 3	Pump control 12/24 VDC Input - Nozzle 3
42	LINE 4	Pump control 12/24 VDC Input - Nozzle 4
43	+12 VDC up to +24 VDC	Input voltage
44	-12 VDC up to -24 VDC	Input voltage
45	GROUND IN	Main ground

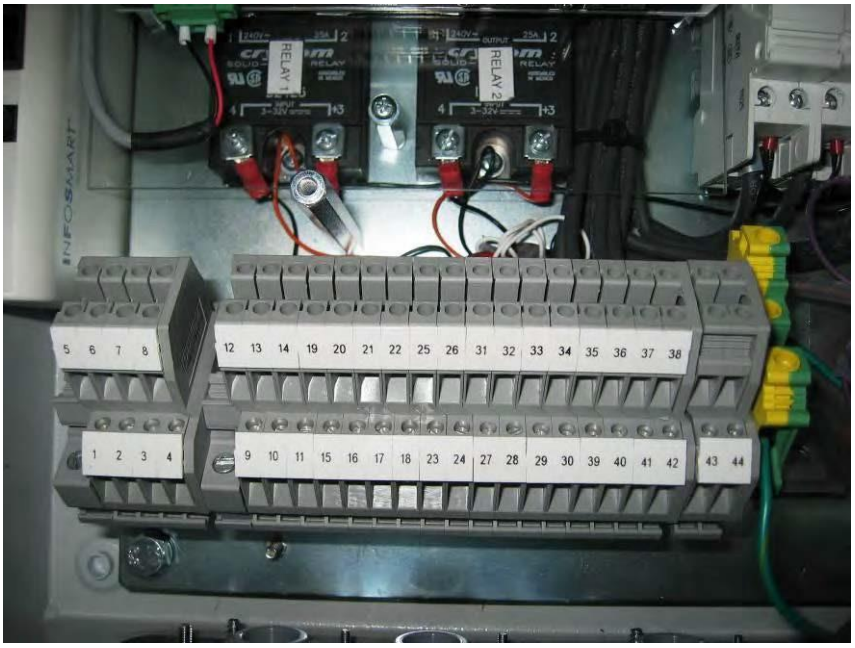

Figure 3-6. Terminal Block

TERMINAL BLOCK CONNECTION			
1	BARRIER 1 (-)	5	BARRIER 1 (+)
2	BARRIER 2 (-)	6	BARRIER 2 (+)
3	BARRIER 3 (-)	7	BARRIER 3 (+)
4	BARRIER 4 (-)	8	BARRIER 4 (+)
9	TX-RS232	12	RS485 (+)
10	GND-RS232	13	RS485 (-)
11	RX-RS232	14	RS485 GND
15	PULSER_1	19	GND_1_P
16	PULSER_2	20	GND_2_P
17	PULSER_3	21	GND_3_P
18	PULSER_4	22	GND_4_P
23	+12V_1_P	25	+12V_3_P
24	+12V_2_P	26	+12V_4_P
27	IN_USE_1_A(+)	31	IN_USE_1_B(-)
28	IN_USE_2_A(+)	32	IN_USE_2_B(-)
29	IN_USE_3_A(+)	33	IN_USE_3_B(-)
30	IN_USE_4_A(+)	34	IN_USE_4_B(-)
39	LINE_1	35	LOAD_1
40	LINE_2	36	LOAD_2
41	LINE_3	37	LOAD_3
42	LINE_4	38	LOAD_4
43	+24VDC or +12 VDC		
44	-24VDC or -12 VDC		
45	GROUND_IN		

Figure 3-7. Terminal Block – Mechanical Pump - Wiring List Label

Figure 3-8. Terminal Block – Mechanical Pump - Wiring List Label Installed

3-8. *PUMP - REQUIRED CONNECTIONS*

This paragraph describes the required wiring connections between the mechanical pump and the Fuel Truck Controller.

Pulse Wires:	The pump outputs pulses to the system by means of the Pulser unit installed inside the pump. The Pulse rate per volume (liter/gallon) is determined by the Pulser unit. It is programmed as a "factor" by the OrCU Controller.
In Use Wires:	Some applications require a trigger signal to the OrCU controller. The OrCU can operate with in-use signal to the MPI-C. This signal indicates that a transaction is about to be made. Once the transaction is initiated, the in-use switch must be turned off in order to end the transaction. Another option is not connecting the In Use wires. In that case, the OrCU Controller will start a transaction as soon as the nozzle antenna detects an authorization device.
Authorization Output Wires:	The dispenser requires an authorization signal from the Fuel Truck Controller to start a sale transaction. Without this authorization signal, the electric valve (or pump) will not open and the sale transaction will not begin. The Fuel Truck Controller sends the authorization signal in the form of an DC power signal to the valve. When the dispenser receives the authorization signal, fuel is flow.

NOTE

In cases where fuel truck meters are required, it is highly recommended to use Liquid Controls (LC) or Veeder-Root Meters.

3-9. *WIRING THE PERIPHERALS*

3-9.1. *Valve Wiring*

The MPI-C module in the Fuel Truck Controller activates the hose solenoid at the truck. Wire the solenoid as follows (see Figure 3-12):

- Connect two wires to the solenoid and run them through the pump conduit to the J-box.
- From the J-box, run the cables through the low power entrance opening.
- Connect wires (LOAD, LINE) to the Fuel Truck Controller terminal block.

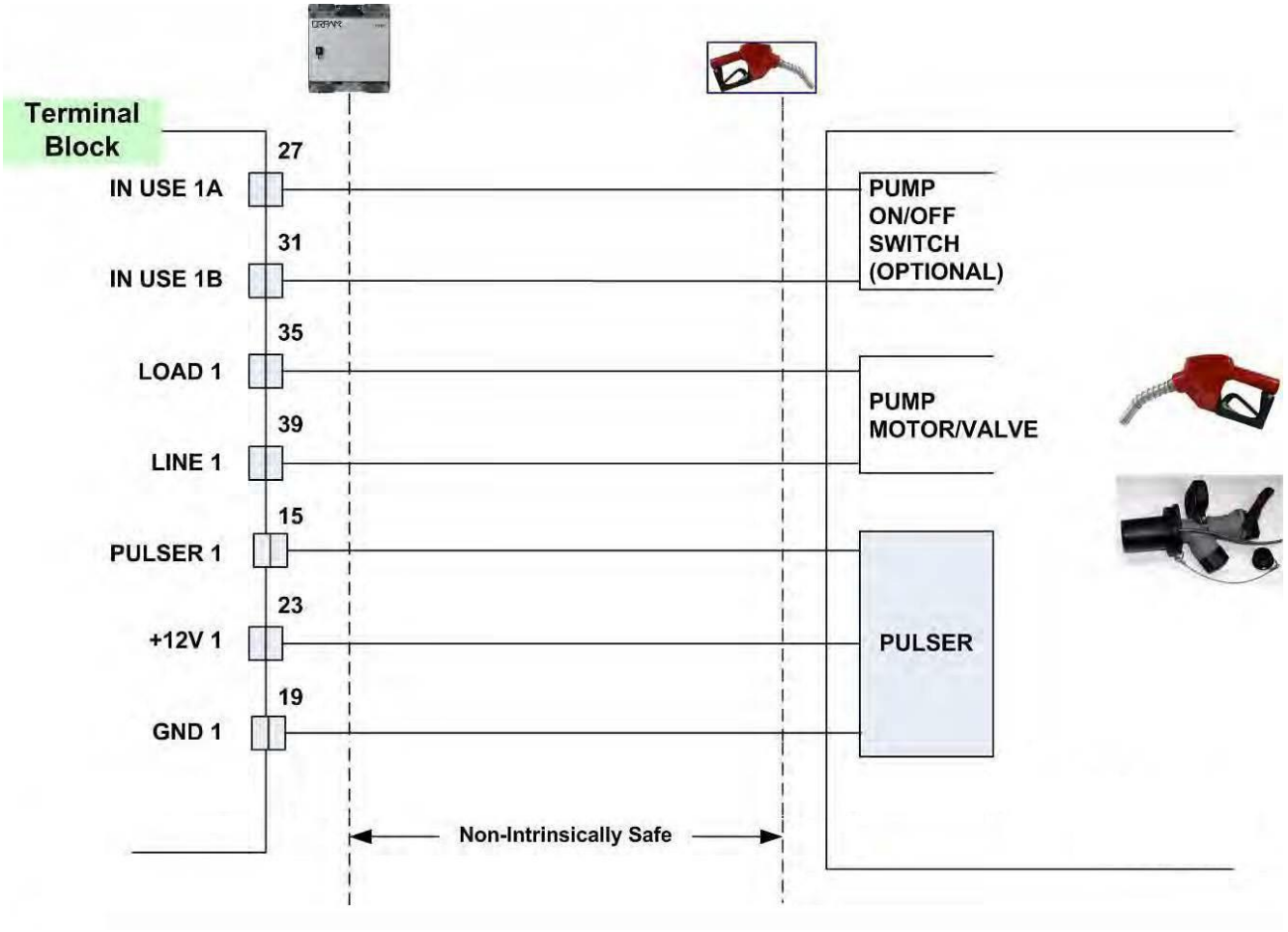

Figure 3-9. Fuel Truck Controller Mechanical Pump - Terminal Block Detailed Connections

3-9.2. *Pulser Wiring*

This paragraph describes the required wiring connections between the Pulser in the mechanical pump and the Fuel Truck Controller. Two types of pulser can be found in trucks:

- Electronic pulser
- Mechanical pulser

Connect the Fuel Truck Controller to the Pulser in accordance to its characteristics.

> ***NOTE***
>
> Pulser should be installed in accordance with the pulser manufacturer's instructions. Some pulsers do not have a barrier. In that case, you must add a pulser barrier. Barriers and nozzle rings are not provided with Fuel Truck Controller
>
> Barriers and nozzle rings must be installed on truck as UL Listed by Report Retrofit kits prior to the installation of the Fuel Truck Controller.

3-9.2.1. Electronic Pulser

- Three-Wire Pulser - requires an external power source in order to operate.

Figure 3-10 shows a schematic diagram of the connections between the Terminal Block and a three-wire Pulser.

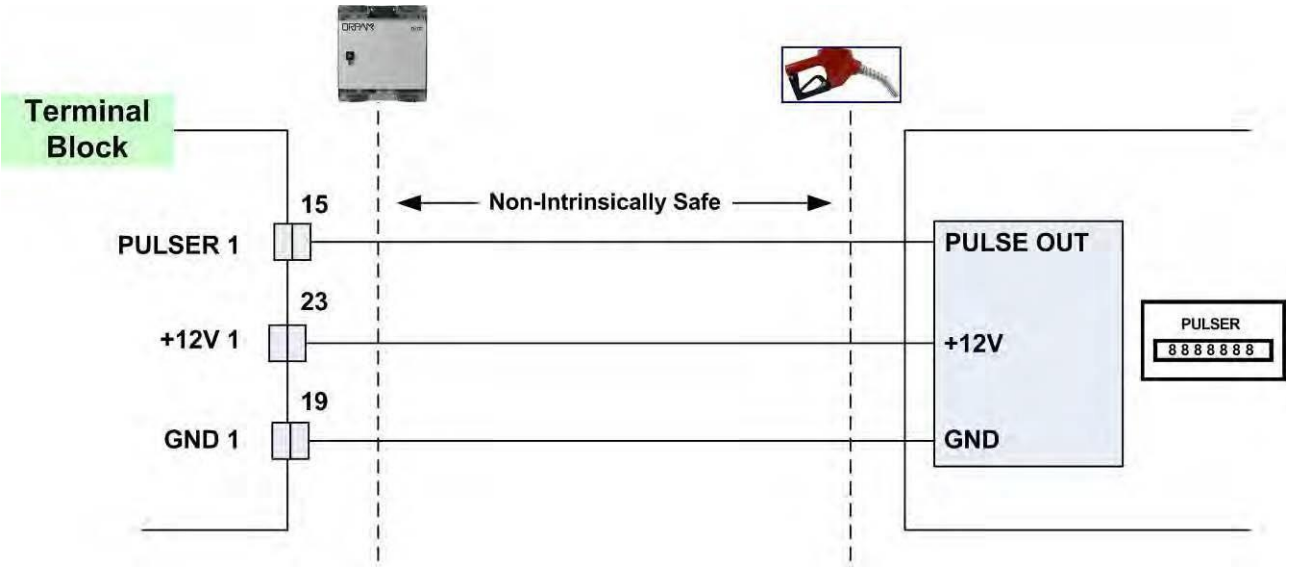

Figure 3-10. Terminal Block and 3-Wire Pulser – Wiring Connections

3-9.2.2. Mechanical Pulser

- Two-Wire Pulser, powered by the Fuel Truck Controller.

Figure 3-11 shows a schematic diagram of the connections between the Terminal Block and a two-wire Pulser.

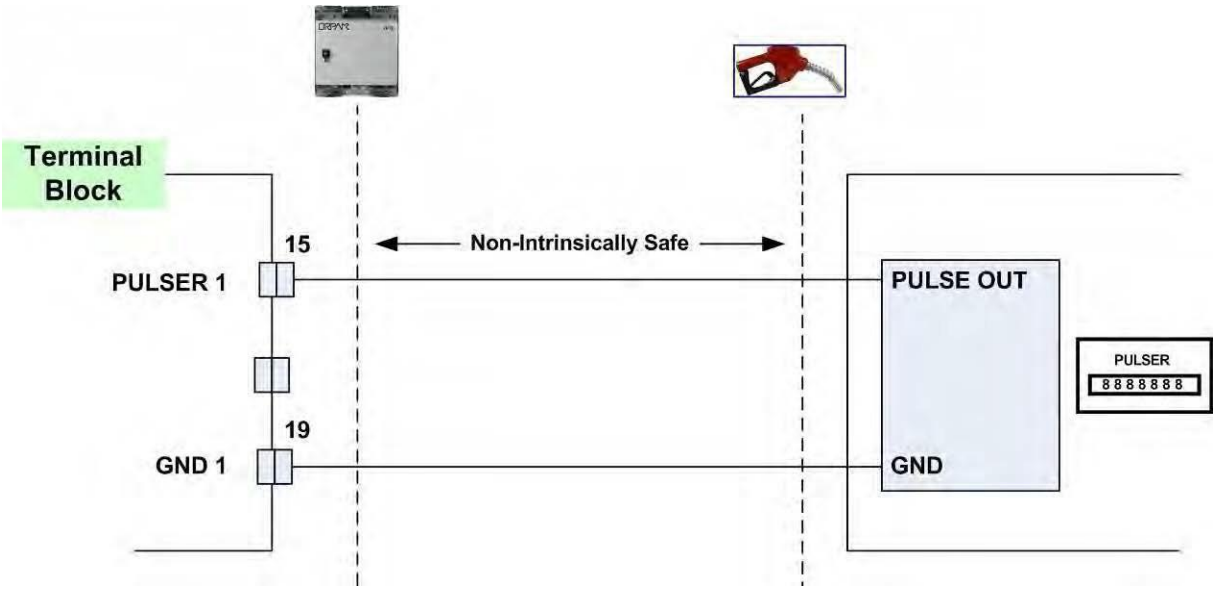

Figure 3-11. Terminal Block and 2-Wire Pulser – Wiring Connections

3-9.3. *In-Use Switch*

Some applications require a trigger signal to the controller. The OrCU can operate with in-use signal to the MPI. This signal indicates that a transaction is about to be made. Once the transaction is initiated, the in-use switch must be turned off in order to end the transaction.

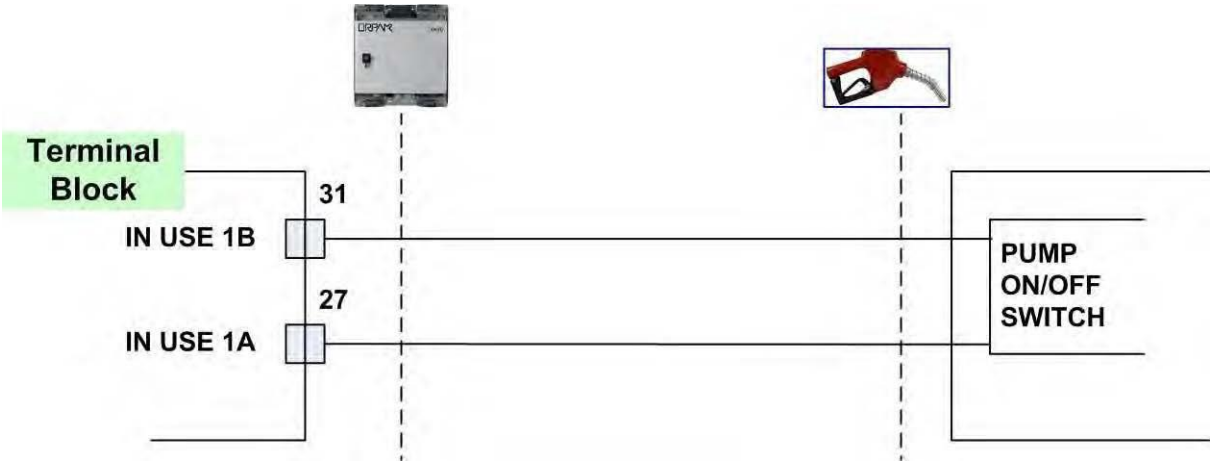

Figure 3-12. In-Use Switch

3-9.4. *Nozzle Installation*

FuelPoint PLUS devices like FuelOpass or data pass are detected through nozzle readers.

Refer to the Nozzle Installation Manual.

3-10. *ONGOING TRANSACTION INDICATION*

We recommend connecting a warning lamp (e.g. flashing light) in parallel with the valve control to indicate fueling in progress. This option enables the operator to see if the valve is authorized and open for refueling.

3-11. *POST-INSTALLATION CHECKLIST*

After completing the installation procedure, inspect carefully the connection between the Fuel Truck Controller and the external power mains and the data sources.

In particular, pay attention to the following issues:

- Correct wiring
    - Is all the wiring inserted in metal conduits?
    - Is the DC wiring inserted in a separate conduit?
    - Is the system/peripheral equipment powered on a separate dedicated breaker?
    - Is the wiring shielded properly?
    - Are the cables correctly routed in the truck?
    - Are the communication lines under the maximum allowable distance?
        - RS-485: 330 feet (100m)
        - Antenna wire:
            - 330 feet (100m) for VIU
            - 50 feet (15m) for FuelOpass
- Clean dirt and wire remnants

In case problems are detected after installation or during operation, repeat the post-installation checks listed above.

3-12. *FUEL TRUCK CONTROLLER SETUP*

For more information, refer to *MDE-4817 SiteOmat Setup Manual*.

SECTION 4
MAINTENANCE

4-1. *GENERAL*

This section provides general maintenance instructions for the Fuel Truck Controller as well as a comprehensive troubleshooting guide.

4-2. *TROUBLESHOOTING*

The next paragraphs provide a list of common pump/system problems that may be encountered when using the Fuel Truck Controller system as well as corrective action instructions, covering the following problems related to the system and its peripherals:

- Fuel Truck Controller (see paragraph 4-2.1)
- Communication to peripherals (see paragraph 4-2.2)

4-2.1. *Fuel Truck Controller Troubleshooting*

The Fuel Truck Controller troubleshooting procedure and consequent corrective actions are described in Table 4-1.

Table 4-1. Fuel Truck Controller Troubleshooting

Fault	**Probable Cause**	**Checks**	**Corrective Action**
System is down			
No communication OrCU LEDs are not lit	Fuel Truck Controller main switch or truck ignition switch are OFF		Turn main switch/ truck ignition switch ON. After power on, wait a few seconds for the Timer Relay to be connected.
	Defective fuses	Check the fuses 1. External fuse (6 Amp) 2. Internal fuse harness which is located between the Terminal block (TB 43) and Line Filter	Replace the fuses if blown.

Fault	Probable Cause	Checks	Corrective Action
No communication OrCU LEDs are not lit	No 12 VDC/24 VDC feed to the unit	Verify all input power connections: 1. Check cabling from J-box to the unit. 2. Verify that power cable is properly connected to unit terminal block. 3. Verify the Input & Output voltage of the DC2DC Converter. 4. Is 12 VDC/24 VDC measured at the power input terminal block?	Correct wiring problems if 12 VDC/24 VDC is not measured.
	Power failure	Does the unit shut down immediately after being turned on?	1. Check for shorts in the power line cable. 2. Check grounding.
	Circuit breaker is off	Is breaker OFF or tripped?	Turn breaker ON, if OFF.
		Is 12 VDC/24 VDC being switched through breaker?	Replace breaker if 12 VDC/24 VDC is not being switched.
		Is 12 VDC/24 VDC measured at the power input terminal block?	Correct wiring problems if 12 VDC/24 VDC is not measured.
		Does the breaker turn OFF immediately after being turned ON?	Check for loads or shorts in the power line.
	Internal fuse blown	Check the two pico fuses (red wires) at the bottom of the power supply using an ohmmeter.	Replace the fuse if it is blown.
	Power supply failure	Verify that green LED on power supply is lit.	1. Replace mini fuse. 2. Replace power supply.

Fault	Probable Cause	Checks	Corrective Action
System is down (continued)			
Mechanic pump does not refuel			
Pump does not supply fuel	Device is not allowed to refuel	1. Open the pump from SiteOmat Status screen. 2. Verify that the vehicle/device has no limitation in FHO setup.	Enable the device to refuel.
Pump does not supply fuel	Pump setup is incorrect	Check pump setup: • Pump server • Buses • Prices • Pulse rate	1. Set pump parameters. 2. Save and reload. 3. Check again.
	Faulty connection to pump	Check Control cables from Fuel Truck Controller to pump.	Make good electrical connection.
	8-port failure	Verify that Power LED is lit.	If it is OFF, use a voltmeter to check power supply to the unit: If power supply is OK, then replace the 8-port board. If power supply is faulty, replace the power supply.
		During Authorization, verify that Control red LED on MPI-C board is lit.	1. Replace MPI-C board. 2. Replace 8-port.
	Pump malfunction	Turn the Fuel Truck Controller bypass switch on, lift the nozzle and check that the pump supplies fuel.	If the problem persists: 1. Check Handle-On Switch. 2. Repair pump.
	Handle-on switch problem	Is the In Use red LED in MPI-C board lit when nozzle is lifted?	1. Check In Use cable and repair, if necessary. 2. Check Terminal wires and repair, if necessary. 3. Check the In Use Switch in the pump and repair, if necessary.

Fault	Probable Cause	Checks	Corrective Action
Pump is authorized but Call state is not detected (nozzle icon in SiteOmat Status screen does not display Call state)	Faulty in-use switch in pump	Power OFF the pump, using a ohmmeter measure the switch in ON and OFF states.	Replace pump switch in cases where no short was detected.
	Faulty connections	Check In Use cable Check In Use terminal block connections.	Make good electrical connection if faulty one exists.
	Faulty In Use terminal block		Replace In-use terminal block.
	Faulty MPI-C board	Verify that the Call red LED is lit when nozzle is lifted.	If the red LED is not lit, replace MPI-C board. If the LED is lit, the problem is external to the controller.
	Faulty 8-Port		Replace 8-Port.
Pump is authorized, pump motor is running, but no fuel is supplied	Faulty solenoid valve Faulty pump	Does the pump solenoid valve produce a clicking sound?	1. Replace valve. 2. Repair pump.
Payment device (card, key, tag, Fuel Ring) is not accepted	Communication fault between OrTR and SO	1. Check communication cable. 2. Check OrTR setup. 3. Check SO setup.	1. Replace com cable, if necessary. 2. Set OrTR parameters properly. 3. Set SO parameters properly.
	Communication fault between FHO and SO	1. Check connection path with FHO. 2. Verify that the station is available and synchronized with FHO in FHO Stations Status screen.	Repair communication between FHO and SO, providing a reliable communication line.

Fault	Probable Cause	Checks	Corrective Action
Payment device (card, key, tag, Fuel Ring) is not accepted	Device was not defined/incorrectly defined in FHO	1. Log in to FHO as Fleet manager. 2. Check that the device is defined. 3. Check device parameters. 4. Check that device rules does not limit refueling.	Define the device parameters in FHO properly.
	Device limit was passed	Verify that the device is within the limits of its rule.	For testing only, remove any rule associated to this device.
	Device was set as Driver	1. Log in to FHO and go to Devices Management. 2. Select the specific device and check if it was configured as “Driver”.	Change the device setting to “Vehicle”.
Payment device (card, key, tag, Fuel Ring) is not accepted	Device is blocked	1. Log in to FHO and go to Devices Management. 2. Check the status of the device in the Status column in the Devices grid (blocked/unblocked).	Change device status to “Unblocked”.
Pump is Authorized and refueling but volume remains zero			
Pump is refueling but volume remains zero	Pulse factor is zero	Check SO pump setup.	Change Pump Settings to correct the factor for the relevant pump.
	Faulty MPI-C board Faulty pulser	Disconnect the pulser and short the pulse-in wires to simulate pulses.	If pulses are received during refueling, replace pump pulser. If not, replace MPI-C board.

Fault	Probable Cause	Checks	Corrective Action
No control on refueling			
Pump is refueling without any control	Pump is in bypass	Verify that Fuel Truck Controller bypass switch is OFF.	Turn bypass switch OFF, if ON.
	Faulty SSR		Replace the relevant SSR unit inside the Fuel Truck Controller.
	If an external relay is used to control the pump/valve, it may be stuck due to a small current leak.		Add a snubber (capacitor + resistor) in parallel to relay input.

4-2.2. *Communication Troubleshooting*

The troubleshooting procedure for problems related to communication to peripherals and consequent corrective actions are described in Table 4-2.

Table 4-2. Communication Troubleshooting

Fault	Probable Cause	Checks	Corrective Action
No communication between FHO and SO controller			
No connection to the station from FHO Stations screen	Cabling issue	Visually inspect the network cable to LAN2.0	1. Verify that LAN2.0 Port LED is blinking. 2. Unplug the cable and plug it back in. 3. Replace LAN cable, if necessary. 4. If the cable is in good condition, contact the IT department to confirm that the router connected to the LAN cable is properly set. 5. Check the Controller network settings (IP addresses, mask, gateway, etc.).

Fault	Probable Cause	Checks	Corrective Action
No communication to the pumps (8-port CommVerter)			
“Warning” signs displayed for all pumps on the SiteOmat Status screen	Incorrect 8-port CommVerter setup	Check the physical connection of the 8- port CommVerter to the local network (5- port switch activity)	1. If no activity is detected on the LAN port connected to the 8-port CommVerter, replace the short Ethernet cable or/and change the LAN port to confirm normal operation.
All pumps are showing “warning” signs on the SiteOmat Status screen	Incorrect 8-port CommVerter setup	Check network connectivity by performing a “ping” command locally or remotely, through PuTTY application	2. Check the status of the LEDs on the 8-port (upper right corner of the board): the first and the third LED should be lit to confirm power and network connection, and second LED should blink to confirm network activity. The last two LEDs (from left to right) should be blinking constantly, to confirm communication with controller. 3. In cases where all LEDs are lit periodically (every 30 seconds) the unit is resetting due to connection loss to the controller. 4. Reset the IP and reconfigure the Pump Server (PS) in controller setup.
No communication to nozzles (Wireless Gateway)			
Can’t read the vehicles and/or no authorization at the pumps	1. No communication to Wireless Gateway 2. Incorrect nozzle readers setup	Check the physical connection of the Wireless Gateway to the local network (5- port switch). Check the Wireless Gateway network settings.	1. If no activity on the LAN port, check the cable and/or change the port on the 5-port switch. 2. Remove the top cover to access the Wireless Gateway and check the status of the LEDs.

Fault	Probable Cause	Checks	Corrective Action
Can’t read the vehicles and/or no authorization at the pumps		Check the programming of the WNRs.	3. Connect to the Wireless Gateway through the 9-pin serial port and open Hyperterminal (115200, 8, None, 1, None); then, reset the Wireless Gateway and follow the startup messages to find the IP address.

4-3. *CLEANING*

The Fuel Truck Controller itself as a standalone unit should be cleaned periodically at short intervals, due to the harsh environment where they operate.

CAUTION

DO NOT use any solvents such as thinner or benzene.

SECTION 5
GLOSSARY

5-1. *FUELOMAT GLOSSARY*

ComVerter	LAN/232/485/422/C.L./Tokheim Communication Converter
DataPass	Vehicle Data Transceiver
FHO	Fleet and Fuel Head Office
MPI	Mechanical Pump Interface
MPI-C	Mechanical Pumps Interface Card
NIS	Non-Intrinsically Safe
NR	Nozzle Reader (Wireless Nozzle Reader unit)
OrCU	Orpak embedded Controller Unit
OrCU 3000	Orpak site Controller Unit
OrIC	Orpak Island Controller
OrIT	Orpak Island Terminal
OrPT	Orpak/Outdoor Payment Terminal (display, Keyboard, key reader, magnetic card reader, LEDs, buzzer; install in fueling area)
FTC	Fuel Truck Controller
OrTR	Orpak Tag Reader
POS	Point of Sale
SAM	Security Application Module (security card in the VIT/UPI)
TLS	Tank Level System (measuring fuel tank level in station)
VBIS	Vehicle Bus Information System
VIS	Vehicle Information System
VIT	Vehicle Information Transceiver
VIU	Vehicle Identification Unit (VIU3/35/45)
WGT	Wireless Gateway Terminal

5-2. *COMMUNICATION GLOSSARY*

Access Point	An internetworking device that seamlessly connects wired and wireless networks together.
Ad Hoc	A peer-to-peer wireless network without Access Point. A group of wireless clients consistent with an independent wireless LAN.
Backbone	The core infrastructure of a network, it is the portion of the network that transports information from one central location to another central location. The information is then off-loaded onto a local system.
BSS	Basic Service Set. An Access Point associated with several wireless stations.
DES	Data Encryption Standard. LANs with high level of security. A method of data encryption.
DHCP	Dynamic Host Configuration Protocol.
ESS	Extended Service Set. More than one BSS can be configured as an Extended Service Set. An ESS is basically a roaming domain.
ESSID	Extended Service Set Identifier. The length of the ESSID information is between 0 and 32 octets. A zero-length identifier indicates the broadcast SSID.
Ethernet	A popular local area data communications network, originally developed by Xerox Corp., which accepts transmission from computers and terminals. Ethernet operates on 10/100 Mbps transmission rate over shielded coaxial cable or over shielded twisted pair telephone wire.
Infrastructure	An integrated wireless and wired LAN is called an infrastructure configuration.
LAN	Local Area Network
Roaming	A function that allows one to travel with a mobile end system (wireless LAN mobile station, for example) through the territory of a domain (an ESS, for example) while continuously connecting to the infrastructure.
TCP/IP	Communication protocol used in Ethernet/Internet.
Triple DES	A method of data encryption.
WAN	Wide Area Network
WEP	Wired Equivalent Privacy. The optional cryptographic confidentiality algorithm specified by IEEE 802.11 used to provide data confidentiality that is subjectively equivalent to the confidentiality of a wired LAN medium that does not employ cryptographic techniques to enhance privacy.
WG	Wireless Gateway
RAS	Remote Access Services

APPENDIX A
WIRING DIAGRAM

This appendix provides the wiring diagram of the Fuel Truck Controller.

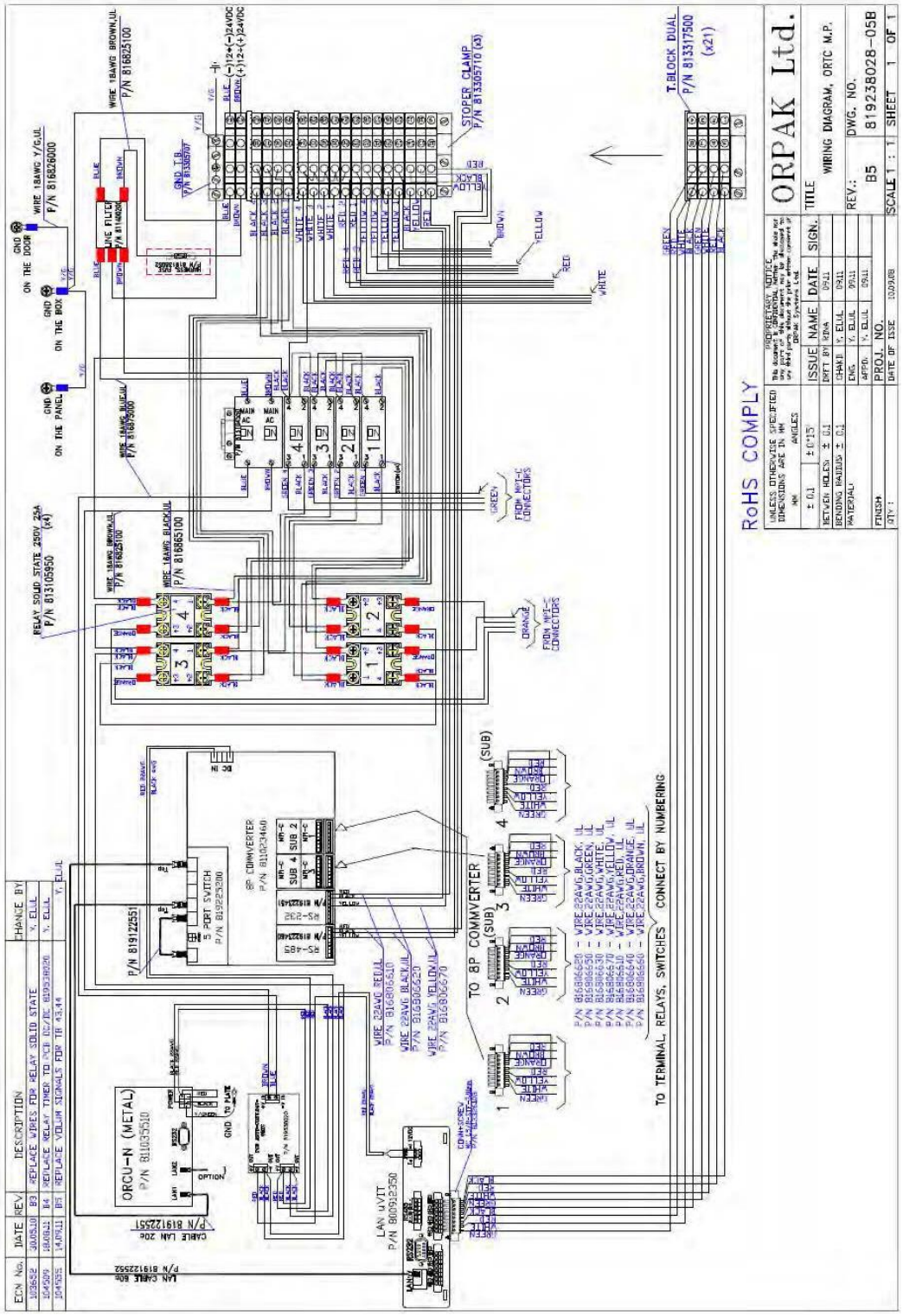

APPENDIX B
SITE SURVEY FORM - EXAMPLE

Date: ____/____/_____

Prepared by: _____

E-mail: _____@_____

Phone: _____

Gas Station Identification:

Company name: _____

Address: _____

Contact person: _____

Phone: _____ Mobile phone: _____

Truck Data:

Station name: _____

Site Name: _____

Power Supply: ☐ 12 VDC ☐ 24 VDC ☐ Other_____

Number of nozzles
(To be connected to Fuel Truck Controller): _____

Number of Authorizers required: _____

Hose on: ☐ Reel ☐ Long hose ☐ Other_____(photo required)

Reel has continued connectivity (brushes) ☐ Yes ☐ No

Electronic Pulser installed: ☐ Yes ☐ No

If Pulser installed, model? _____

Air Slip needed: ☐ Yes ☐ No

ON/OFF switch available: ☐ Yes ☐ No

Mini Fuel Truck Controller Printer required: ☐ Yes ☐ No

Preferred mounting location
for Fuel Truck Controller box: _____

Data Download Method

Cellular modem installed: ☐ Yes ☐ No

Cellular modem model: _____

Cellular modem
SIM Data Number: _____

WiFi connectivity: ☐ Yes ☐ No

Nozzle Equipment

Hose Diameter: ☐ 3/4” ☐ 1” ☐ Other_____

Hose Length: _____

Hose Thread: ☐ Male ☐ Female

Nozzle/Hose Thread: ☐ Inch ☐ Millimeter ☐ BSP ☐ NPT

Manufacturer: _____

Model: _____.

Diameter of nozzle spout: _____

Break Away: ☐ Yes ☐ No ☐ Location on the hose:_____

Vapor Recovery: ☐ Yes ☐ No

Vehicle Devices to Be Used

VIU: ☐ Yes ☐ No

FuelOpass: ☐ Yes ☐ No

Contactless TAG: ☐ Yes ☐ No

Site Inspection

Provide drawings and/or photos of the site - Pay attention to the following features:

Distances _____

Location of:

Pumps _____

Reel _____

Nozzles _____

Valves _____

Pulsers _____

Cabinet _____

Miscellaneous

Color schemes and Graphics that may affect the appearance of our equipment on the truck:

Description _____