Manual No: **577014-335** Revision: **D**

VaporTEK - VTEK3 Controller Board

Installation, Setup and Troubleshooting Manual

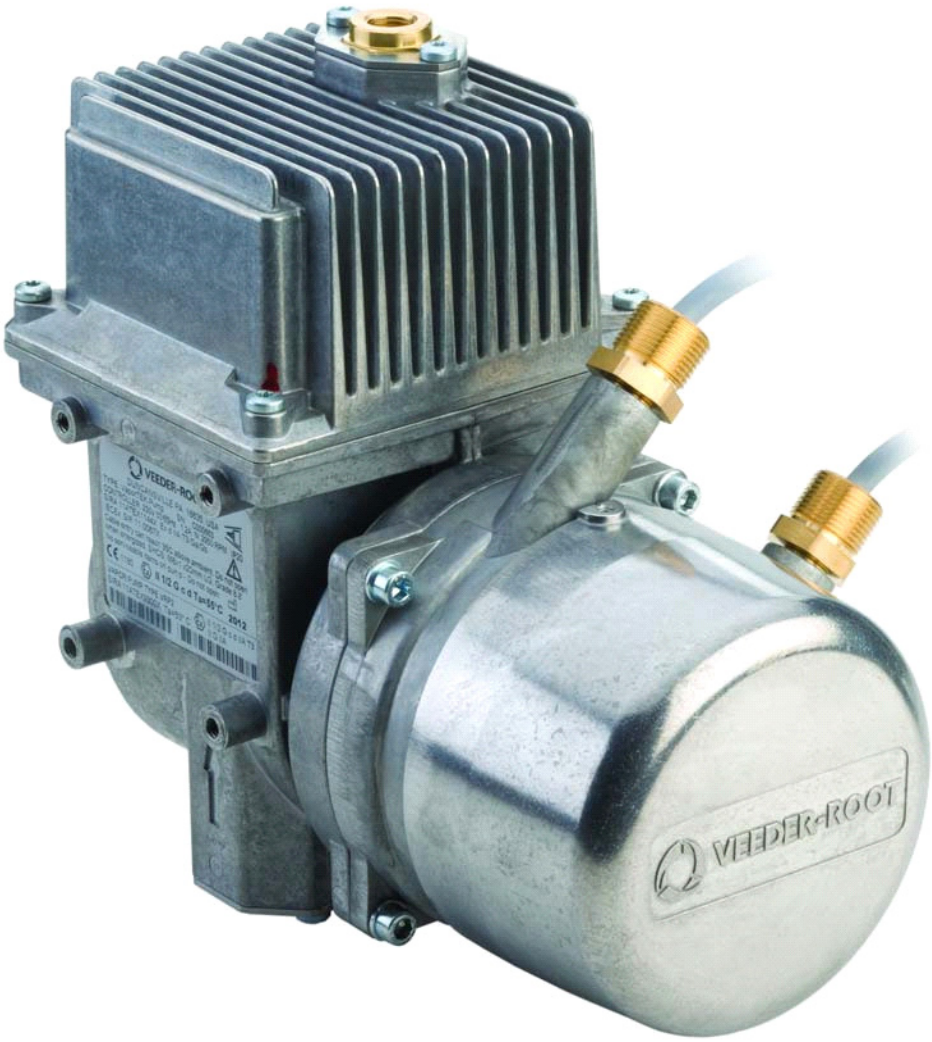

VEEDER-ROOT

Notice

Veeder-Root makes no warranty of any kind with regard to this publication, including, but not limited to, the implied warranties of merchantability and fitness for a particular purpose.

Veeder-Root shall not be liable for errors contained herein or for incidental or consequential damages in connection with the furnishing, performance, or use of this publication.

Veeder-Root reserves the right to change system options or features, or the information contained in this publication.

 Contact TLS Systems Technical Support for additional troubleshooting information at 800-323-1799.

DAMAGE CLAIMS / LOST EQUIPMENT

Thoroughly examine all components and units as soon as they are received. If any cartons are damaged or missing, write a complete and detailed description of the damage or shortage on the face of the freight bill. The carrier's agent must verify the inspection and sign the description. Refuse only the damaged product, not the entire shipment.

Veeder-Root must be notified of any damages and/or shortages within 30 days of receipt of the shipment, as stated in our Terms and Conditions.

VEEDER-ROOT'S PREFERRED CARRIER

1. Contact Veeder-Root Customer Service at 800-873-3313 with the specific part numbers and quantities that were missing or received damaged.
2. Fax signed Bill of Lading (BOL) to Veeder-Root Customer Service at 800-234-5350.
3. Veeder-Root will file the claim with the carrier and replace the damaged/missing product at no charge to the customer. Customer Service will work with production facility to have the replacement product shipped as soon as possible.

CUSTOMER'S PREFERRED CARRIER

1. It is the customer's responsibility to file a claim with their carrier.
2. Customer may submit a replacement purchase order. Customer is responsible for all charges and freight associated with replacement order. Customer Service will work with production facility to have the replacement product shipped as soon as possible.
3. If "lost" equipment is delivered at a later date and is not needed, Veeder-Root will allow a Return to Stock without a restocking fee.
4. Veeder-Root will NOT be responsible for any compensation when a customer chooses their own carrier.

RETURN SHIPPING

For the parts return procedure, please follow the appropriate instructions in the "General Returned Goods Policy" pages in the "Policies and Literature" section of the Veeder-Root **North American Environmental Products** price list. Veeder-Root will not accept any return product without a Return Goods Authorization (RGA) number clearly printed on the outside of the package.

Introduction

Installation

Wiring Schematics

Communication Setup - VaporTEK Interface

VaporTEK Calibration

Figures

Introduction

This manual contains installation and operation instructions for Veeder-Root's VaporTEK. VaporTEK is a dispenser based, Stage II vapor recovery system that collects vapor during vehicle fueling and returns vapor to the underground storage tank (UST). Each VaporTEK system is designed to accommodate two active fueling points simultaneously.

VaporTEK System Basic Components:

- VaporTEK Pump
- VaporTEK-3 Controller Board

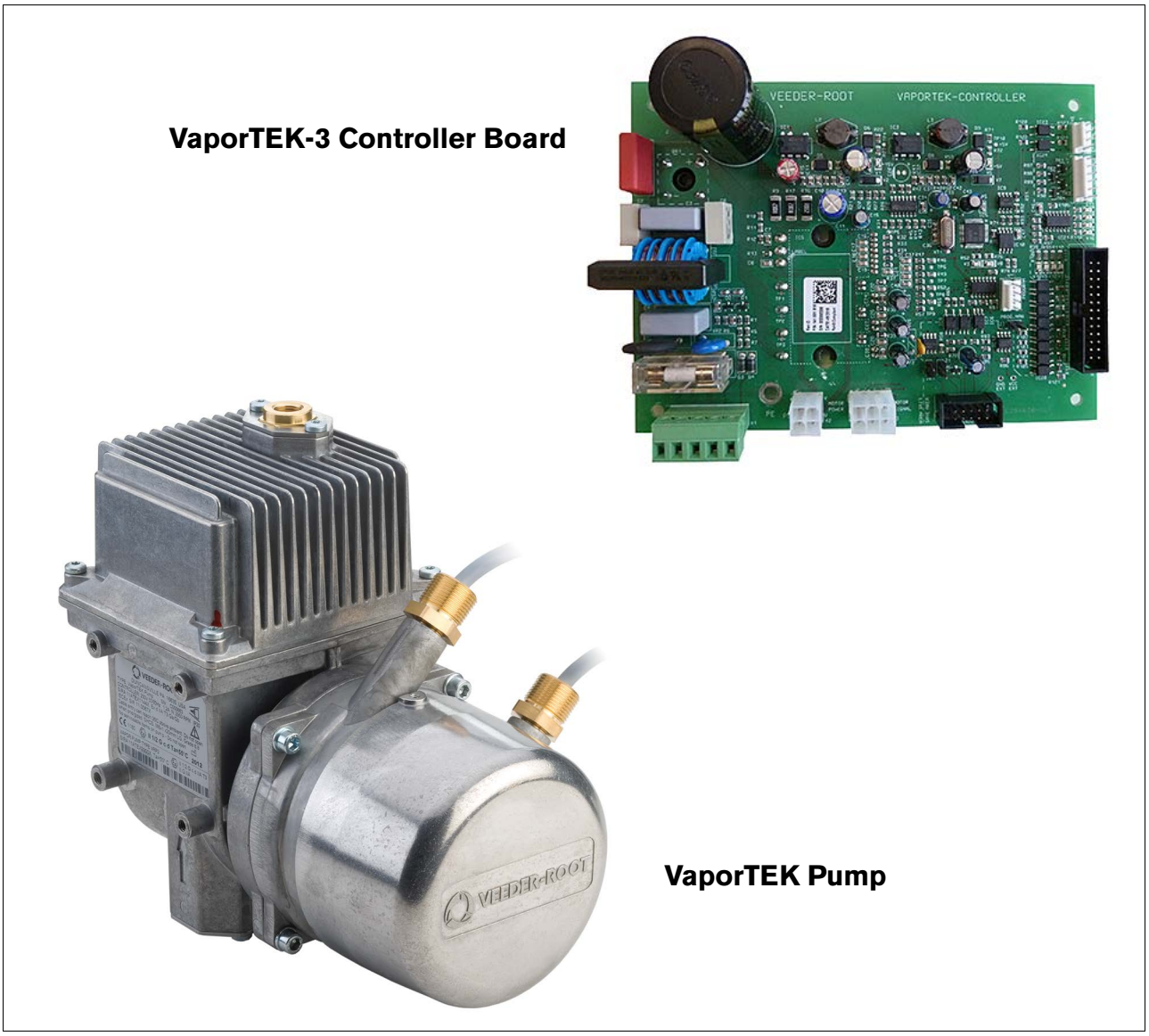

Figure 1. VaporTEK System Basic Components

Auxiliary Components supported by the VaporTEK System:

- VaporTEK Pulse Interface Adapter Board (Dispenser based Design)
- VaporTEK Valve Adapter Board (for VaporTEK Enhanced Systems)

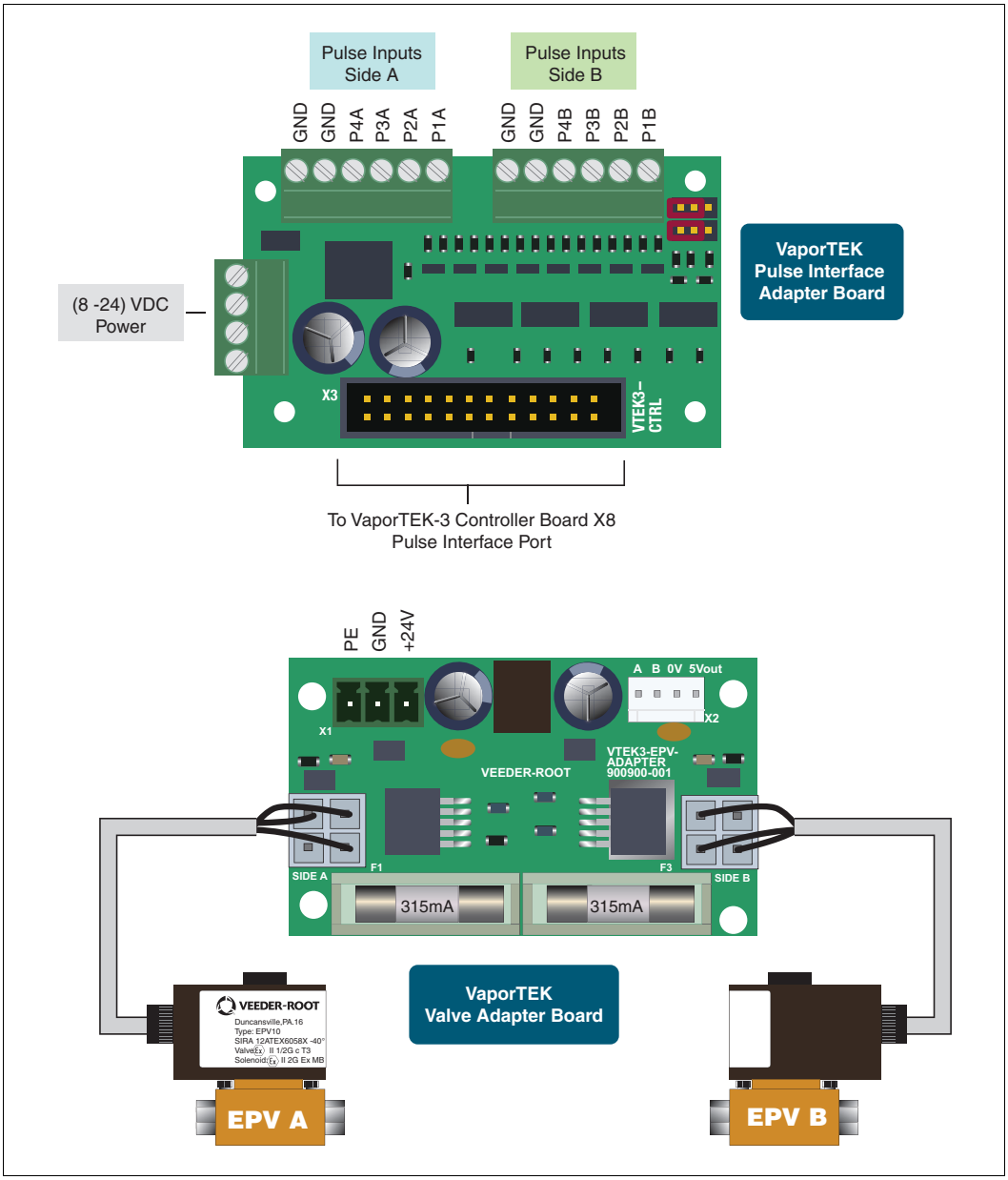

Figure 2. Auxiliary VaporTEK System Components

Contractor Certification Requirements

eeder-Root requires the following minimum training certifications for contractors who will install and setup the equipment discussed in this manual:

Service Technician Certification (Previously known as Level 2/3): Contractors holding valid Technician Certifications are approved to perform installation checkout, startup, programming and operations training, system tests, troubleshooting and servicing for all Veeder-Root Series Tank Monitoring Systems, including Line Leak Detection.

TLS-3xx Technician Certification: Contractors holding valid TLS-350 Technician Certifications are approved to perform installation checkout, startup, programming and operations training, troubleshooting and servicing for all Veeder-Root TLS-300 or TLS-350 Series Tank Monitoring Systems, including Line Leak Detection and associated accessories.

TLS-4xx Technician Certification: Contractors holding valid TLS-450 Technician Certifications are approved to perform installation checkout, startup, programming and operations training, troubleshooting and servicing for all Veeder-Root TLS-450 Series Tank Monitoring Systems, including Line Leak Detection and associated accessories.

All service personal on site must comply with all recommended safety practices identified by OSHA and your employer.

Review and comply with all the safety warnings in this and any related documents, and any other Federal, State or Local requirements.

Warranty Registrations may only be submitted by selected Distributors.

Related Manuals

577014-018	Encore 500 Stage II Vapor Recovery Retrofit/Commissioning Installation and Start-Up Instructions
577013-988	MPV 10 Valve Installation and Maintenance Manual
577013-985	AVRN Vacuum Assist Nozzle Installation and Maintenance Manual
MDE-5064	Encore 500 VaporTEK Service and Troubleshooting Manual

Safety Precautions

The following safety symbols may be used throughout this manual to alert you to important safety hazards and precautions.

	**EXPLOSIVE** Fuels and their vapors are extremely explosive if ignited.		**FLAMMABLE** Fuels and their vapors are extremely flammable.
	**ELECTRICITY** High voltage exists in, and is supplied to, the device. A potential shock hazard exists.		**TURN POWER OFF** Live power to a device creates a potential shock hazard. Turn Off power to the device and associated accessories when servicing the unit.
	**NO OPEN FLAMES** Open flames from matches, lighters, welding torches, etc. can ignite fuels and their vapors.		**NO SMOKING** Sparks and embers from burning cigarettes or pipes can ignite fuels and their vapors.
	**NO VEHICLES** Moving vehicles in the area during service can create a potential for personal injury to you or others. Sparks from starting vehicles can ignite fuels and their vapors.		**USE SAFETY BARRICADES** Unauthorized people or vehicles in the work area are dangerous. Always use safety cones or barricades, safety tape, and your vehicle to block the work area.
	**CLEAN WORK AREA** Dispose of fuel soaked materials properly and not into trash barrels that may be used by customers.		**INJURY TO EYES AND SKIN** Unauthorized people or vehicles in the work area are dangerous. Always use safety cones or barricades, safety tape, and your vehicle to block the work area.
	**WARNING** Heed the adjacent instructions to avoid damage to equipment, property, environment or personal injury.		**READ ALL RELATED MANUALS** Knowledge of all related procedures before you begin work is important. Read and understand all manuals thoroughly. If you do not understand a procedure, ask someone who does

Safety Warnings

⚠ WARNING

This product is to be installed and operated in the highly combustible environment of a gasoline dispenser where flammable liquids and explosive vapors may be present.

FAILURE TO COMPLY WITH THE FOLLOWING WARNINGS AND SAFETY PRECAUTIONS COULD CAUSE DAMAGE TO PROPERTY, ENVIRONMENT, RESULTING IN SERIOUS INJURY OR DEATH.

The following hazards exist:

1. **Electrical shock resulting in serious injury or death may result if power is on during installation and the device is improperly installed.**
2. **Product leakage could cause severe environmental damage or explosion resulting in death, serious personal injury, property loss and equipment damage.**

Observe the following precautions:

1. **Read and follow all instructions in this manual, including all safety warnings before installing this equipment.**
2. **Before installing this device, turn Off, tag/lock out power to the affected dispenser, including submersible pumps.**
3. **Evacuate of all unauthorized persons and vehicles from the work area.**
4. **To protect yourself and others from being struck by vehicles, block off your work area with cones, safety tape or barricades during installation or service.**
5. **Do not operate this equipment in hazardous locations with any securing screws or covers removed. Comply with all applicable codes including: the National Electrical Code; federal, state, and local codes; and other applicable safety codes.**

Veeder-Root maintains a continuous process of product development and therefore product specifications may not be as described in this manual. Please contact the Veeder-Root office nearest you, or visit our website at *www.veeder.com* for information on new or updated products. Changes affecting products or procedures described in this manual will be reported in subsequent revisions.

Veeder-Root has taken every care in the compilation of this manual; however, it is the installers' responsibility to take every precaution to safeguard themselves and others. Every person working with Veeder-Root equipment is expected to take every safety precaution possible and to have read this manual.

NOTICE **Deviation from the specifications contained in this manual can result in rework, delays in system installation and additional installation charges.**

Contractors are advised to contact their nearest Veeder-Root office where local conditions may preclude using the specifications contained in this manual.

VaporTEK Configurations

VaporTEK is available in four different configurations depending on required A/L (air to liquid) performance, compatibility with localized A/L monitoring requirements and performance A/L thresholds.

- **VaporTEK Basic** - Constant Speed System controlled High Voltage Signals M1/M2, (No A/L – Control)
- **VaporTEK Plus** - Variable Speed System, A/L controlled by fuel flow (electronic signal is required)
- **VaporTEK Enhanced** - Constant Speed System controlled High Voltage Signals M1/M2, (MPV A/L - control)
- **VaporTEK Ultra** - Variable Speed System, A/L equalized by EPV (electronic signal is required)

VaporTEK Pump Certifications & Markings

Safety Certification

Product	ATEX Directive 2014/34/EU	IECEx	UKEX SI 2016 No. 1107
VaporTEK Pump	CML 18ATEX6243X	N/A	CML 21UKEX9398X
VaporTEK Controller	N/A	N/A	N/A
VRP2 Pump	CML 18ATEX1245X	N/A	N/A
VRM2 Motor	CML 18ATEX1244X	IECEx CML 18.0116X	N/A

Certificates can be obtained upon request. The IECEx certificates can be obtained Online at: *http://iecex.iec.ch/*

ATEX certificates are issued by the Notified Body CML B.V. to latest EU harmonised standards at the time of certification.

UK certificates are issued by the Approved Body Eurofins E&E CML Limited to latest UK designated standards at the time of certification.

Hazardous Area Installation Instructions

1. VaporTEK Pump may be used with flammable gases and vapors with apparatus group II and temperature class T3.
2. VaporTEK Pump is certified for maximum operating ambient temperature of +55°C.
3. The VaporTEK Pump is equipped with a temperature cut-off switch for thermal protection.
4. The VaporTEK Pump assembly certificate number has an “X” suffix, indicating that special conditions are for safe use application:

   When the vapor recovery pump is used as a flame arrester in vapor recovery pipes and a separate flame arrester is not fitted, the following maximum hose and pipe lengths are permitted between the filler nozzle and the vacuum pump according to EN13463-1 standard:

   - Vapor recovery hose with an inside diameter ≤ 10mm in the coaxial hose ≤ 6m, or,
   - Coaxial hose ≤ 6m with an outside diameter ≤ 38mm and fitted together with a downstream pipeline DN 15 (G 1/2) ≤ 3m.

   In addition, the tanks mentioned in Test Reports PTB Ex 05-45017 and PTB Ex 05-45027 may be installed in the DN 15 (G 1/2) pipeline at a distance of between 0.3m and 2.5m in front of the VRP2 vapor recovery pump. The pipeline between hose and tank shall have a minimum length of 0.5m.

   The ambient temperature and the temperature of the fuel vapor/air mixture taken in shall remain within the temperature range -20°C to +55°C at the intake end.

   Flame paths shall not be repaired or reworked.

Equipment Marking

Product	ATEX/UKEX
VaporTEK Pump	Ex II 1/2 G Ex h IIA T3 Ga / Ex db IIA T3 Gb Ta=55°C

Material Compatibility With Constituents Of The Potentially Explosive Atmosphere

The VaporTEK Pump is suitable for temporary exposure to petrol and associated vapors, ethanol blended fuels, diesel, biodiesels, LPG and associated vapors, water with minimal salt content, mild cleaning agents, AdBlue anticipated vehicle exhaust emissions, and small traces of engine oil or other lubricants which could be transferred by hand contact. The pumping unit is suitable for permanent internal exposure to vapors of petrol, ethanol blended fuels and temporary exposure to liquid fuel.

The equipment is not suitable for use where external surfaces may come into regular exposure to substances which are incompatible with any of the following materials:

- Aluminium and aluminium alloys, brass alloys, zinc plated steel, carbon/alloy steel, nitrile rubber.

TUV Certification

Product	Test Standard	TUV Certificate Number	Hose	Nozzle
VaporTEK Basic	VDI 4205	A/L 13.1	Goodyear Flex Steel	Veeder-Root AVRN
VaporTEK Plus	VDI 4205	85-13.2	Goodyear Flex Steel	Veeder-Root AVRN
	EN16321-1:2013	VR2-1504-112 EU	Elaflex Slimline 21/8	Elaflex ZVA Slimline 2 GR
VaporTEK Enhanced	VDI 4205	85.13.3	Goodyear Flex Steel	Veeder-Root AVRN
VaporTEK Ultra	VDI 4205	85.13.4	Goodyear Flex Steel	Veeder-Root AVRN

VaporTEK Kits

VaporTEK Pump, ATEX/IECEX/ITRI Kit - P/N 900612-001

	Quantity	Description
	1	VaporTEK PUMP/MOTOR ASM, P/N 900621-001
	1	VaporTEK DATASHEET, P/N 576047-180

VaporTEK Pump, ATEX/IECEX Kit - P/N 900882-001 (Salzkotten)

	Quantity	Description
	1	VaporTEK PUMP/MOTOR ASM, P/N 900882-001
	1	577014-132 Pump Field Replacement Manual

VaporTEK Pump, PCEC Kit - P/N 900869-001 (China PCEC Version)

	Quantity	Description
	1	VaporTEK PUMP/MOTOR ASM, P/N 900868-001
	1	VaporTEK Pump Install Manual Chinese 577014-090

VaporTEK Pump, UL Kit - P/N 900612-002

	Quantity	Description
	1	VaporTEK PUMP/MOTOR ASM, P/N 900621-002

VaporTEK-3 Controller Board Kit - P/N 900895-001

Item	Quantity	Description
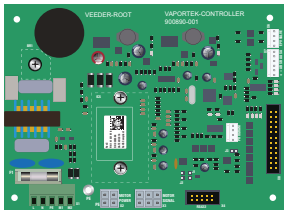	1	VaporTEK-3 Controller Board, P/N – SK 141 031 916; P/N – VR 900890-001
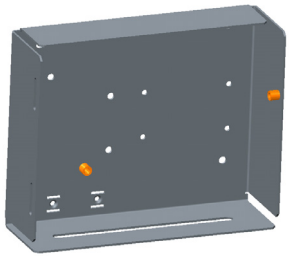	1	VaporTEK-3 Controller board Mounting BRKT ASM, P/N 900892-001
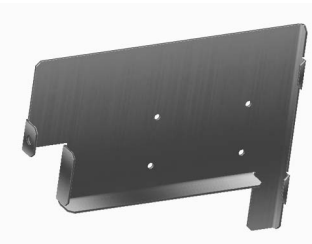	1	VaporTEK-3 Controller board MTG Cover, P/N 900893--001
	1	Label, VTEK-3 Controller KIT, P/N 900853-001
	4	Snap Lock Standoff P/N 579197-001
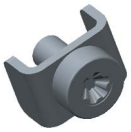	2	Saddle Clamp – T15 #8 SPC, P/N 576010-834

Item	Quantity	Description
	3	Screw, PH, Phillips, M3-0.5 X 12LG, P/N 579291-001
	3	Nut, Hex, M3-05, Class 8, Steel, Zinc Plated, Tooth Washer P/N 579201-001
	2	Hex Nut, M6 X 1, Steel, P/N 579082-001
	2	SHCS, M6X1 X 20MM LG, Grade 8.8; P/N 579281-001
	2	Screw, PH, Phillips, M4-0.7 X 12LG/Lock washer M4; P/N 579198-001
	1	18AWG, 3 Conductor Power Cable with Connector – 3 FT Long, P/N 900651-001

VTEK-3 Pulse Interface Adapter Kit - P/N 900905-001

	Quantity	Description
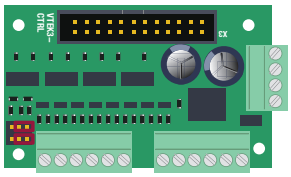	1	VTEK-3 Pulse Interface Adapter Board P/N –SK 141 086 464; P/N -VR 900900-001
	4	Support Post, Dual Locking M4.0 X 6MM LG (Plastic), P/N 579081-001
	1	26 Pin Flat Ribbon cable; P/N 579292-001
	1	18AWG, 2 Conductor Power Cable with Connector – 4 FT Long, P/N 900652-001
	1	24AWG, 8 Conductor Signal Cables – 3 FT Long, P/N 900643-001

VaporTEK High Voltage Relay Kit - P/N 900664-001

	Quantity	Description
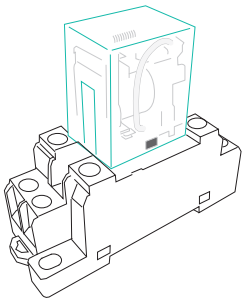	1	High Voltage Relay

VaporTEK Valve Adapter Interface Kit - P/N 900XXX-001

	Quantity	Description
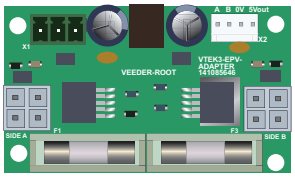	1	VaporTEK – Valve Adapter Board P/N –SK 141 085 646
	4	Support Post, Dual Locking M4.0 X 6MM LG (Plastic), P/N 579081-001
	1	Cable, 4 wire
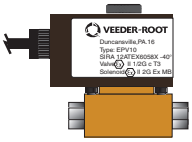	2	EPV10
	1	Cable 24VDC

VaporTEK Pump Characteristics

1. The VaporTEK Pump is driven by the VaporTEK Controller.
2. The VaporTEK Pump has integrated flame arrestors at the inlet and outlet ports that prevent flame transmission.
3. The inlet/outlet ports have standard G ¼" female threads (ISO – 228-1).

WARNING! DO NOT remove the flame arrestors. DO NOT install piping which can stress the pump housing.

4. Vapor flow is from the nozzle through the vapor pump to the UST (See Figure 3 for flow direction).
5. The following conditions must apply according to EN13463-1 for the maximum pipe and hose lengths between the nozzle and the VaporTEK Pump.
   a. An inner diameter ≤10mm in the coaxial hose of length ≤6m, OR
   b. Coaxial hose of length ≤ 6m with an outer diameter ≤38mm together with a DN15 pipe (G ½"), length ≤ 3m.

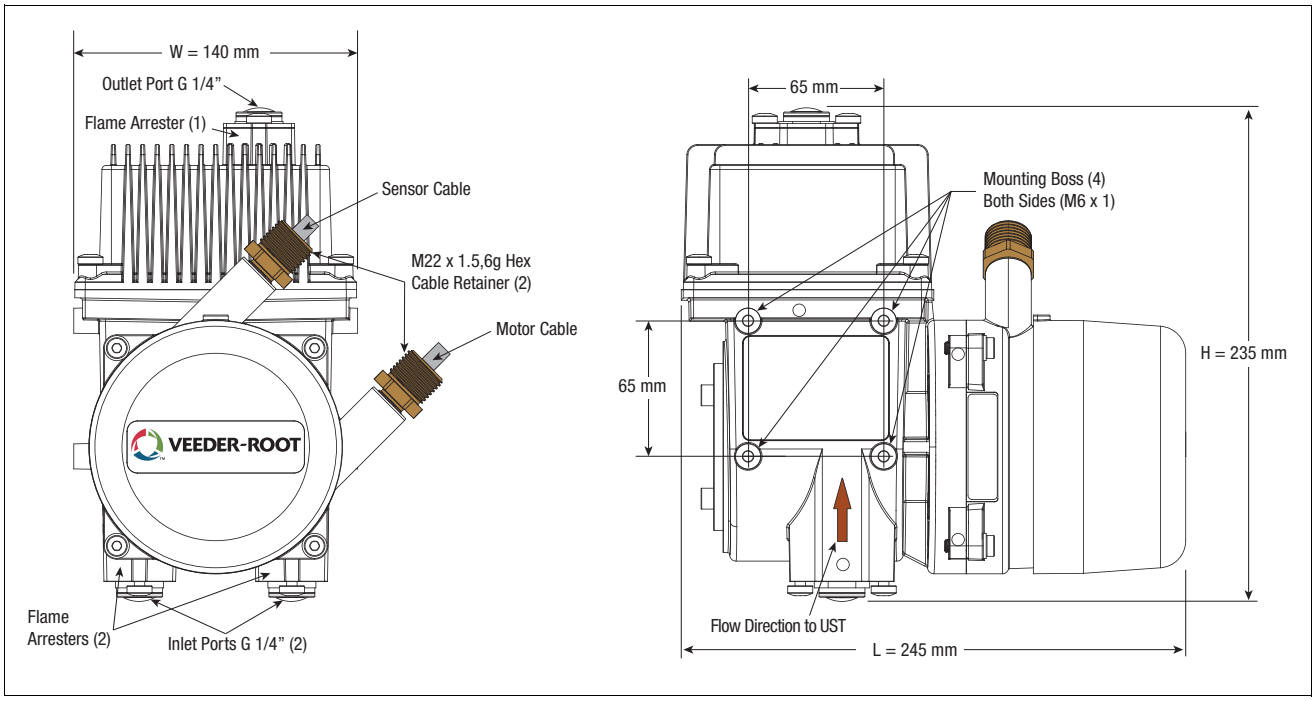

Figure 3. VaporTEK Pump Dimensions

VaporTEK Pump Specifications

Function	Description
Flow medium	Gasoline vapor
Flame Arrestors	Type: Ex IIA; Inlet & Outlet Ports
Mounting	Four M6 X 1 Mounting Boss (Either side of the pump)
Motor Type	Synchronous BLDC (Brushless DC) Motor
Voltage (Single Phase)	230 VAC (±10%)
Frequency	50/60 Hz
Watts	250W
Motor Speed	2500 rpm max.
Maximum flow rate	Up to 120 lpm
Noise Level	59 dB (A)

VaporTEK Controller

Configuration Type	VaporTEK Controller Mode	Mode Selection		
		J1	J2	J3-PROG.
VaporTEK Basic VaporTEK Plus	Two-speed system, high voltage hook signals are required	No	No	No
VaporTEK Enhanced VaporTEK Ultra	Electronic signal of fuel flow required	No	No	No
Board Programming Mode	Power OFF/ON cycle required	No	No	Yes
VaporTEK Enhanced VaporTEK Ultra	VaporTEK - master mode with monitoring system and re-regulation	Yes	Yes	No

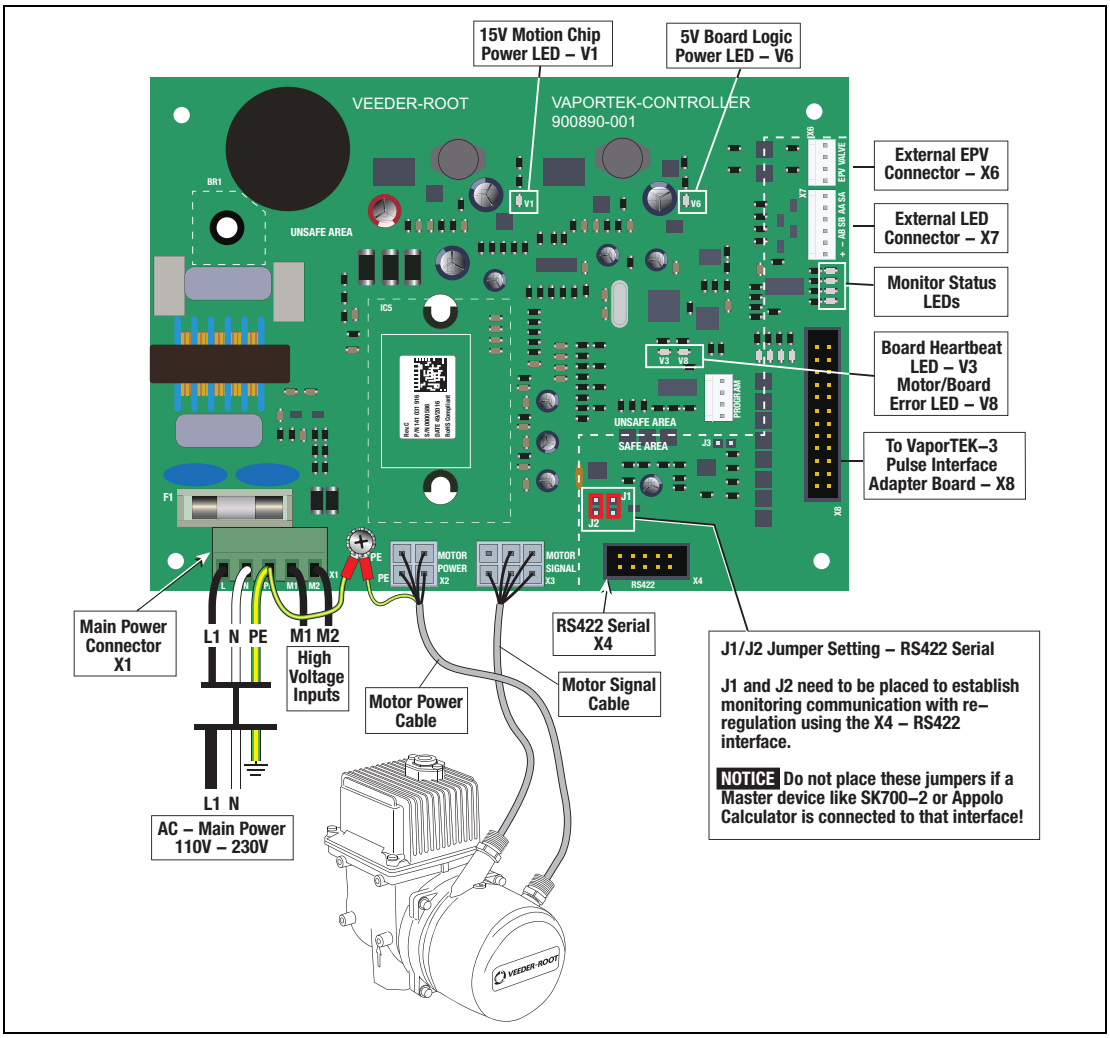

Figure 4. VaporTEK-3 Controller Board Connections

VaporTEK Controller Pulse Interface (Optional)

The VaporTEK Pulse Interface Adapter board provides four low-load pulse train inputs to each side of the dispenser (see Figure 5).

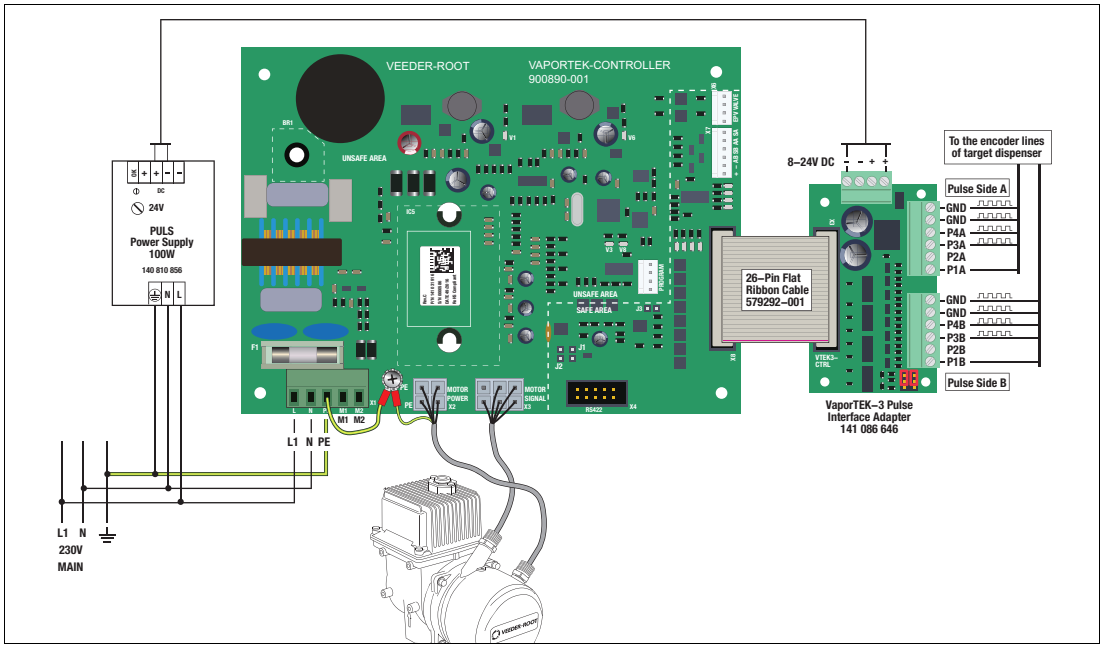

Figure 5. VaporTEK-3 Controller Board Connected to the VaporTEK Pulse Interface Adapter Board

VaporTEK Pulse Interface Adapter Board (P/N 900900-001) Jumpers

The VaporTEK Pulse Interface Adapter board jumper settings are shown in Figure 6.

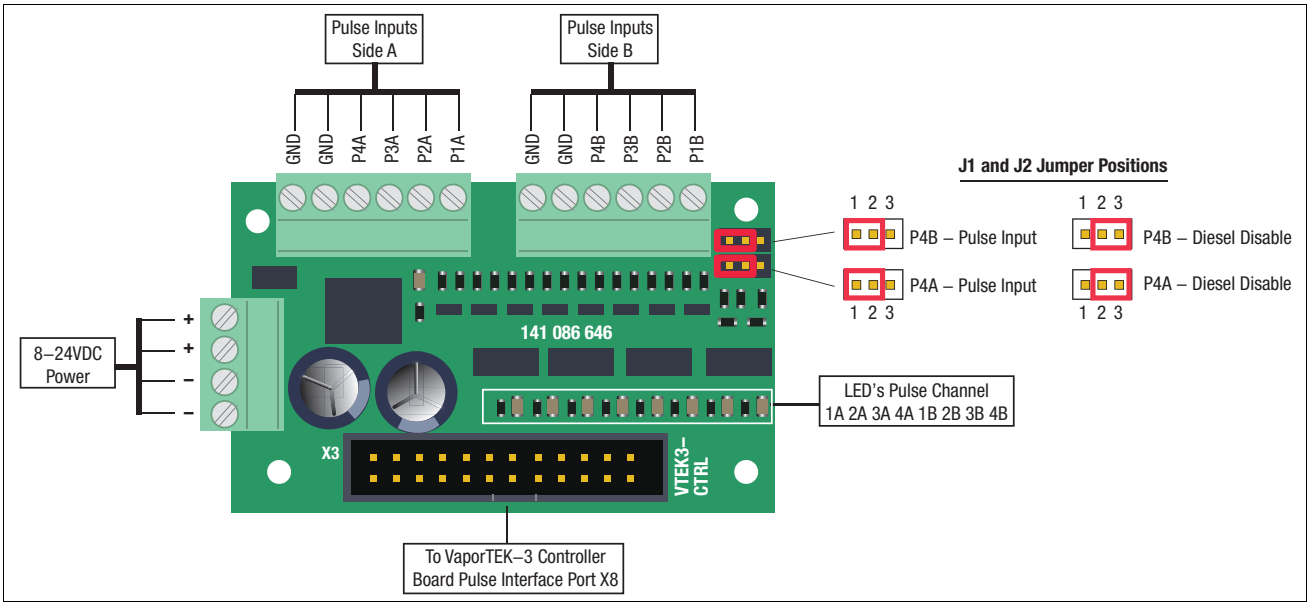

Figure 6. VaporTEK Pulse Interface Adapter Board Jumper Settings

Jumper J1/J2 defines the function on P4A / P4B input. A placement on position 1-2 sets the P4 input as pulse train input. With a placement on position 2-3 the P4 input is used as a Diesel - disable input. In this mode all pulse train inputs will be disabled if the voltage on P4 – Input is higher than 2.5V DC.

VaporTEK Valve Adapter Board (Optional)

The VaporTEK-3 – Controller Board, Rev. C, provides a dedicated output to the VaporTEK Valve Adapter board. A pulse wide modulated (PWM) signal is used to control the valve power for each side separately. An on-board integrated current regulator is stabilizing the valve current against temperature drift on the valve solenoid head.

An equalizer setup function provided by the FB1 – Service terminal (with software version 6.9 and above) allows the service technician to calibrate the valve power in dual transaction mode. This setup can also be done using a laptop along with the USB Service/ Flash – Adapter. Two setup points for each valve will be used to calibrate the valve curve. During a single side transaction the EPV's are controlled in ON/OFF - Mode.

Washers with 3mm orifice used to avoid ghost transaction on the Vaporix Monitoring can be omitted in this configuration.

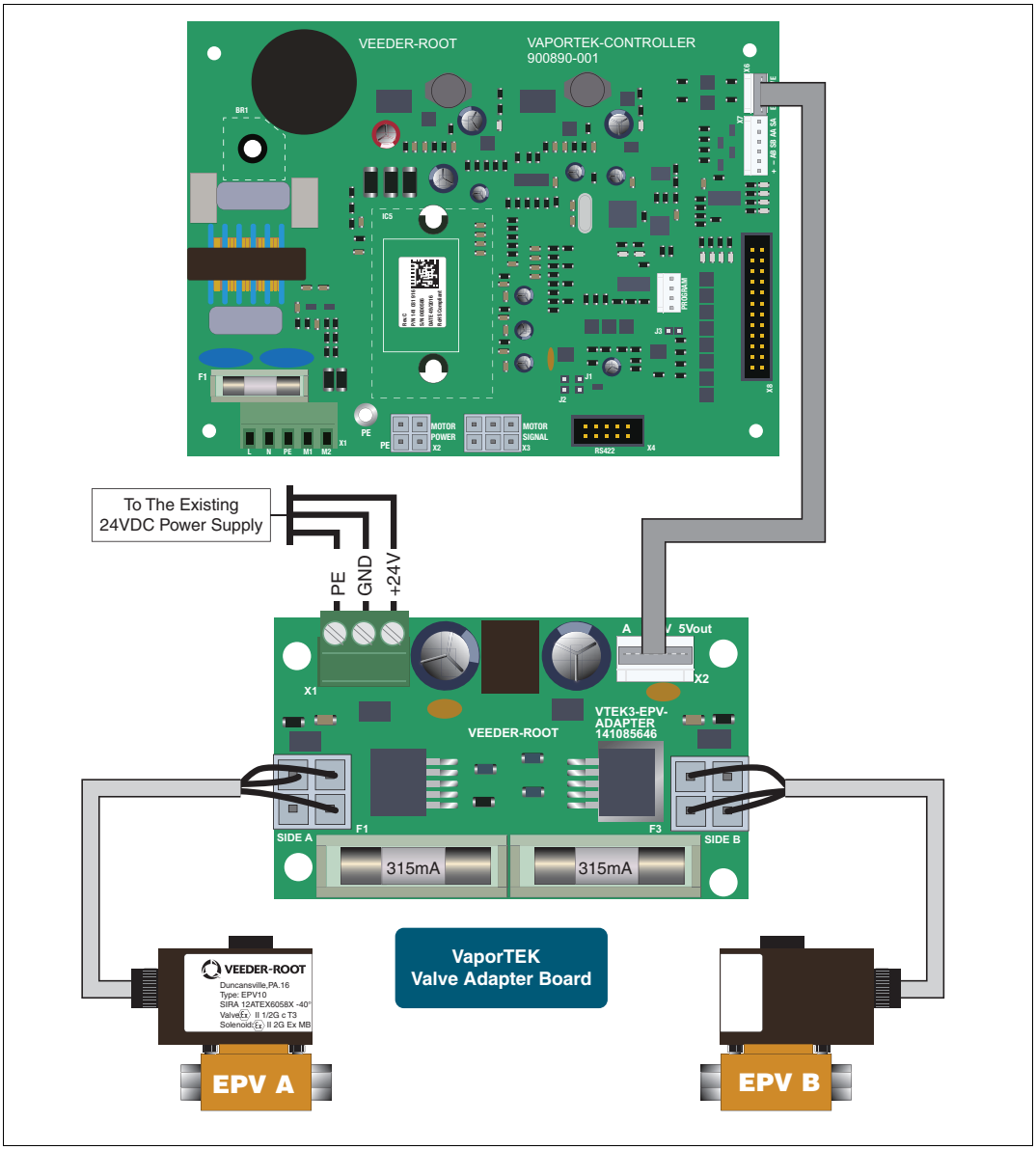

Figure 7. VaporTEK Valve Adapter Board Connected to the VaporTEK-3 Controller board

VaporTEK Pump Configuration

The VaporTEK Pump can be configured to operate in either a 2-Speed or a Variable-speed mode depending on the configuration type and available dispenser inputs/signals.

VaporTEK Configuration	Input Type	Mode of Operation	Required Components	Method of Operation
Basic	High voltage hook signal (110-240VAC)	Two Speed	VaporTEK-3 Controller	The VaporTEK Controller receives nozzle hook signals from either side of the dispenser. With one fueling point active, the pump operates in low speed. With two fueling points active, the pump operates in high speed.
	Low voltage hook signal (0-24VDC)		VaporTEK-3 Controller, High Voltage Relay	
Enhanced	High voltage hook signal (110-240VAC)	Two Speed	VaporTEK-3 Controller, MPV10	In this configuration a high voltage hook signal from either side of the dispenser operates a relay switch which in turn control's the high voltage input to the Vapor TEK Controller. **Note: One relay switch is required for each gasoline nozzle in the dispenser.** With one fueling point active, the pump operates in low speed. With two fueling points active, the pump operates in high speed. This configuration is typically used for multi-product dispensers with low voltage hook signals.
	Low voltage hook signal (0-24VDC)		VaporTEK-3 Controller, MPV10, High Voltage Relay	
Plus	Liquid pulse signal or serial communication line	Variable Speed	VaporTEK-3 Controller, Pulse Interface (optional)	VaporTEK-3 Controller receives the fuel flow information via serial data line or calculates the flow value using pulse inputs. This value will be used to control the motor speed.
Ultra	Liquid pulse signal or serial communication line	Variable Speed	VaporTEK-3 Controller, Valve Interface and EPV 10 Pulse Interface (optional)	VaporTEK-3 Controller receives the fuel flow information via serial data line or calculates the flow value using pulse inputs. This value will be used to control the motor speed. An additional connected Valve Interface along with two EPV's controls the A/L – Ration during a simultaneously transaction.

Installation

VaporTEK Pump

WARNING! Before installing this device, turn off, tag/lock out power to the dispenser.

1. Remove the dispenser's hydraulic cabinet sheet metal doors to access the dispenser hydraulics area.
2. Find a suitable location to install the VaporTEK Pump.
3. Ensure correct orientation of the pump, suction ports and discharge ports prior to installing in the dispenser. See Figure 8 for allowable VaporTEK Pump orientations (red arrows indicate direction of flow). Also ensure the electrical cables of the VaporTEK Pump's location will reach the VaporTEK Controller installed in the electronic cabinet of the dispenser (Unclassified Area).
4. After identifying the desired pump orientation, secure the VaporTEK Pump onto the dispenser support structure. Excessive vibration may require additional support and vibration mounts to secure the VaporTEK Pump.
5. Route the two cables (Motor and Signal) from the VaporTEK Pump into the dispenser's electronic cabinet. Tie wrap the cables neatly and securely against fixed support members away from moving parts.
6. Reinstall and secure the lower hydraulic doors.

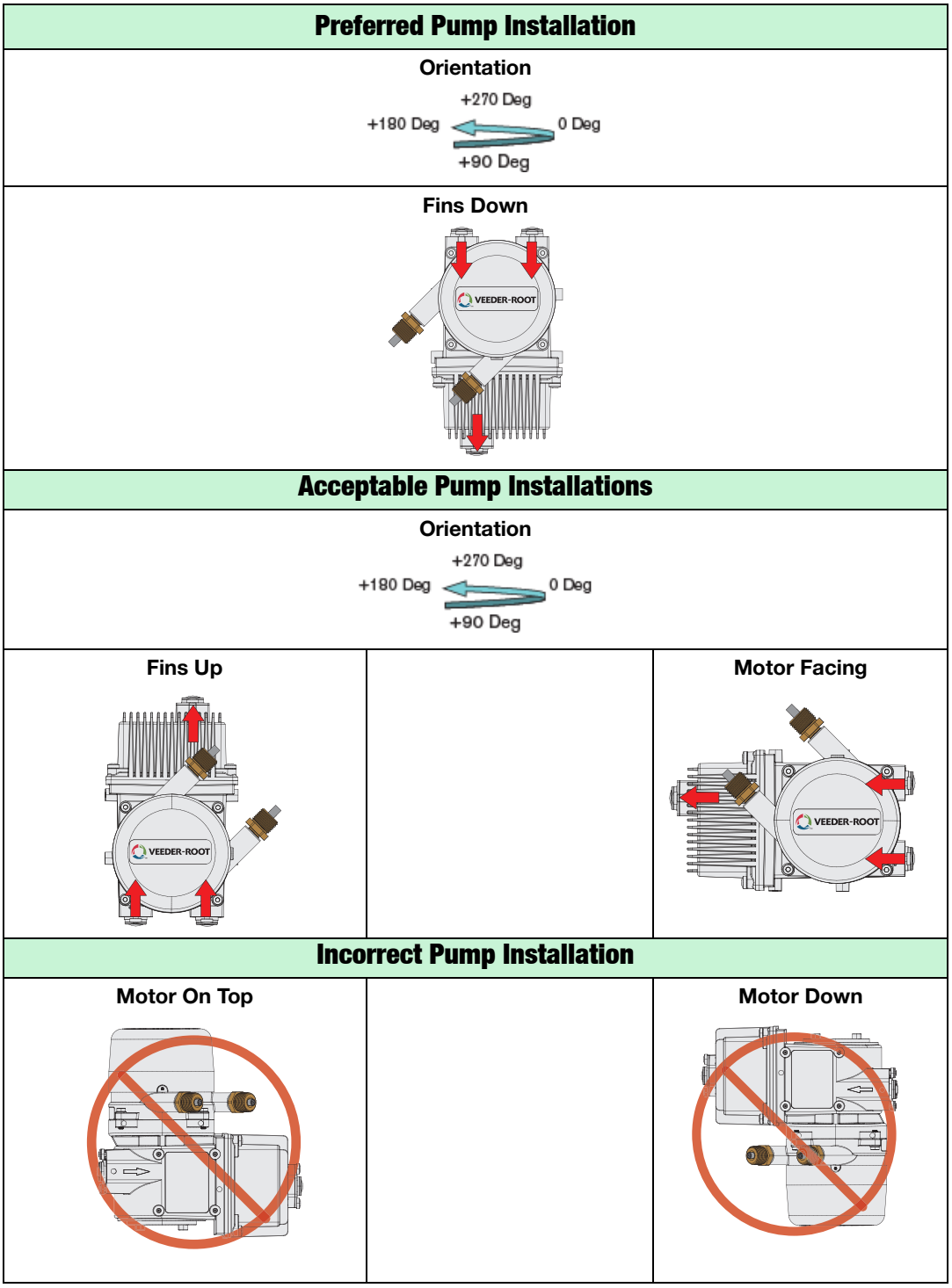

Figure 8. VaporTEK Pump Installation Orientations

VaporTEK-3 Controller and VaporTEK Pulse Interface Installation

WARNING! Before installing these components, turn off, tag/lock out power to the dispenser until all steps in this section are complete.

The VaporTEK-3 Controller and VaporTEK Pulse Interface board must be installed in the non-hazardous location of the dispenser (unclassified area), and protected from weather.

VAPORTEK-3 CONTROLLER BOARD INSTALLATION

1. Mount the VaporTEK-3 Controller board bracket to a clean sheet metal surface in the dispenser's electronic compartment using the two SHCS, M6X1 X 20MM LG, Grade 8.8; P/N 579281-001 bolts and two Hex Nut, M6 X 1, Steel, P/N 579082-001 nuts from the VaporTEK-3 Controller Board Kit - P/N 900895-001 (see item 1 Figure 9).

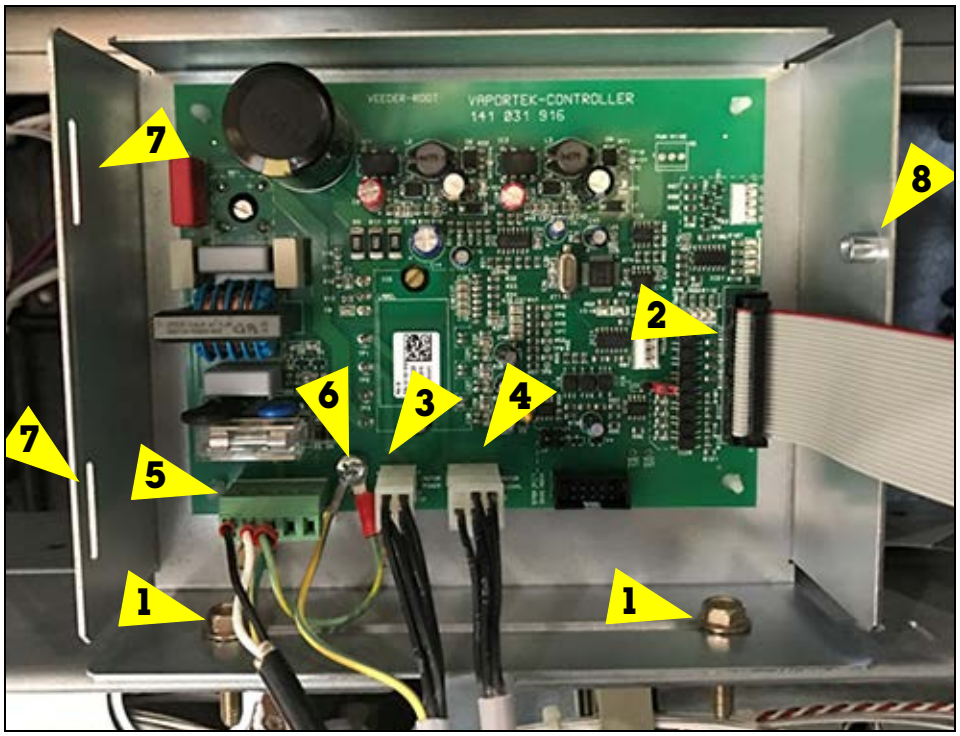

Figure 9. Install the VaporTEK-3 Controller Board Mounting Bracket in the Dispenser's Electronic Compartment

2. Plug in the ribbon cable connector that connects to the VaporTEK Pulse Interface Adapter board into the X8 male connector on the VaporTEK-3 Controller board (see item 2 in Figure 9).
3. Plug in the Motor Power 4-pin snap plug (item 3) and the Motor Signal 6-pin snap plug (item 4) from the VaporTEK pump.
4. Plug in the input power plug (L, N and Earth Ground) (item 5).
5. Attach the ground wire from the Motor Power cable and the Earth Ground wire from the input power cable to the VaporTEK-3 Controller board at the location shown (item 6), using one of the pan head Phillips screws, M4-0.7 X 12LG/Lock washer M4, P/N 579198-001 from the kit. There is a PEM nut under the board which receives the screw.

VAPORTEK PULSE INTERFACE ADAPTER BOARD INSTALLATION

1. Mount the VaporTEK Pulse Interface board to the back of the new sheet metal bracket 900892-001 with the four stand offs (579081-001) from the kit (see item 1 ([typical 4 corners], Figure 10).

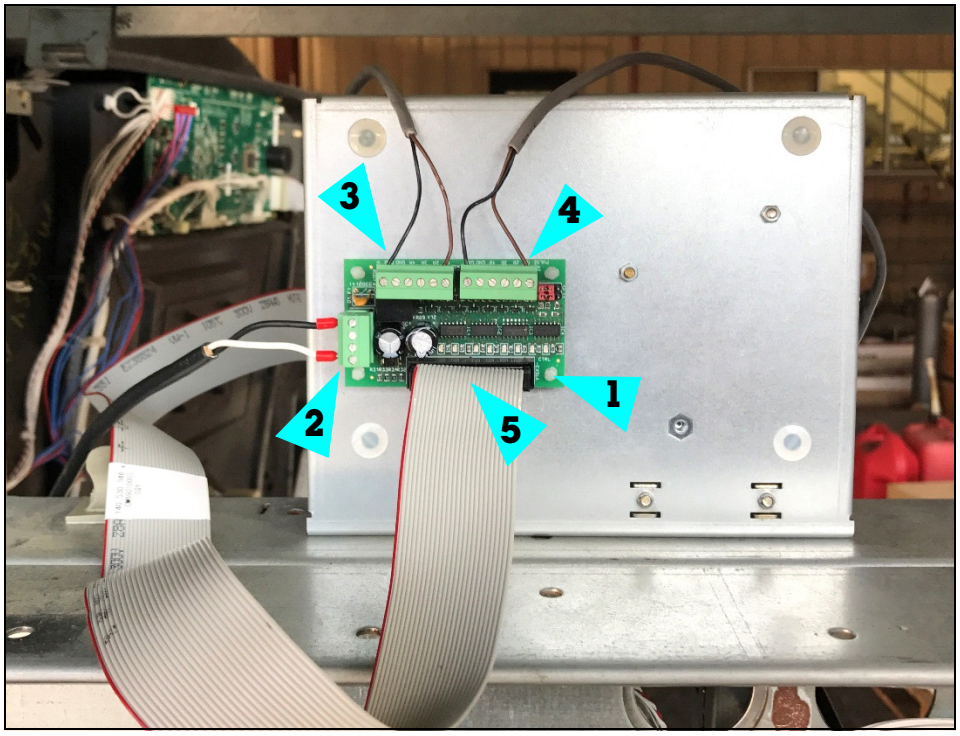

Figure 10. VaporTEK Pulse Interface Adapter Board Mounted to Back of VaporTEK-3 Controller Board Housing

2. Plug the 24V input cable wires into the terminal plug (item 2) on the VaporTEK Adapter Interface board The + to wire connects to a + terminal and the negative wire to a negative (-) terminal. Note: terminal polarities are stenciled on the board beneath the plug.
3. To get 1 grade pulse input for Side A, insert cable 900643-001 to P1A and GND terminals to the board as shown (Item 3). For additional grades utilize additional ports.
4. To get 1 grade pulse input for Side B, insert cable 900643-001 to P1B and GND terminals to the board as shown (Item 4). For additional grades utilize additional ports.
5. Plug the 26-Pin Flat Ribbon Cable (P/N 579292-001) plug (Item 5) to the board as shown.
6. Get the VaporTEK-3 Controller board MTG Cover, P/N 900893-001 from the VaporTEK-3 Controller Board Kit - P/N 900895-001. Notice the two slots in the left side of the housing (item 7). The two bent tabs on the left side of the cover will hook into the tabs and swing from left to right covering the housing. A single tab on the right side of the cover will line up over the PEM nut in the right side of the housing (item 8). Screw the second pan head Phillips screws, M4-0.7 X 12LG/Lock washer M4, P/N 579198-001 from the kit into the PEM nut to secure the door over the housing (see Figure 11).

Figure 11. VaporTEK-3 Controller Board Mounting Cover Secured with Safety Label Affixed.

Alternate VaporTEK-3 Controller Board Mounting

This procedure is required when installing the VaporTEK-3 Controller board in the dispenser electronics compartment as a standalone component.

1. Prior to mounting the board onto a sheet metal surface of the electronics compartment, paint the bottom surface areas of the board's motion controller and rectifier chips (Figure 12) with a thin film of thermal transfer paste (NTE303 or equivalent).

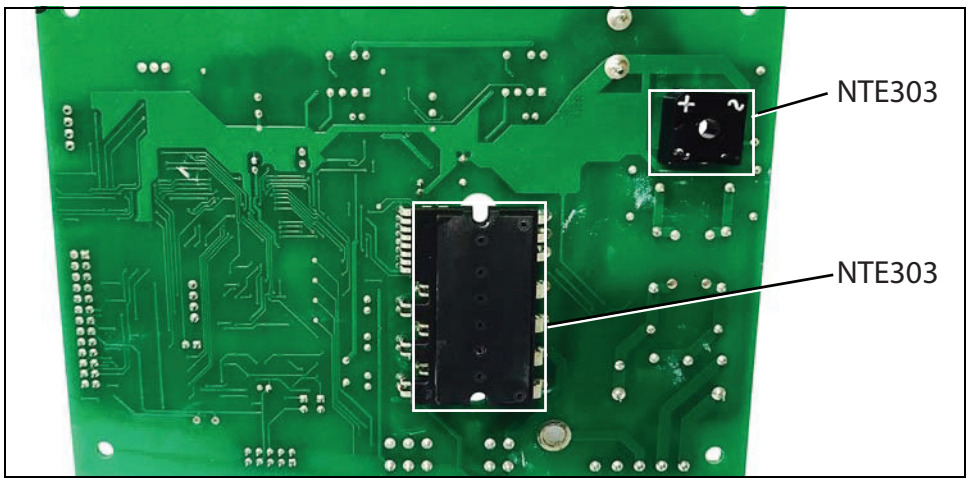

Figure 12. Apply Thermal Transfer Paste To These Component Surfaces

1. Fasten the VaporTEK-3 Controller board to the mounting surface with three M3-0.5 X12 long screws, and three M3-0.5 tooth washer hex nuts, (see Item 1, Figure 3). Torque each screw to a nominal 0.60 N-m (min. 0.50 N-m / max. 1.00 N-m).

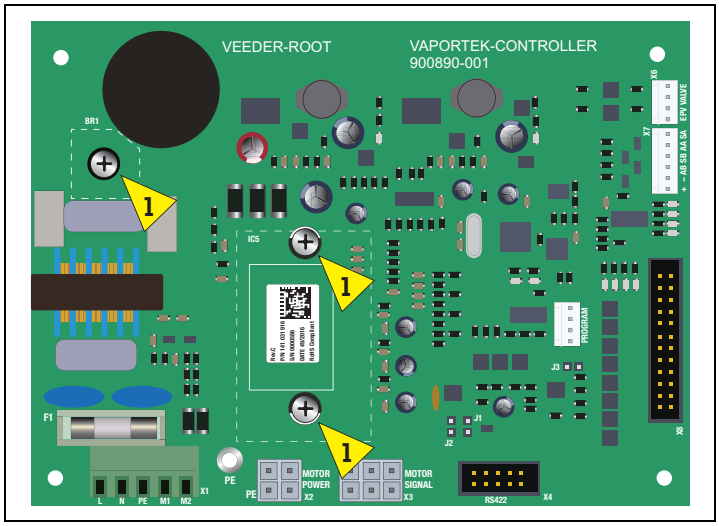

Figure 13. Controller Board Mounting Screws

Retrofit Installation Of VaporTEK-3 Controller Board

WARNING! The electrical power to this equipment must be removed prior to any installation or maintenance work being carried out.

FAILURE TO COMPLY WITH THE FOLLOWING WARNINGS AND SAFETY PRECAUTIONS COULD CAUSE DAMAGE TO PROPERTY, ENVIRONMENT, RESULTING IN SERIOUS INJURY OR DEATH.

Only technicians who have received the relevant training in a Gilbarco training center, and who are authorized to work on systems in potentially explosive atmospheres, shall undertake any installations or maintenance work.

During the operation, maintenance or assembly all valid safety regulations must be observed. This includes also local accident prevention and safety regulations, which are unstated in this document.

RULES TO BE OBSERVED

- Regulation concerning flammable liquids - VbF
- Technical guidelines for flammable liquids - TRbF respectively technical guidelines industrial safety regulations TRBSASdapter
- Technical rules GAS - TRG (For combined storage and delivery with gas)
- Regulations concerning plants for the storage, bottling and transfer of substances harmful to water - VawS
- Federal emission protection act
- VDE-regulations
- Explosion protection guidelines
- Calibration regulations
- Technical guidelines/regulations of the organization “technical monitoring association” - VdTÜV

RETROFIT KITS

TO REPLACE AN EARLIER VAPORTEK CONTROLLER BOARD (P/N 900628-001):

- VaporTEK-3 Controller Board Kit P/N 900895-001
- Adapter Cable, Control (Signal) P/N 900898-001 (Screw terminal plug one end/4-pin snap plug other end)
- Adapter Cable, Motor (Power) P/N 900899-001 (Screw terminal plug one end/6-pin snap plug other end)

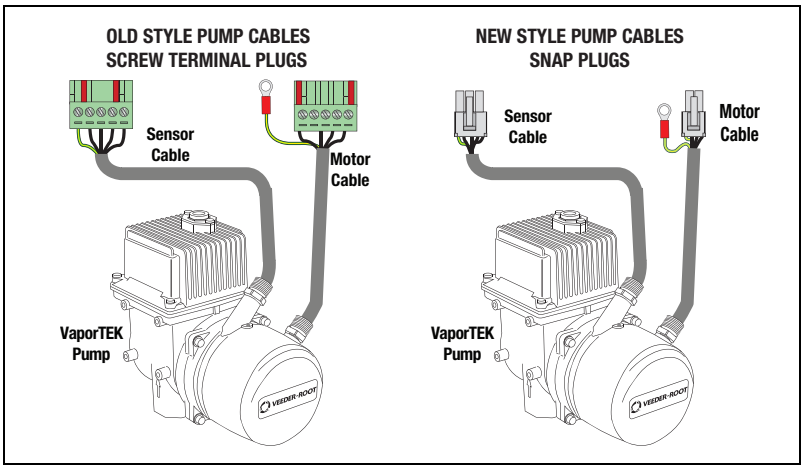

Figure 14. Old Versus New Style VaporTEK Cable Plugs

TO REPLACE A FAULTY VAPORTEK PUMP:

- VaporTEK-3 Controller Board Kit P/N 900895-001
- VaporTEK Pump

SITE PREPARATION

- Before opening the pump, switch off, tag and lock out the main switch/breaker at the main distribution board so that they cannot be switched back on.
- Please make sure, that the area around the dispenser is blocked for customers.
- Remove all panels from the dispenser and take care for good ventilation. For further information see installation manual.
- Look for leakage. Possible fuels on ground must be removed.

Retrofit Procedure

VaporTEK-3 Controller Board Replacement

1. Replace the old VaporTEK Controller and housing and with the new VaporTEK-3 Controller and housing following the steps in “VaporTEK-3 Controller and VaporTEK Pulse Interface Installation” on page 21.
2. Connect the P/N 900899-001 adapter cable’s screw terminal plug to the pump motor power cable screw terminal plug. Connect the 4-pin snap plug end of the motor power adapter cable to the Motor Power connector on the VaporTEK-3 Controller board (Item 3 in Figure 9).
3. Attach the adapter cable’s Motor Power plug ground wire to the PE terminal on the VaporTEK-3 Controller board (Item 6, Figure 9).
4. Connect the P/N 900898-001 adapter cable’s screw terminal plug to the pump control cable screw terminal plug. Connect the 6-pin snap plug end of the motor control adapter cable to the Motor Signal connector on the VaporTEK-3 Controller board (Item 4 in Figure 9).

VaporTEK-3 Controller Board/New VaporTEK Pump Replacement

1. Remove the old VaporTEK pump and replace it with the new one.
2. Replace the existing VaporTEK Controller and housing and with the new VaporTEK-3 Controller board and housing following the steps in “VaporTEK-3 Controller and VaporTEK Pulse Interface Installation” on page 21.

Wiring Schematics

VaporTEK Wiring

1. Depending on the configuration used to actuate the pump, follow steps 2,3 and 4.
2. VaporTEK with High Voltage Hook Signal (see Figure 15)
   a. Refer to the dispenser manufacturer's manual, to determine where to tap into the 110-230 VAC hook signal. Using the 18AWG, 2 conductor cable included in the VaporTEK-3 Controller Kit, connect the hook signal from Side A to M1 on the VaporTEK-3 Controller board and connect the hook signal from Side B to M2.
3. VaporTEK with Pulse Signal for Non E500S Dispensers - Requires VaporTEK Pulse Adapter Interface (see Figure 16).
   a. The VaporTEK Pulse Adapter Interface board can be connected to a maximum of 4 pulse signals per side.
   b. Connect the pulse signal to the VaporTEK Pulse Interface using the 24AWG, 8 conductor signal cables included in the Kit. (Note: 2 conductors used per pulse signal input, see wiring diagram in Figure 17.
   c. A monitoring system can be connected to the RS422 - X4 Interface using a 10 pin ribbon cable. To establish communication with the monitoring system, Jumpers J1 and J2 need to be in place on the VaporTEK-3 Controller board (see Figure 4 on page 14). After power up the VaporTEK-3 Controller board starts to communicate to the connected monitoring system automatically.
4. VaporTEK with RS422 –Serial Connection
   All information like fuel flow, Monitoring status and re-regulation will be exchanged using a 10-pin standard ribbon cable (see Figure 18).
5. VaporTEK with Low Voltage hook signal with relay switches (see Figure 19).
   a. Refer to the dispenser manufacturer's manual to determine the dispenser type (Blended or Multi product), the number of available nozzle hooks and where to tap into the hook signal (verify the low voltage hook signal voltage rating is 3-32 VDC).
   b. Using the 18AWG, 2 conductor cable from the kit, connect each nozzle hook signal on Side A of the dispenser to one relay circuit.
   c. A high voltage source (110-230VAC) is connected to M1 on the VaporTEK-3 Controller board through all the relay circuits on Side A (See Figure 20) for low voltage relay wiring diagrams).
   d. Make similar connections on Side B and connect to M2 on the VaporTEK-3 Controller. board.

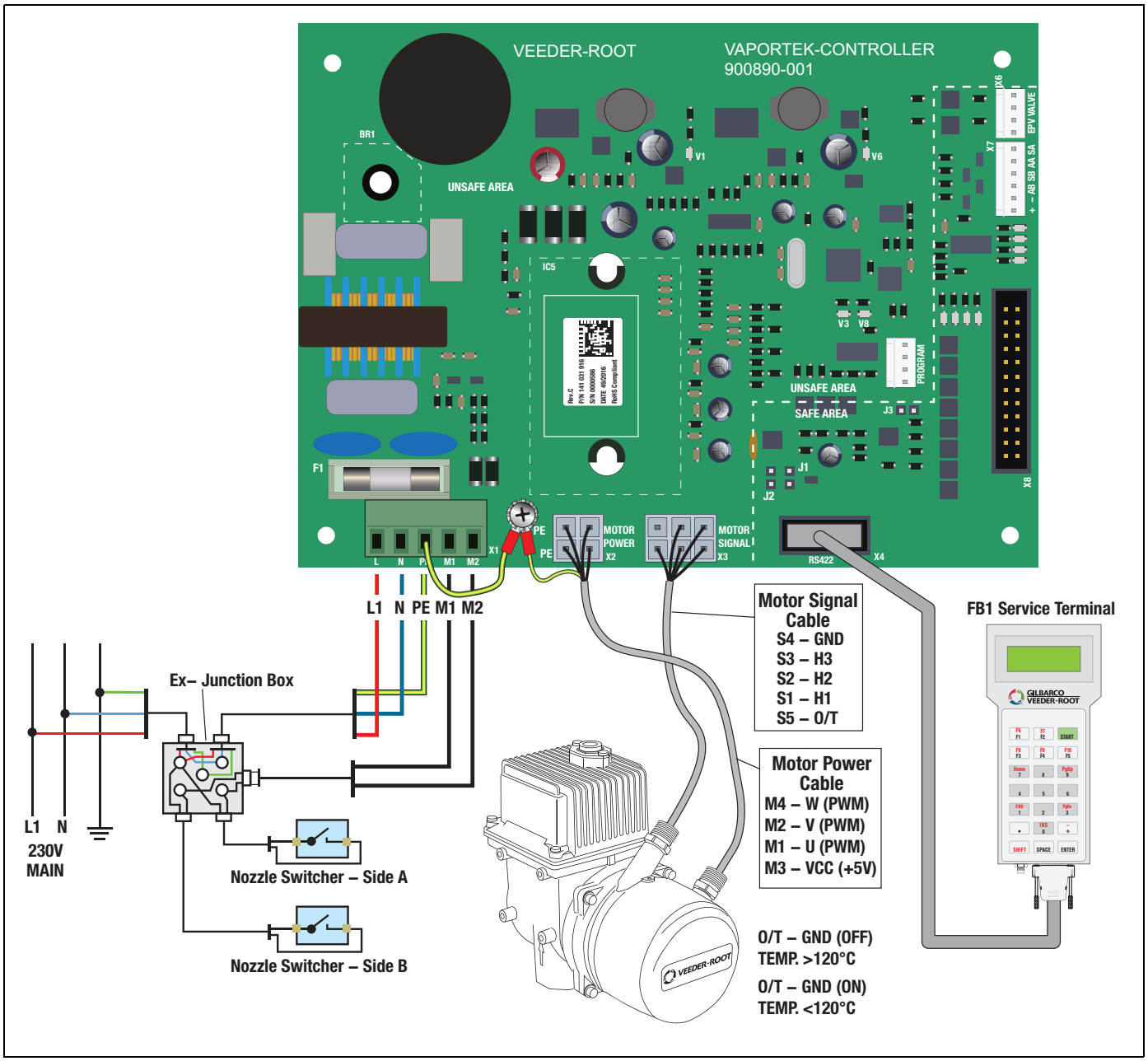

Figure 15. VaporTEK System - High Voltage Hook Signal Input

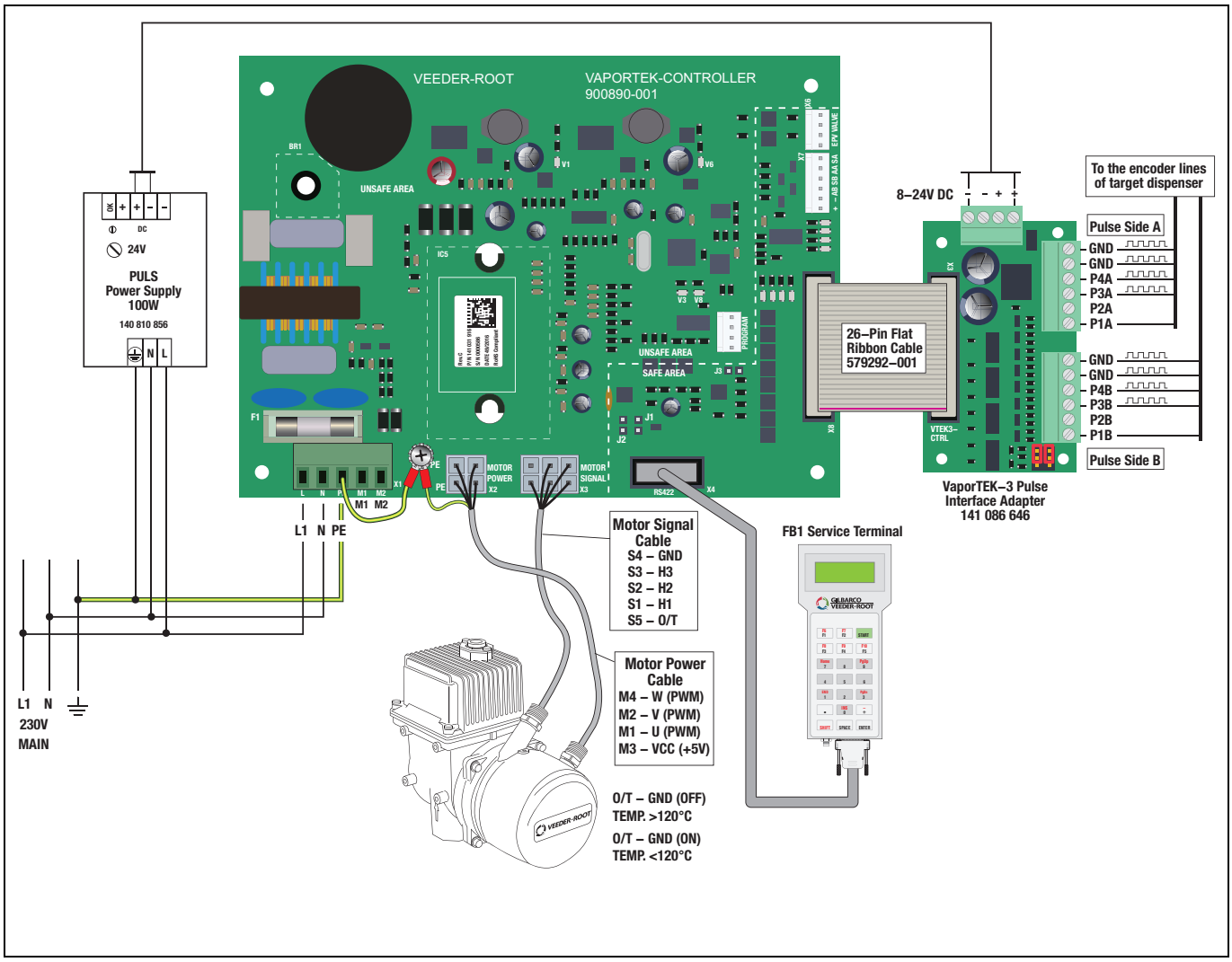

Figure 16. VaporTEK System - Liquid Pulse Signal Input

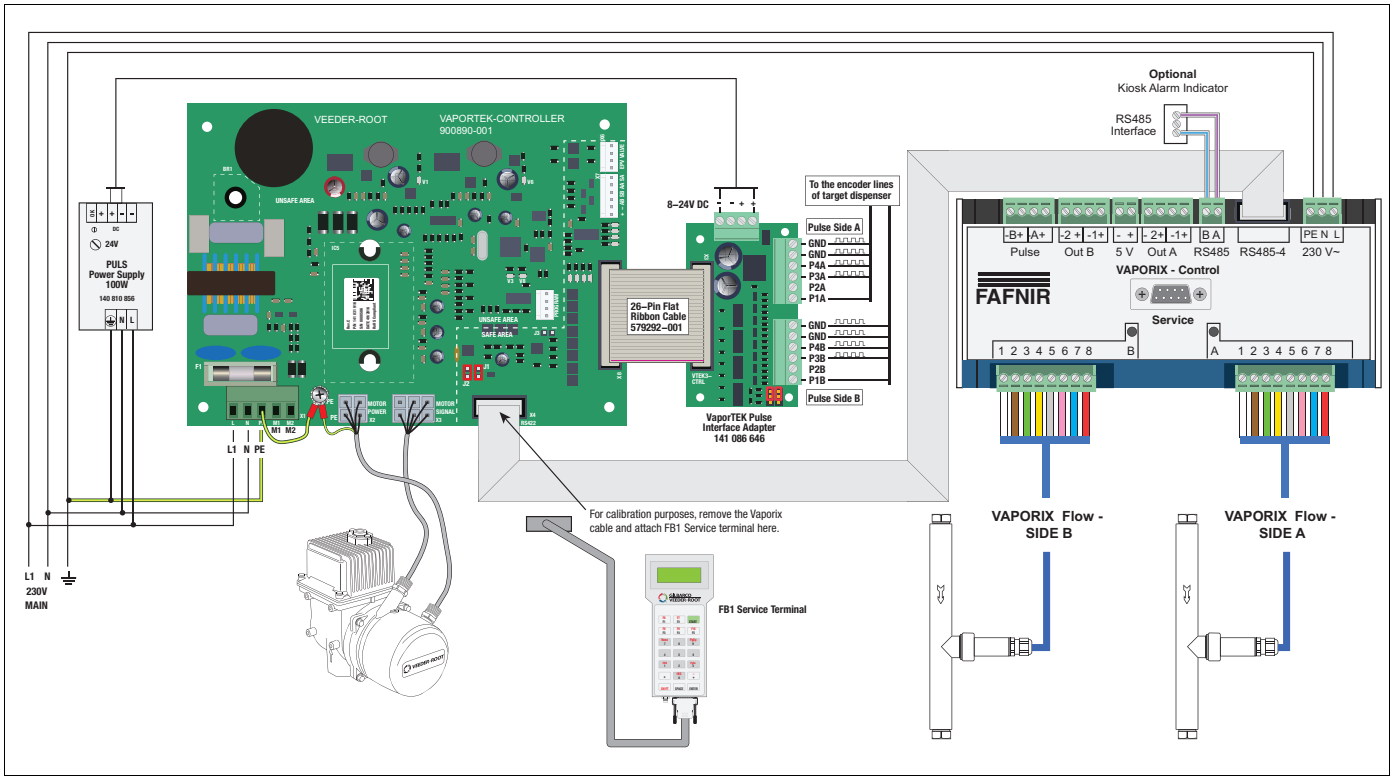

Figure 17. VaporTEK System - Liquid Pulse Signal Input and Monitoring

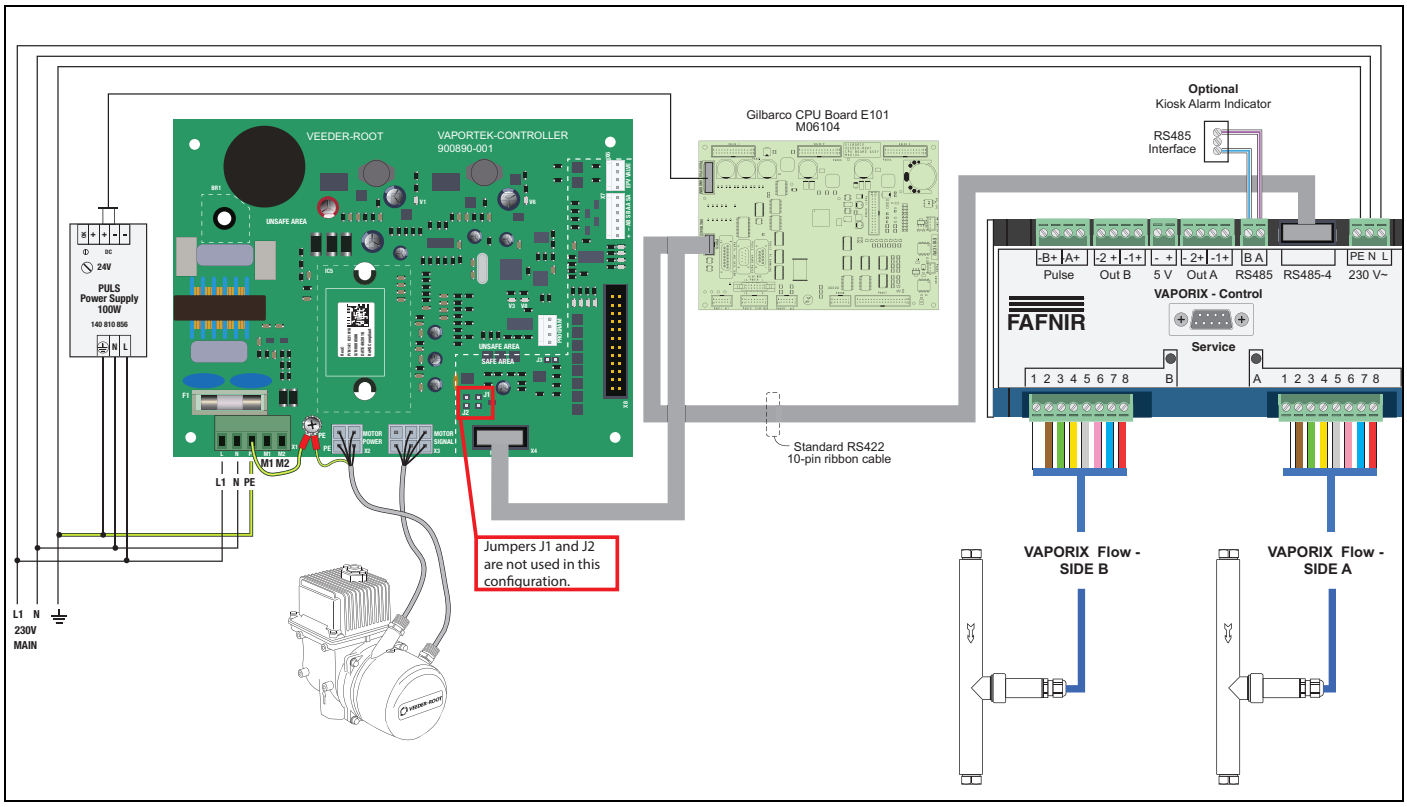

Figure 18. VaporTEK System – Serial Connection and Monitoring Using RS422 – Interface with Re-regulation Function.

6. VaporTEK with low Voltage hook signal with relay switches (see Figure 16)
   a. Refer to the dispenser manufacturer's manual to determine the dispenser type (Blended or Multi-product), the number of available nozzle hooks and where to tap them (Verify the hook signal voltage rating is 220/240 VAC).
   b. Using the 18AWG, 2 conductor cable from the kit, connect each nozzle hook signal on Side A of the dispenser to one high voltage relay circuit.
   c. A High Voltage source (110-230VAC) is connected to the M1 on the VaporTEK Controller through all the relay circuits on Side A (See Figure 18 for high voltage relay wiring diagrams).
   d. Make similar connections on Side B and connect to M2 on the VaporTEK Controller.

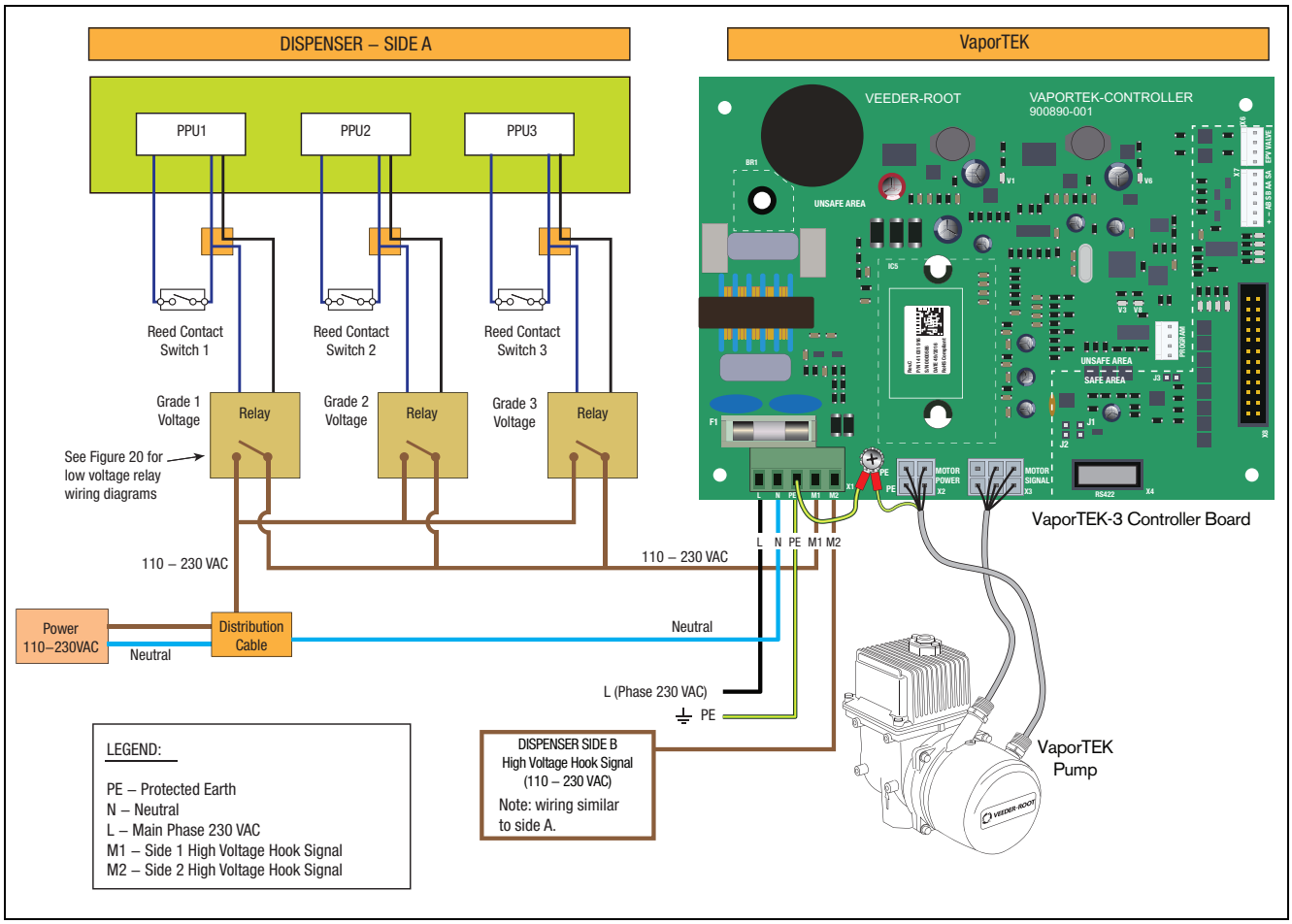

Figure 19. VaporTEK System - Low Voltage Hook Signal with Relay Switch

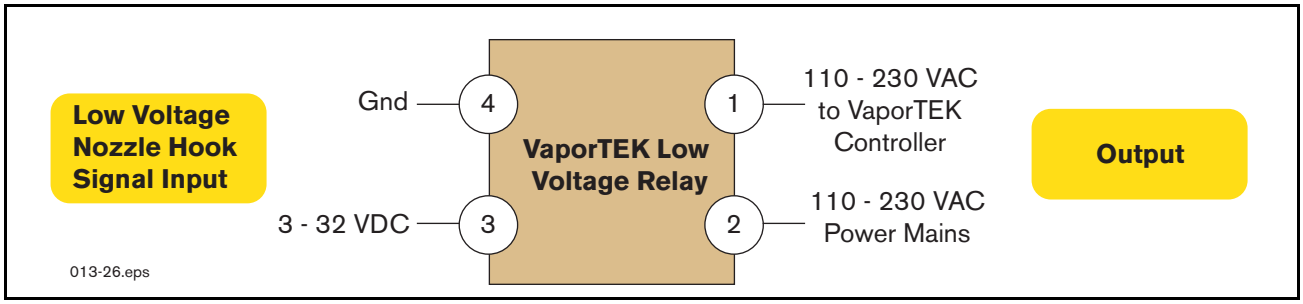

Figure 20. VaporTEK Low Voltage Relay Diagram

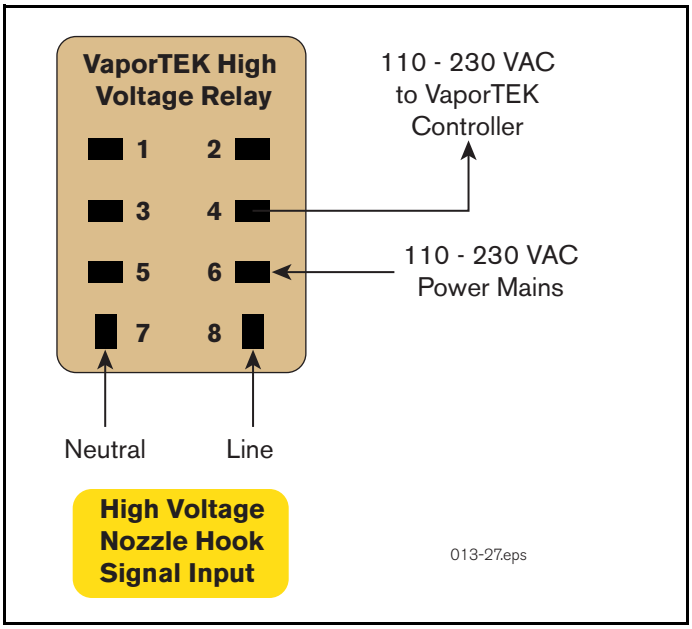

Figure 21. VaporTEK High Voltage Relay Diagram

Communication Setup - VaporTEK Interface

Setup with Laptop

Switch off, tag, and lockout the 230V AC Main power to the VaporTEK-3 Controller board and wait at least 30 seconds for it to power down.

Connect your laptop to the VaporTEK-3 Controller board using the special USB Adapter flash adapter P/N: 141 057 636 as it's shown in Figure 22.

NOTICE **All necessary setup, such as pulse ratio and K-Factor, can be done by using a FB1-Service Terminal.**

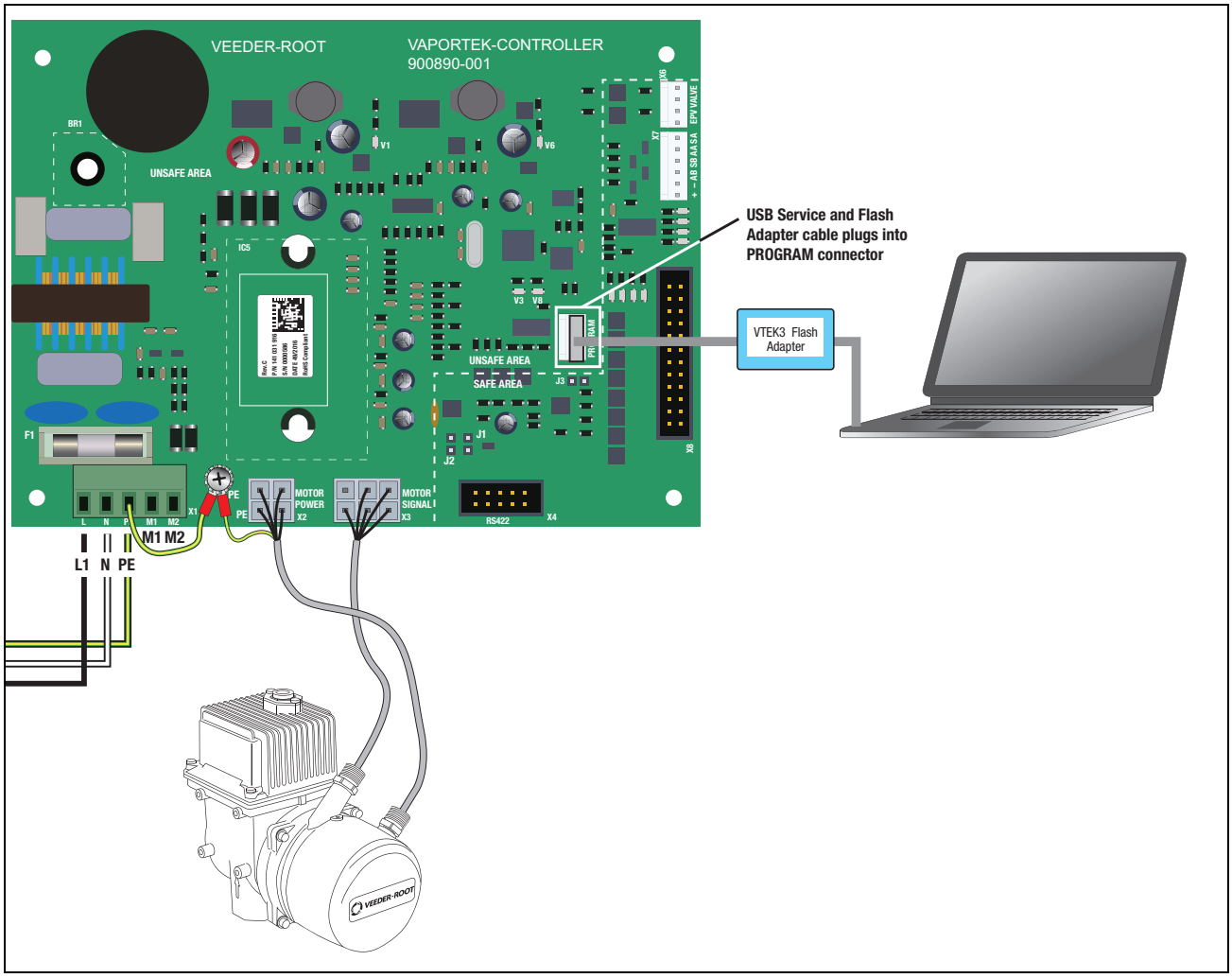

Figure 22. VaporTEK USB-Adapter Service

1. On your laptop, go to Start > All Programs > Accessories> Communications >HyperTerminal.

   NOTICE **HyperTerminal" is an inbuilt program for Windows XP and earlier operating systems. It is not readily available on Windows 7 and needs to be downloaded from the Internet. Also, a non-commercial program like "M16 –Terminal" can be downloaded and used instead of HyperTerminal.**

   Once the HyperTerminal menu screen appears, click on '**File**' in the menu bar and select '**New Connection**'.

2. In the Connection Description dialog box Name field, enter '**VaporTEK**' . Click '**OK**' (see example below).

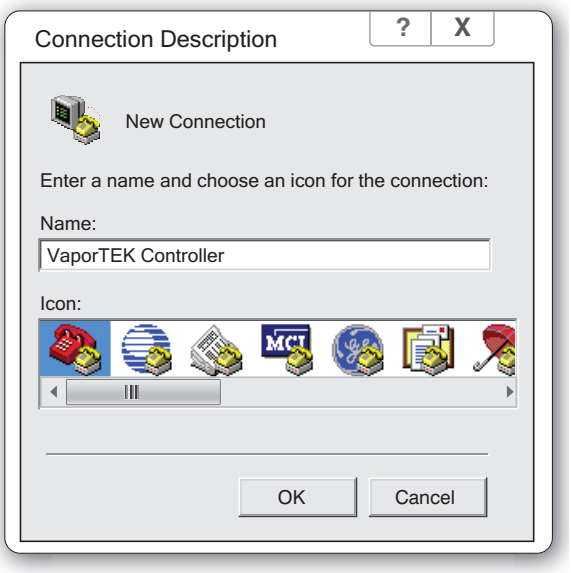

3. Select the appropriate COM port on your laptop (COM X in example below). To verify COM port, go to Control Panel/System/Device Manager and select ports. Check to see which COM port says USB 2.0. Click '**OK**'.

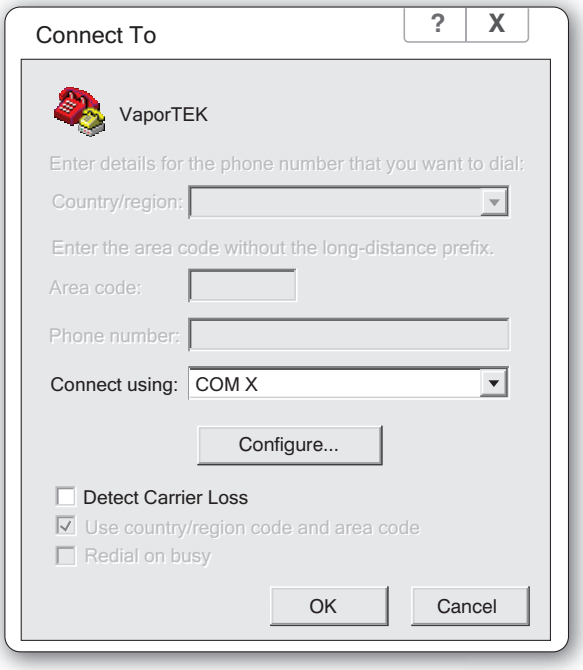

4. In the COM Properties dialog box (COM X in the example below, set the all of the port setting fields as shown and click '**OK**'.

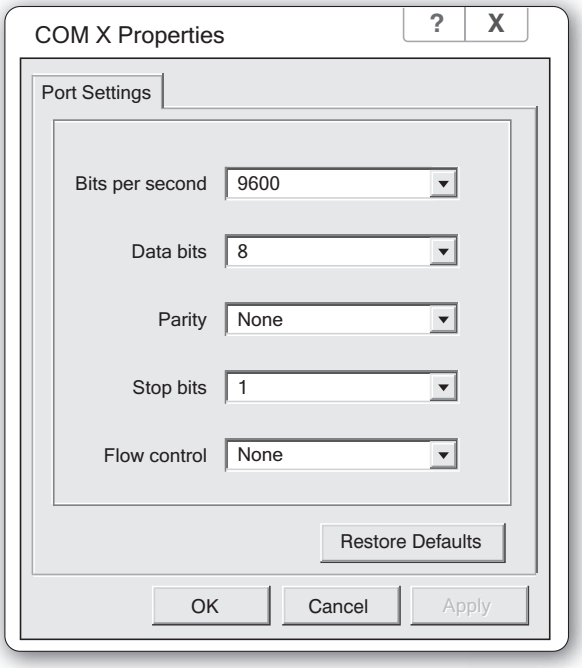

5. Click '**File**' in the HyperTerminal window and select Properties, then click the '**Settings**' tab to open the dialog box shown below. Double check and make sure all settings match the example below.

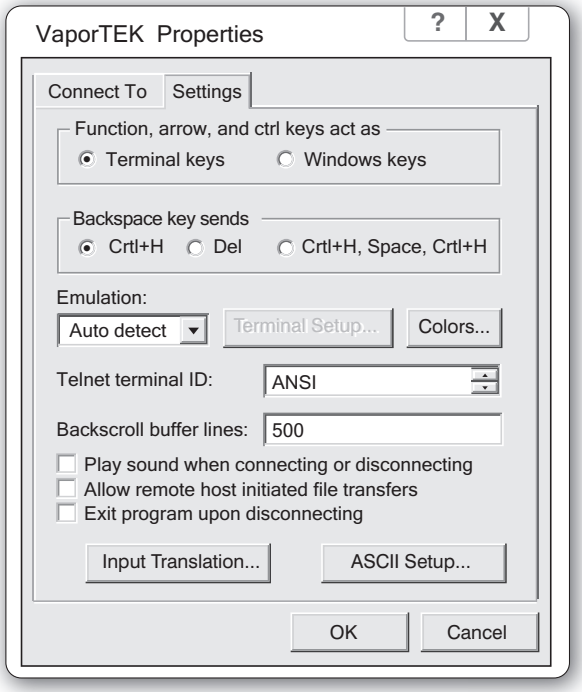

6. Click the '**ASCII Setup**' button to and set the properties shown below:

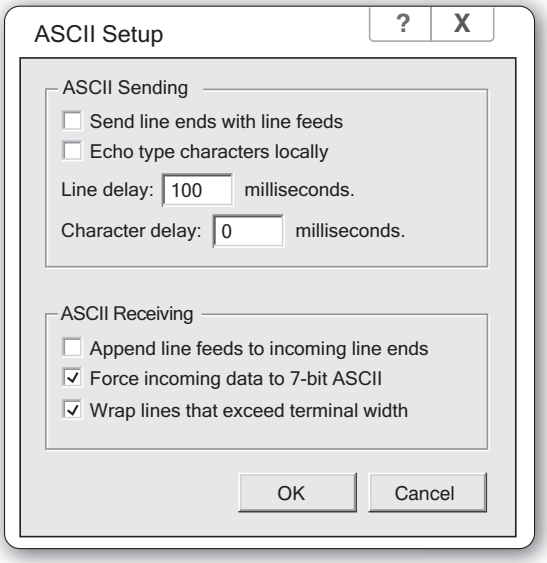

7. Click '**OK**' to return to the main window of HyperTerminal.
8. On power up the current settings display:

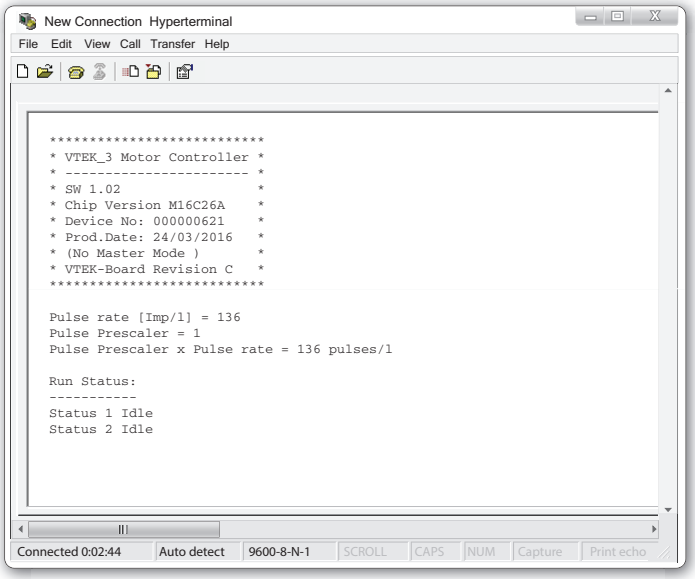

9. Type '**m**' on your keyboard to display the following menu:

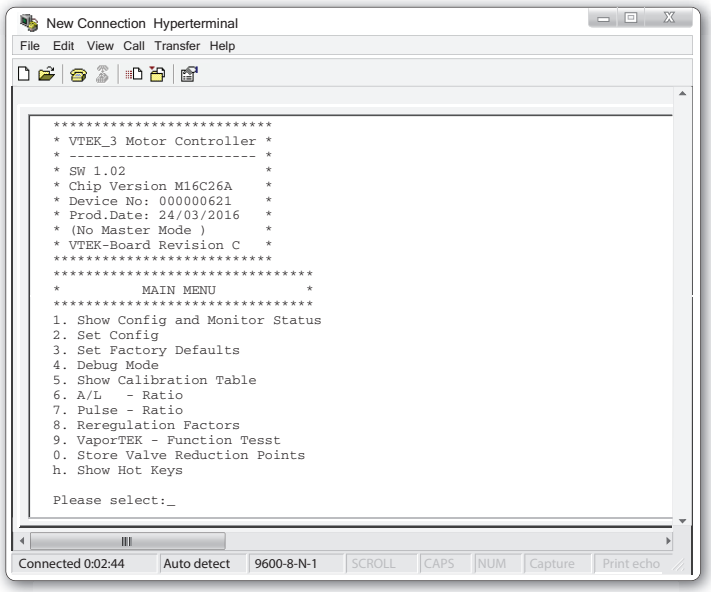

10. Show Config and Monitor Status: Press '**1**'
    Shows the configuration currently set.

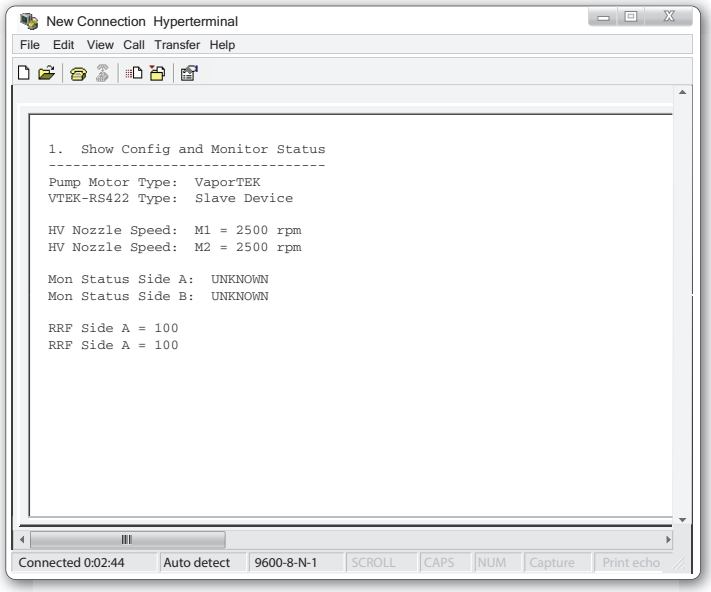

11. Set Configuration: Press '**2**'

    The Set Configuration sub menu shows how the motor speed value to the dedicated HV- Signals M1 and M2 can setup. Once the High Voltage (HV) Input M1 or M2 becomes active the motor runs with the setup speed. If both HV-Signals become active the motor runs with the speed which is the results of adding the single speed values of M1 and M2.

    If the result of speed value is higher than the max value then the max speed (2500 RPM) will be performed.

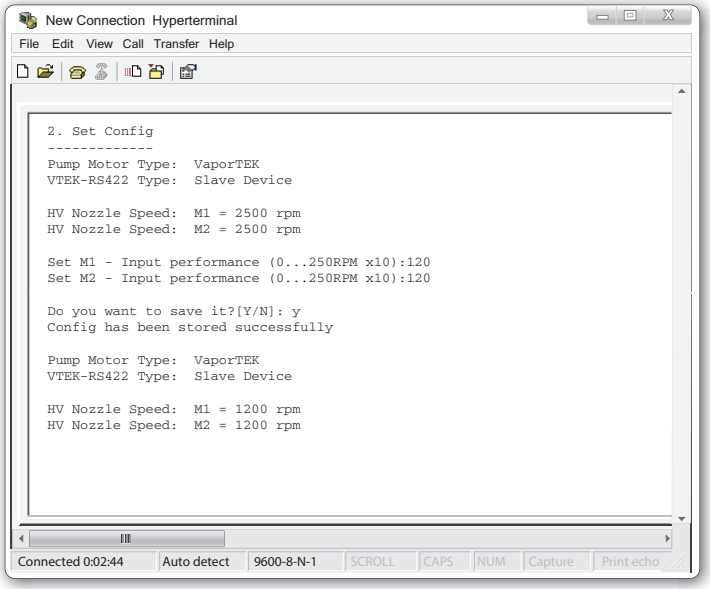

12. Set Factory Defaults: Press '**3**'

    This function sets all configuration parameter into default conditions.
    - M1 and M2 H/V-Inputs are set default 1000 RPM.
    - The Pulse Ratio is set to 136p/l.
    - The A/L - Ratio is set to 100%.

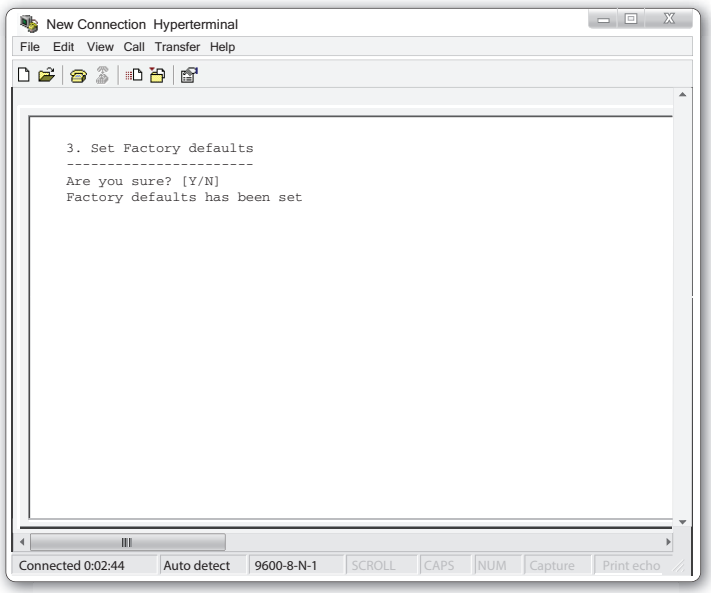

13. Debug Modes: Press '**4**'

This sub-menu allows a debug mode selection. If fuel flow debug mode is selected the screen will show the fuel flow rate when a transaction is running. Pressing '**f**' again will disable the flow debug mode. During flow debug mode no other mode can be activated.

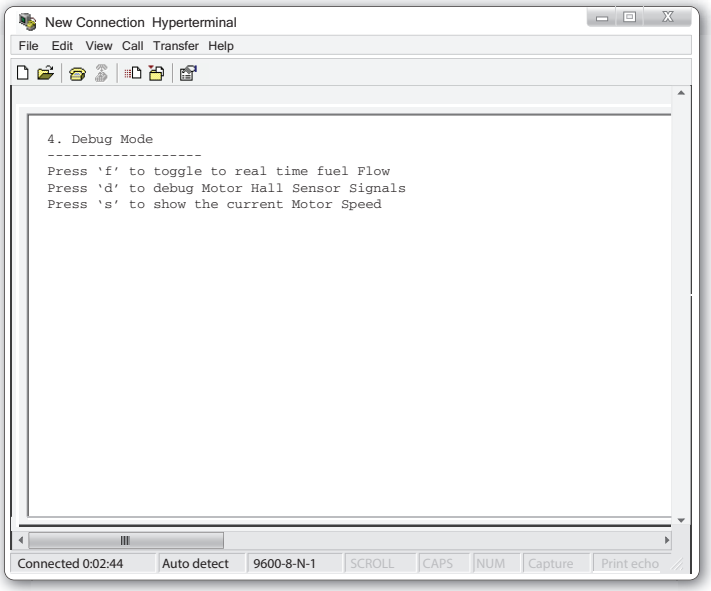

Once the VaporTEK Pump Unit starts running the fuel flow and the related motor speed information will be shown on the screen. Press the '**f**' button again to disable this function.

Press '**s**' to show the power consumption data of motor.

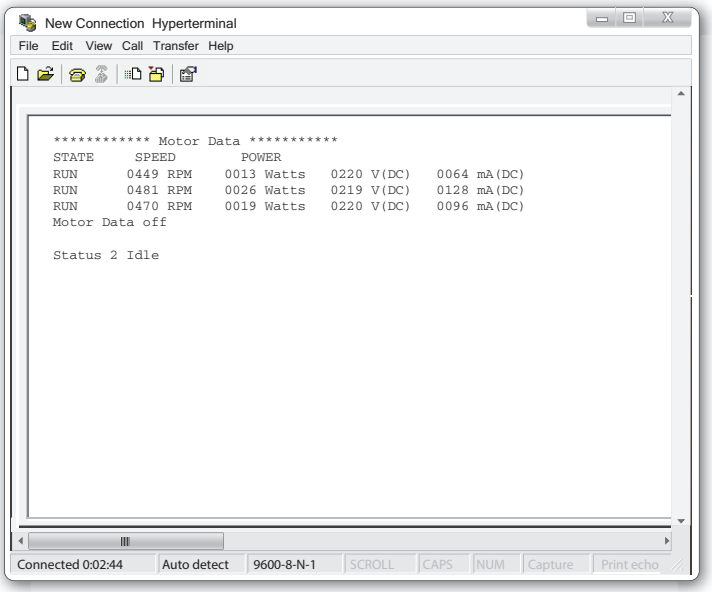

14. Show Calibration Table: Press '**5**'

    Displays factory set calibration table when connected for the first time; thereafter shows the latest calibrated table.

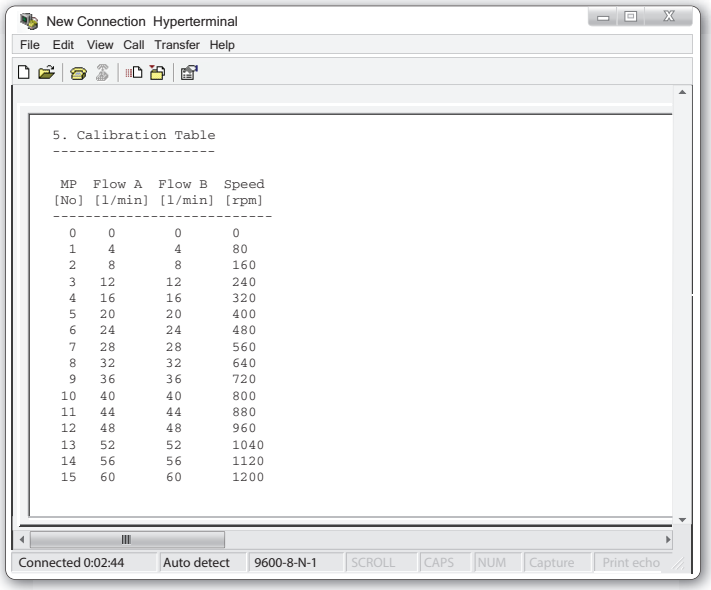

15. A/L – Ratio: Press '**6**'
    Sub item 6 can be used to modify the A/L – Ratio. Set A/L – Ratio according to value which is mentioned on the certificate as K-Factor (110%). NOTE: Set Speed Offset to '**0**'.

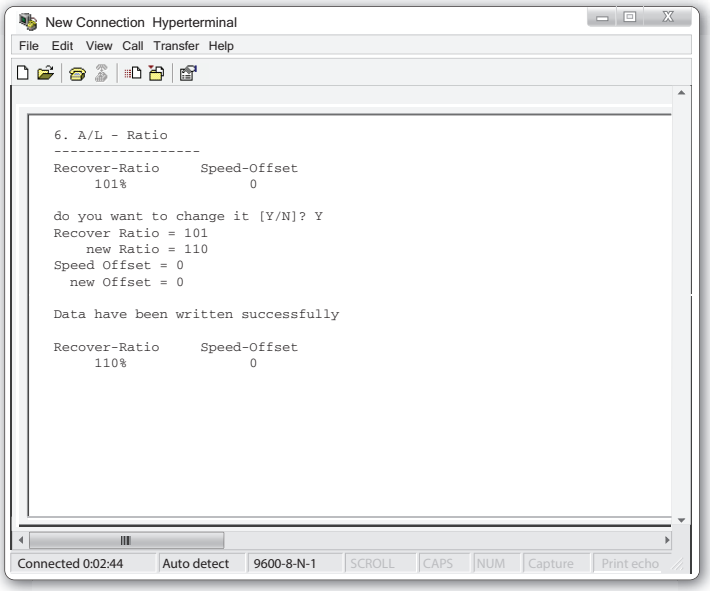

16. Pulse – Ratio: Press '**7**'
    This sub items allows a modification of Pulse Ratio. The pulse ratio defines the fuel flow rate which has to match the dispenser flow rate. Refer to the dispenser manufacturer's manual to input the correct pulse ratio.

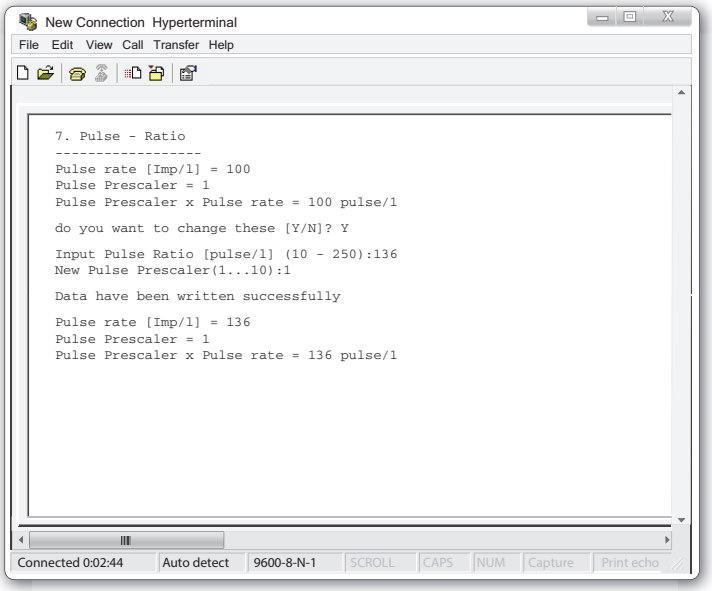

17. Re-regulation factors: Press '**8**'
    Use item 8 to review the re-regulation factors those will be controlled by the intelligent re-regulation of monitoring. The permitted re-regulation range is (85 – 125)%. A factor value of 100 represents 100%.

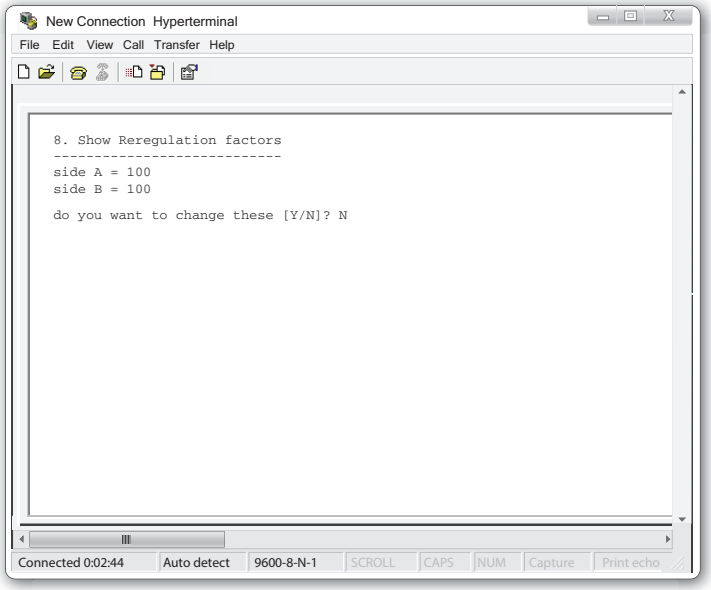

18. Function Test - menu option '**9**'
    DO NOT SELECT - this function test requires special testing equipment and is for factory use only.
19. Show Hot Keys: Press '**h**'
    This item shows all other available hot keys.

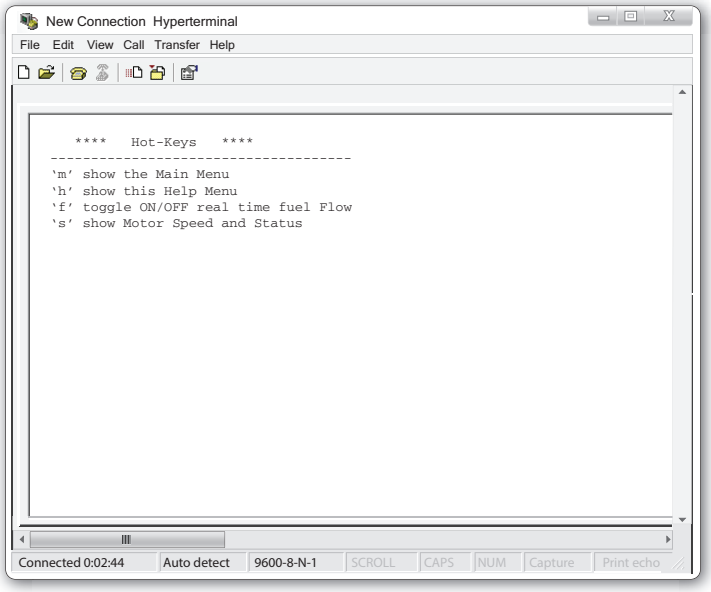

VaporTEK Calibration

NOTICE **Refer to dispenser manufacturer's manual for VaporTEK system commissioning before conducting the A/L calibration procedure.**

Manual Calibration Using The Speed Setup If High Voltage Signals M1 And M2 Are Used

Check the dispenser flow rate during a real transaction on the highest nozzle clip. Setup the speed to M1 or M2 in order to achieve the same vapor flow rate (A/L = 100%) using the sub item "2. Set config".

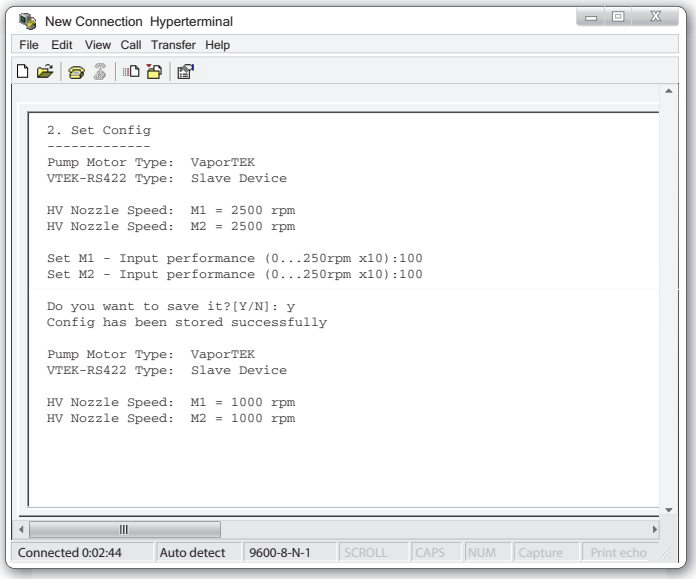

Dry Calibration - A/L Adjustment

A/L adjustment using automatic dry calibration can be performed only with the VaporTEK Plus or VaporTEK Ultra configurations.

Equipment Required

- FB1 hand held terminal with 15-pin to RS422 cable
- Gas meter
- A/L nozzle adapter (varies by nozzle manufacturer)
- Hoses

Initial Setup

1. Verify power is available at the VaporTEK-3 Controller board, both the V1 and V6 red LED's are on and the V3 green LED is flashing slowly.

2. Connect the FB1 Terminal to the RS422 to the service connector if available or connect it directly to X4 connector. Direct connection requires batteries on FB1- Service Terminal.
3. Connect the gas meter encoder cable to the FB1 Terminal.
4. Connect the hoses to the gas meter.
5. Remove the nozzle from the dispenser holder and secure the A/L nozzle adapter to the spout of either the ARVN or Elaflex nozzle as appropriate. The A/L adapter o-rings prevent air leakage into the nozzle's vapor collection holes (see nozzle close up detail in Figure 23. After ensuring the nozzle shutoff port is not covered by the adapter body, tighten the two knurled end rings to secure the adapter to the nozzle.
6. See manufacturer's nozzle manual on method to open the nozzle vapor valve for dry calibration.
7. FB1 Terminal key description:.

START	Power ON the FB1 Terminal
ENTER	Confirm selection
SHIFT	Cancel selection

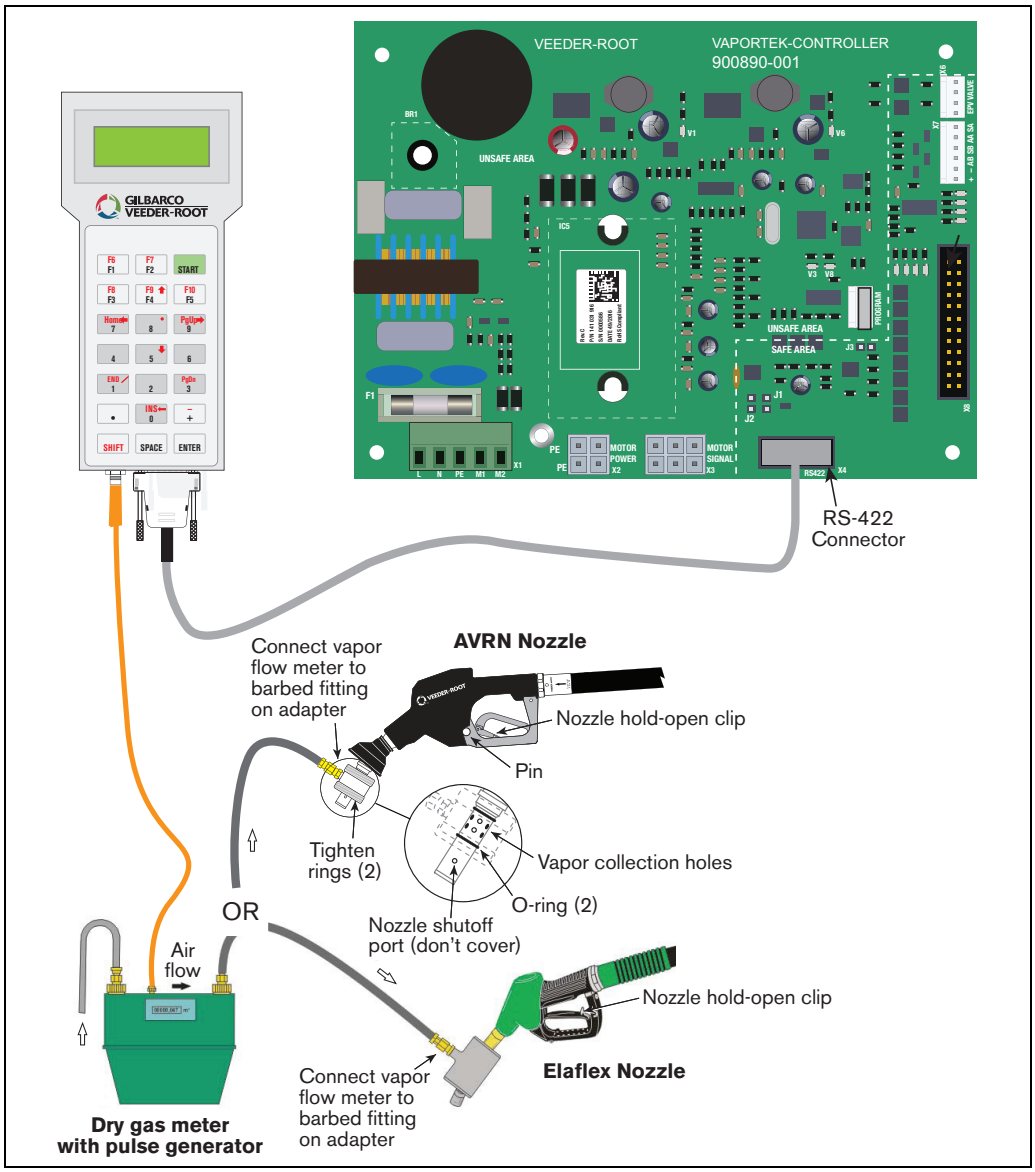

Figure 23. Calibration Setup

Gas Meter Calibration

Gas meter calibration must be completed before conducting simulation.

1. Press the '**Start**' button until below screen appears. Press the keys as shown:

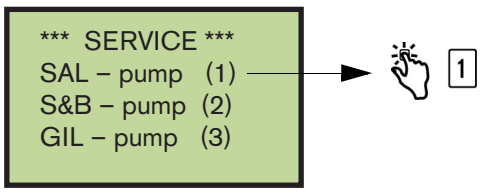

2. When the display below appears, press the keys shown:

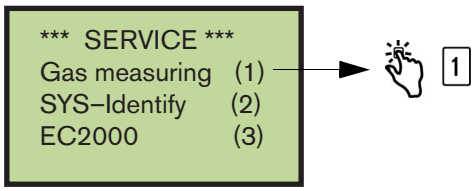

3. When display below appears, press the key shown:

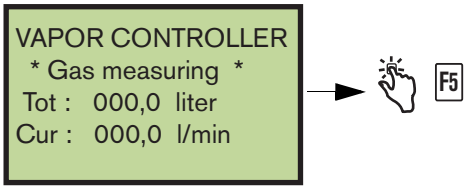

4. Match the calibration factor on the gas meter (see Figure 24) with the following display on the FB1 Terminal. If the calibration factor already matches, press '**ENTER**'. If not, press '**F2**' to change the calibration factor.

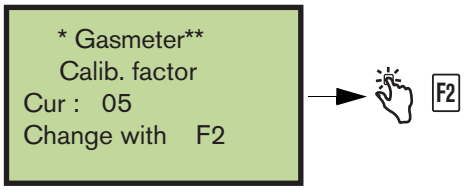

5. When display below appears, input the calibration factor shown on the gas meter (example: 07 is now the New factor) and press '**ENTER**'.

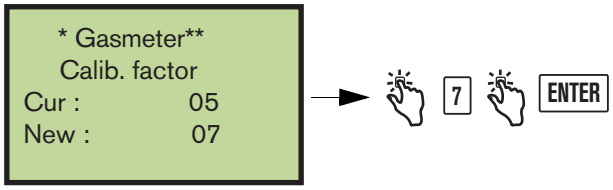

Refer to the Burkert Gas meter product manual for the calibration factor. It is typically marked "K-Factor" (see Figure 24).

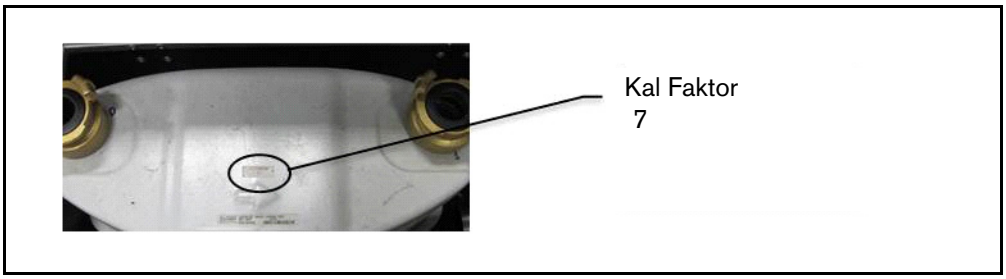

Figure 24. Locate the Burkert Gas Meter Calibration Factor

Pulse Rate Setup With FB1 Terminal

Pulse rate setup on VaporTEK Interface

The VaporTEK Interface receives pulses from an active encoder and calculates the current flow rate by using of the adjusted pulse rate - Range: 50 to 200 Pulses/liter (1 US Gallon = 3.785 liters). For example, the pulse rate for a VaporTEK Interface should be set to 136 pulses/litre for Gilbarco Encore 500S.

If the dispenser is running, the FB1 Terminal will show the current petrol flow rate on the FB1's display by using the FB1 - Sub menu item "Petrol flow (3)" (see step 4 below).

The pulse rate adjustment can be setup either using the service terminal FB1 connected to the VaporTEK Interface, or a Laptop connected to the VaporTEK Interface.

Pulse Rate Setup with FB1

1. Switch on the FB1. Press the **Start** button until below screen displays, then press the keys shown:

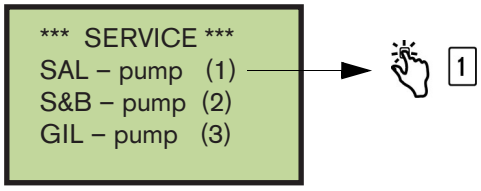

2. When the display below appears, press the keys shown:

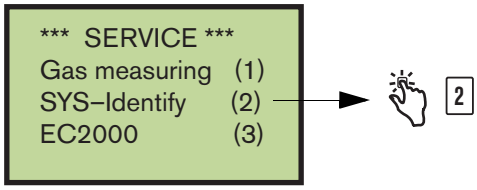

3. When the display below appears, press the keys shown:

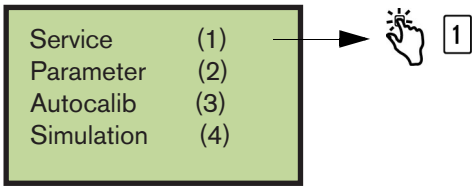

4. When the display below appears, press the keys shown:

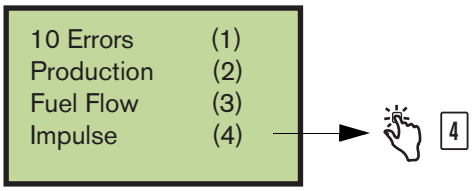

5. When the display below appears, if necessary to change the pulse rate, press the keys shown:

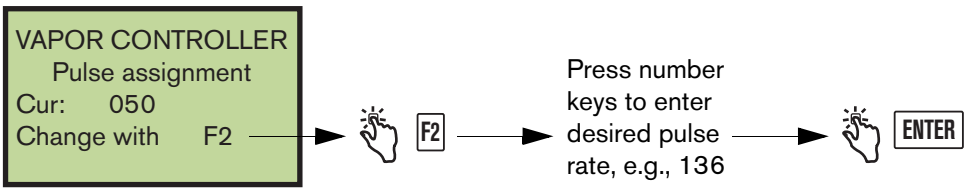

6. Enter Pulse Rate 136 for Encore 500S/500/300 dispensers.

Auto-Calibration using FB1 Terminal

1. Press the **Start** button until below screen appears. Press the keys as shown:

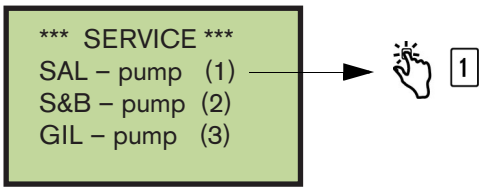

2. When the display below appears, press the keys shown:

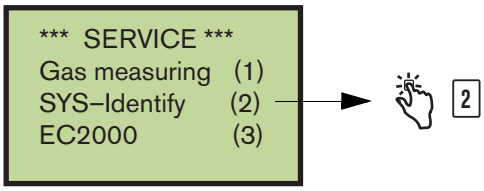

3. When the display below appears, press the keys shown to start the auto-calibration:

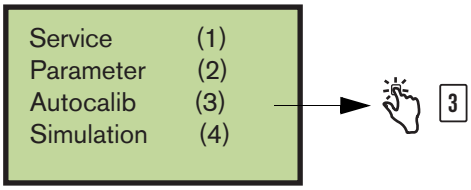

4. At the display below, select the dispenser side (1 or 2) that you want to calibrate:

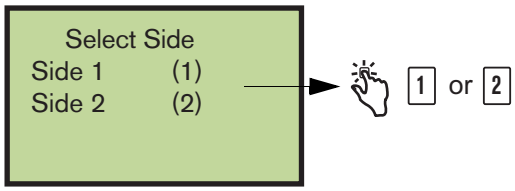

5. Set the A/L Ratio rate:

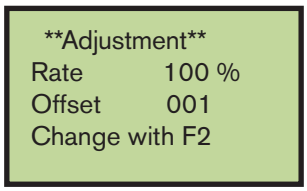

6. Wait while the auto-calibration is calibrating through 15 points:

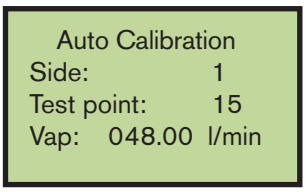

The auto calibration procedure will complete at test point 1.

After the auto-calibration has been accomplished the result of calibration needs to be verified using dry simulation. Follow the steps 1- 6 of the Simulation section and verify the A/L – Ratio which is shown as “Rate”:

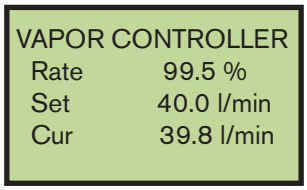

The Rate as displayed on the FB1 Terminal shall be within the legislated range established by local regulation.

Simulation with FB1 Terminal

1. Press the **START** green button on the FB1 Terminal until the below screen appears. Press the keys as shown:

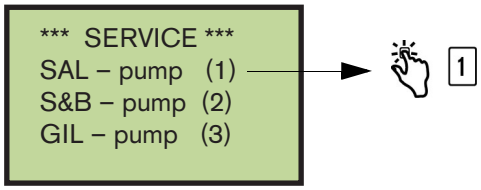

2. When the display below appears, press the keys shown:

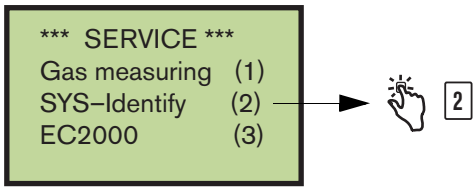

3. When the display below appears, press the keys shown to start the simulation:

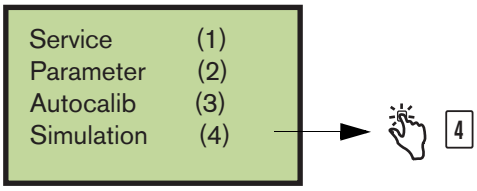

4. At the display below, select the dispenser side (1 or 2) that you want to simulate:

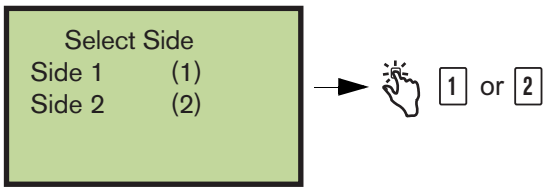

5. At the display below, select the simulation rate of petrol you want to check by pressing the keys shown:

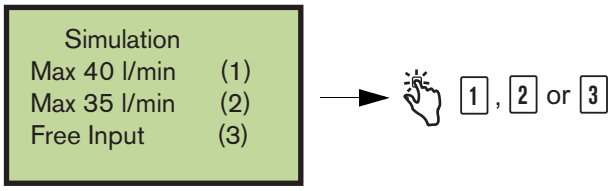

When the flow rate input is provided through the FB1 Terminal the VaporTEK pump will start if greater than 6 liters/minute. The flow rate achieved by the VaporTEK Pump will be displayed in the FB1 Terminal.

6. The FB1 Terminal will start the simulation and display the results as in the example below:

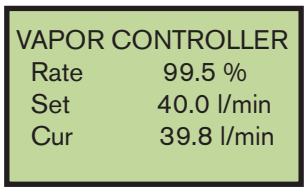

Where:

- Rate is the ratio of current vapor flow (Cur) divided by the simulated petrol flow (Set).
- Set is the simulated petrol flow established in Step 5 above. NOTE: Set value must be greater than 6 lpm to start the VaporTEK Pump.
- Cur is the vapor or air flow measured by the gas meter.

VaporTEK Pump Troubleshooting and Quick Help

Problem	Cause	Corrective Procedure
Pump Fails To Start	Electrical system fuse or circuit breaker tripped	Replace fuse or reset the breaker
	No power to VaporTEK Controller	Verify power circuit breaker is switched on. Restore input power. Verify input voltage rating.
	F1 fuse blown out on the VaporTEK Controller	Replace Controller if F1 fuse blown out.
	Missing an internal board DC Supply Voltage	Check LED V2 (+15V DC) and LED V6 (+5VDC). Both red LED's need to be on.
	No hook signal input	Verify wiring and hook signal input voltage rating.
	No input fuel pulses	Check pulse input wiring on VaporTEK Pulse Interface. Also verify input LED's (Refer Pulse Interface LED section).
	Flow Rate below 6 lpm	Increase fuel flow rate beyond 6 lpm.
	Over Temperature signal is active	Check the motor temperature signal connection.
	Pump Thermal protector Trips	Ambient temperature above rated temperature of the product. Verify proper ventilation for the VaporTEK Pump. Wait a couple of minutes before starting the pump again, Or check the OT - Sensor signal #5 connection.
	Defective VaporTEK Controller or, if equipped, VaporTEK Interface Board	Replace VaporTEK Controller or VaporTEK Interface Board.

Appendix A: VaporTEK System Reference Wiring Diagrams

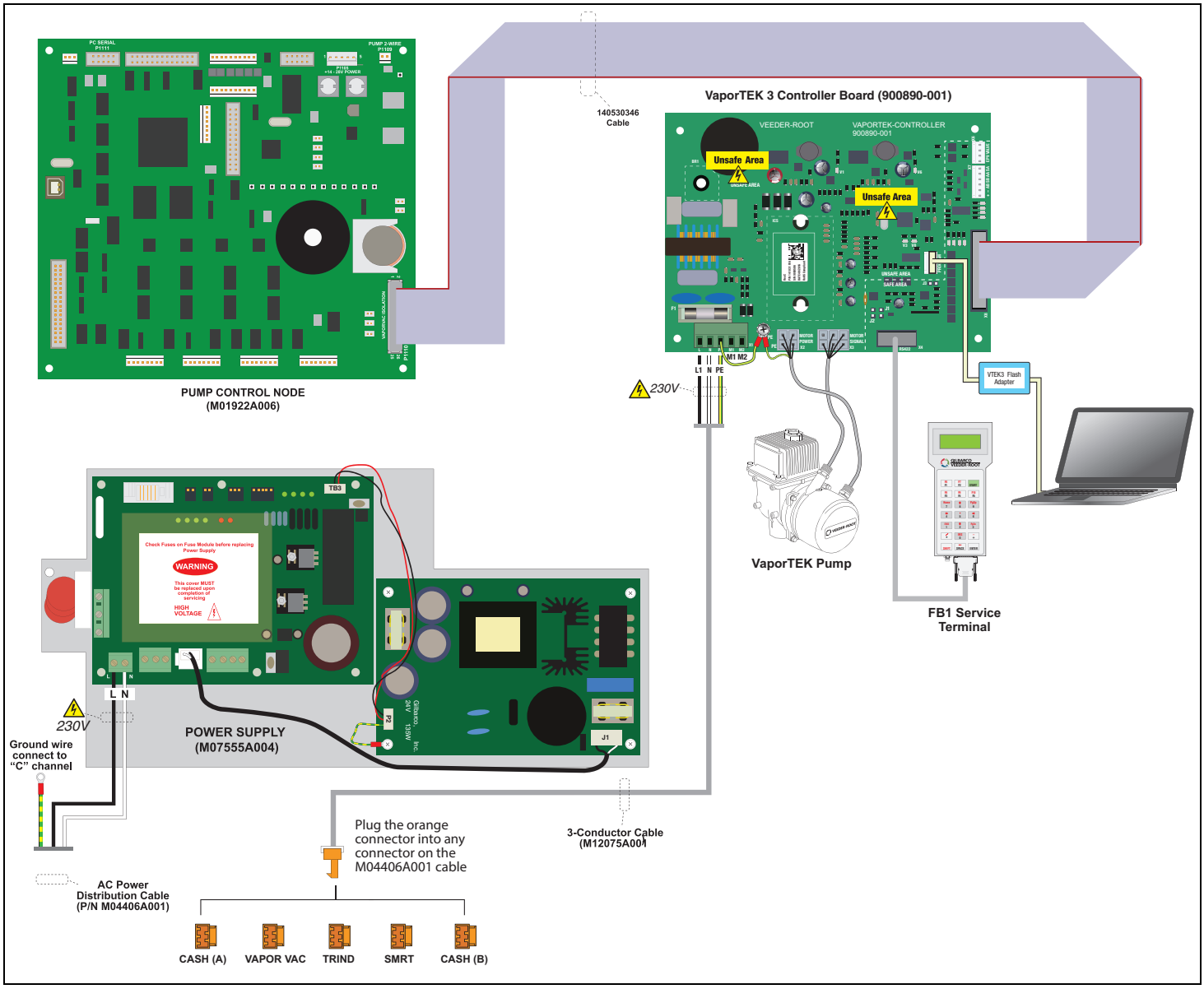

Figure A-1. VaporTEK Plus for Collection - Encore 500S with VaporTEK-3 Controller

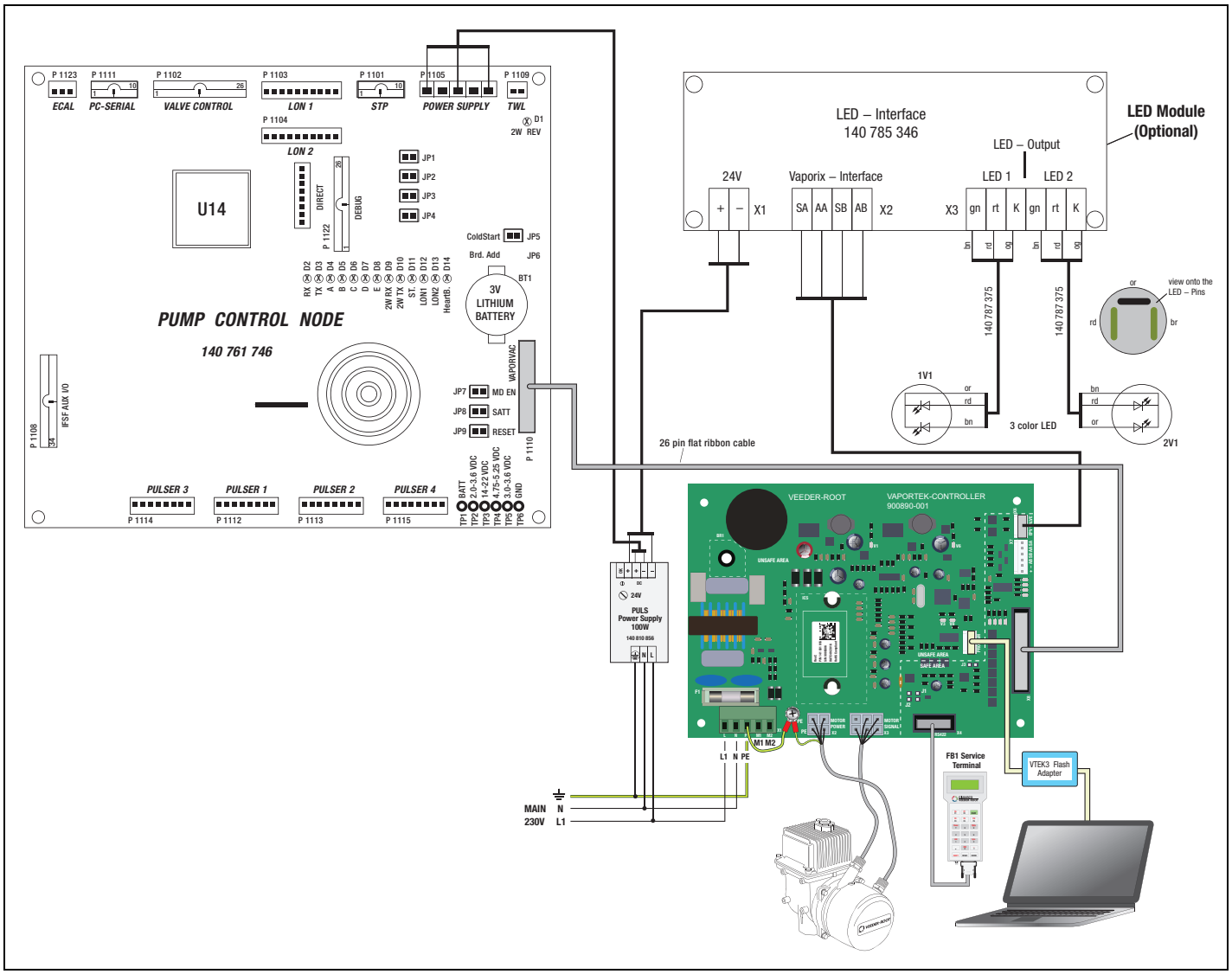

Figure A-2. Vaportek System Plus for Collection Only with 3-Color LED - Encore 500S Dispenser

Appendix B: CCC Certification

本产品经认证符合 CNCA-C23-01: 2019《强制性产品认证实施规则 防爆电气》的要求。

The product(s) is verified and certified according to CNCA-C23-01: 2019 China Compulsory Certification Implementation Rule on Explosion Protected Electrical Product.

#	产品名称 Product 型号 Type	防爆标志 *Ex Marking*	3C 证书编号 CCC Certificate No.
1	油气回收电机 VRM2	Ex db IIA T3 Gb	*CCC:* 202031230100228

依据标准

Series standards GB/T 3836.1-2021, GB/T 3836.2-2021

安全使用条件 Specific conditions of safety use:	-使用环境温度：-20℃~+55℃。 - VRM2 电机的隔爆接合面不允许修理。 - Ambient temperature range: -20℃ to +55℃. - The Type VRM2 motor flamepaths shall not be repaired.

VEEDER-ROOT

For technical support, sales or other assistance, please visit: veeder.com