GILBARCO VEEDER-ROOT

Gilbarco® GPU+

Operation and Service Manual

MDE-5662B

Computer Programs and Documentation

All Gilbarco Inc. and/or Veeder-Root Company computer programs (including software on diskettes and within memory chips) and documentation are copyrighted by, and shall remain the property of, Gilbarco Inc. and/or Veeder-Root Company. Such computer programs and documents may also contain trade secret information. The duplication, disclosure, modification, or unauthorized use of computer programs or documentation is strictly prohibited, unless otherwise licensed by Gilbarco Inc. and/or Veeder-Root Company.

Federal Communications Commission (FCC) Warning

This equipment has been tested and found to comply with the limits for a Class A digital device pursuant to Part 15 of the FCC Rules. These limits are designed to provide reasonable protection against harmful interference when the equipment is operated in a commercial environment. This equipment generates, uses, and can radiate radio frequency energy, and if not installed and used in accordance with the instruction manual, may cause harmful interference to radio communications. Operation of this equipment in a residential area is likely to cause harmful interference in which case the user will be required to correct the interference at his own expense. Changes or modifications not expressly approved by the manufacturer could void the user's authority to operate this equipment.

Approvals

Gilbarco is an ISO 9001:2008 registered company.

Underwriters Laboratories (UL):

UL File#	Products listed with UL
MH1941	All Gilbarco pumps and dispensers that bear the UL listing mark.
MH8467	Transac System 1000 and PAM 1000
E105106	Dell DHM Minitower
E165027	G-SITE and Passport Systems

California Air Resources Board (CARB):

Executive Order #	Product
G-70-52-AM	Balance Vapor Recovery
G-70-150-AE	VaporVac

National Conference of Weights and Measures (NCWM) - Certificate of Conformance (CoC):

Gilbarco pumps and dispensers are evaluated by NCWM under the National Type Evaluation Program (NTEP). NCWM has issued the following CoC:

CoC#	Product	Model #	CoC#	Product	Model #
02-019	Encore	Nxx	02-036	Legacy	Jxxx
02-020	Eclipse	Exx	02-037	G-SITE Printer (Epson)	PA0307
02-025	Meter - C Series	PA024NC10		G-SITE Distribution Box	PA0306
	Meter - C Series	PA024TC10		G-SITE Keyboard	PA0304
02-029	CRIND	—		G-SITE Mini Tower	PA0301
02-030	TS-1000 Console	—		G-SITE Monitor	PA0303
	TS-1000 Controller	PA0241		G-SITE Printer (Citizen)	PA0308
	Distribution Box	PA0242	02-038	C+ Meter	T19976
	Meter - EC Series	PA024EC10	02-039	Passport	PA0324
	VaporVac Kits	CV	02-040	Ecometer	T20453
			05-001	Titan	KXXY Series

Trademarks

Non-registered trademarks

Applause™ Media System	G-SITE® Lite™	SMART CRIND™
CIM™	Highline™	SMART Meter™
C-PAM™	Horizon™	SmartPad™
Ecometer™	MultiLine™	Super-Hi™
ECR™	Optimum™ Series	Surge Management System™
EMC™	PAM™	Tank Monitor™
FlexPay™	PAM™ 1000	TCR™
G-CAT™	PAM™ 5000	Titan™
Gilbert™	Passport™	Ultra-Hi™
G-SITE® Link™	SMART Connect™	ValueLine™

Registered trademarks

CRIND®	Making Things Better®
Dimension® Series	MPD®
e-CRIND®	Performer®
Eclipse®	The Advantage® Series
Encore®	Transac®
G-SITE®	Transac® System 1000
Gilbarco®	Trimline®
InfoScreen®	TRIND®
Legacy®	VaporVac®

Service marks

GOLD℠

Additional US and foreign trademarks pending.

All product names, logos, and brands are the property of their respective owners and are for identification purposes only. Use of these names, logos, and brands does not imply endorsement.

PETROLEUM EQUIPMENT INSTITUTE

Table of Contents

1 – Introduction

Purpose

This manual provides operation and service information on the mechanical and hydraulic components for M09593A102 - Standard Version (75-90 LPM) Gilbarco® Global Pumping Unit (GPU+) model.
Note: M09593A102 is used exclusively on Encore and Atlas self-contained units.

Model Breakdown

The model number appears on the serial number tag attached to the front of the GPU+. The following table shows the features of the models covered in this manual:

Where Used	Model Number	Inlet Check Valve	Air Vent Float	OIML Air Separator
Standard	M09593A102	-	-	-

Revision History

Pump Part Number	New Pump Part Number
M09593A102	-

Determining Model Number

The model number appears on the serial number tag attached to the front of the Gear GPU. Use the table in the "Model Breakdown" to determine the model.

Required Reading

Before servicing or operating the GPU+, the service operator must read, understand, and follow:

- This manual.
- National Fire Protection Association (NFPA) 30A, The Automotive and Marine Service Station Code.
- NFPA 70®, The National Electrical Code (NEC®).
- Applicable federal, state, and local codes and regulations.

Failure to do so may adversely affect the safe use and operation of the equipment.

Note: To ensure valid warranty, servicing must be performed by a Gilbarco-Authorized Service Contractor (ASC).

Related Documents

Document Number	Title	GOLD℠ Library
MDE-4981	Bypass Valve Assembly Kit (M09593K100) Installation Instructions for Gilbarco GPU	• Pump and Dispenser Start-up and Service Manual • Service Manual
MDE-4982	Strainer Kit (M09593K101) Installation Instructions for Gilbarco GPU	• Pump and Dispenser Start-up and Service Manual • Service Manual
MDE-4985	Sump Float Kit (M09593K107) Installation Instructions for Gilbarco GPU	• Pump and Dispenser Start-up and Service Manual • Service Manual
MDE-4988	Control Valve Assembly Kit (M09593K104) Installation Instructions for Gilbarco GPU	• Pump and Dispenser Start-up and Service Manual • Service Manual
MDE-5554	Non-reversing Float (M09593K120) Installation Instructions for Gilbarco GPU	• Pump and Dispenser Start-up and Service Manual • Service Manual
MDE-5626	Gasket Replacement Kit (M09593K205) Installation Instructions for Gilbarco Gear GPU	• Pump and Dispenser Start-up and Service Manual • Service Manual
MDE-5627	Lip Seal Kit (M09593K206) Installation Instructions for Gilbarco Gear GPU	• Pump and Dispenser Start-up and Service Manual • Service Manual
MDE-5628	Inlet Check Valve Kit (M09593K207) Installation Instructions for Gilbarco GPU	• Pump and Dispenser Start-up and Service Manual • Service Manual
MDE-5629	Pumping Element Field Rebuild Kit (M09593K208) Installation Instructions for Gilbarco Gear GPU	• Pump and Dispenser Start-up and Service Manual • Service Manual
MDE-5630	Pumping Element Shop Rebuild Kit (M09593K209) Installation Instructions for Gilbarco Gear GPU	• Pump and Dispenser Start-up and Service Manual • Service Manual
MDE-5631	Control Valve Cover Assembly Kit (M09593K210) Installation Instructions for GPU	• Pump and Dispenser Start-up and Service Manual • Service Manual
MDE-5633	Filter Cover Assembly Kit (M09593K212) Installation Instructions for GPU	• Pump and Dispenser Start-up and Service Manual • Service Manual
MDE-5641	Bypass Valve Cover Assembly Kit (M09593K211) Installation Instructions for GPU	• Pump and Dispenser Start-up and Service Manual • Service Manual

Abbreviations and Acronyms

Term	Description
ASC	Authorized Service Contractor
DEF	Diesel Exhaust Fluid
FCC	Federal Communications Commission
GOLD	Gilbarco Online Documentation
GPU	Global Pumping Unit
NEC	National Electrical Code
NFPA	National Fire Protection Association
OIML	International Organization of Legal Metrology
OSHA	Occupational Safety and Health Administration
PSI	Pounds (of Pressure) per Square Inch

2 – Important Safety Information

Notes: 1) Save this Important Safety Information section in a readily accessible location.

2) Although DEF is non-flammable, diesel is flammable. Therefore, for DEF cabinets that are attached to diesel dispensers, follow all the notes in this section that pertain to flammable fuels.

This section introduces the hazards and safety precautions associated with installing, inspecting, maintaining or servicing this product. Before performing any task on this product, read this safety information and the applicable sections in this manual, where additional hazards and safety precautions for your task will be found. Fire, explosion, electrical shock or pressure release could occur and cause death or serious injury, if these safe service procedures are not followed.

Preliminary Precautions

You are working in a potentially dangerous environment of flammable fuels, vapors, and high voltage or pressures. Only trained or authorized individuals knowledgeable in the related procedures should install, inspect, maintain or service this equipment.

Emergency Total Electrical Shut-Off

The first and most important information you must know is how to stop all fuel flow to the pump/dispenser and island. Locate the switch or circuit breakers that shut off all power to all fueling equipment, dispensing devices, and Submerged Turbine Pumps (STPs).

WARNING

The EMERGENCY STOP, ALL STOP, and PUMP STOP buttons at the cashier's station WILL NOT shut off electrical power to the pump/dispenser. This means that even if you activate these stops, fuel may continue to flow uncontrolled.

You must use the TOTAL ELECTRICAL SHUT-OFF in the case of an emergency and not the console's ALL STOP and PUMP STOP or similar keys.

Total Electrical Shut-Off Before Access

Any procedure that requires access to electrical components or the electronics of the dispenser requires total electrical shut off of that unit. Understand the function and location of this switch or circuit breaker before inspecting, installing, maintaining, or servicing Gilbarco equipment.

Evacuating, Barricading and Shutting Off

Any procedure that requires access to the pump/dispenser or STPs requires the following actions:

- An evacuation of all unauthorized persons and vehicles from the work area
- Use of safety tape, cones or barricades at the affected unit(s)
- A total electrical shut-off of the affected unit(s)

Read the Manual

Read, understand and follow this manual and any other labels or related materials supplied with this equipment. If you do not understand a procedure, call a the Gilbarco Technical Assistance Center (TAC) at 1-800-743-7501. It is imperative to your safety and the safety of others to understand the procedures before beginning work.

Follow the Regulations

Applicable information is available in National Fire Protection Association (NFPA) 30A; *Code for Motor Fuel Dispensing Facilities and Repair Garages*, NFPA 70; *National Electrical Code (NEC)*, Occupational Safety and Health Administration (OSHA) regulations and federal, state, and local codes. All these regulations must be followed. Failure to install, inspect, maintain or service this equipment in accordance with these codes, regulations and standards may lead to legal citations with penalties or affect the safe use and operation of the equipment.

Replacement Parts

Use only genuine Gilbarco replacement parts and retrofit kits on your pump/dispenser. Using parts other than genuine Gilbarco replacement parts could create a safety hazard and violate local regulations.

Safety Symbols and Warning Words

This section provides important information about warning symbols and boxes.

Alert Symbol

This safety alert symbol is used in this manual and on warning labels to alert you to a precaution which must be followed to prevent potential personal safety hazards. Obey safety directives that follow this symbol to avoid possible injury or death.

Signal Words

These signal words used in this manual and on warning labels tell you the seriousness of particular safety hazards. The precautions below must be followed to prevent death, injury or damage to the equipment:

DANGER: Alerts you to a hazard or unsafe practice which will result in death or serious injury.

WARNING: Alerts you to a hazard or unsafe practice that could result in death or serious injury.

CAUTION with Alert symbol: Designates a hazard or unsafe practice which may result in minor injury.

CAUTION without Alert symbol: Designates a hazard or unsafe practice which may result in property or equipment damage.

Working With Fuels and Electrical Energy

Prevent Explosions and Fires

Fuels and their vapors will explode or burn, if ignited. Spilled or leaking fuels cause vapors. Even filling customer tanks will cause potentially dangerous vapors in the vicinity of the dispenser or island.

DEF is non-flammable. Therefore, explosion and fire safety warnings do not apply to DEF fluid lines.

No Open Fire

Open flames from matches, lighters, welding torches or other sources can ignite fuels and their vapors.

No Sparks - No Smoking

Sparks from starting vehicles, starting or using power tools, burning cigarettes, cigars or pipes can also ignite fuels and their vapors. Static electricity, including an electrostatic charge on your body, can cause a spark sufficient to ignite fuel vapors. Every time you get out of a vehicle, touch the metal of your vehicle, to discharge any electrostatic charge before you approach the dispenser island.

Working Alone

It is highly recommended that someone who is capable of rendering first aid be present during servicing. Familiarize yourself with Cardiopulmonary Resuscitation (CPR) methods, if you work with or around high voltages. This information is available from the American Red Cross. Always advise the station personnel about where you will be working, and caution them not to activate power while you are working on the equipment. Use the OSHA Lockout/Tagout procedures. If you are not familiar with this requirement, refer to this information in the service manual and OSHA documentation.

Working With Electricity Safely

Ensure that you use safe and established practices in working with electrical devices. Poorly wired devices may cause a fire, explosion or electrical shock. Ensure that grounding connections are properly made. Take care that sealing devices and compounds are in place. Ensure that you do not pinch wires when replacing covers. Follow OSHA Lockout/Tagout requirements. Station employees and service contractors need to understand and comply with this program completely to ensure safety while the equipment is down.

Hazardous Materials

Some materials present inside electronic enclosures may present a health hazard if not handled correctly. Ensure that you clean hands after handling equipment. Do not place any equipment in the mouth

WARNING

In the event of inclement weather, including snow, ice, or flooding that makes driving conditions dangerous, please avoid servicing units. Always use available door stops to secure upper doors against unwanted/unexpected movement, especially during high winds. If necessary, reschedule service to avoid damage to the equipment. Weather may change unexpectedly; be aware of local weather conditions. During service, if conditions develop making service unsafe, close the unit(s) and proceed to a safe location.

WARNING

The pump/dispenser contains a chemical known to the State of California to cause cancer.

WARNING

The pump/dispenser contains a chemical known to the State of California to cause birth defects or other reproductive harm.

Gilbarco Veeder-Root encourages the recycling of our products. Some products contain electronics, batteries, or other materials that may require special management practices depending on your location. Please refer to your local, state, or country regulations for these requirements.

In an Emergency

Inform Emergency Personnel

Compile the following information and inform emergency personnel:

- Location of accident (for example, address, front/back of building, and so on)
- Nature of accident (for example, possible heart attack, run over by car, burns, and so on)
- Age of victim (for example, baby, teenager, middle-age, elderly)
- Whether or not victim has received first aid (for example, stopped bleeding by pressure, and so on)
- Whether or not a victim has vomited (for example, if swallowed or inhaled something, and so on)

WARNING

Gasoline/DEF ingested may cause unconsciousness and burns to internal organs. Do not induce vomiting. Keep airway open.
Oxygen may be needed at scene. Seek medical advice immediately.

WARNING

DEF generates ammonia gas at higher temperatures. When opening enclosed panels, allow the unit to air out to avoid breathing vapors. If respiratory difficulties develop, move victim away from source of exposure and into fresh air. If symptoms persist, seek medical attention.

WARNING

Gasoline inhaled may cause unconsciousness and burns to lips, mouth and lungs.
Keep airway open.
Seek medical advice immediately.

WARNING

Gasoline/DEF spilled in eyes may cause burns to eye tissue.
Irrigate eyes with water for approximately 15 minutes.Seek medical advice immediately.

WARNING

Gasoline/DEF spilled on skin may cause burns.
Wash area thoroughly with clear water.
Seek medical advice immediately.

WARNING

DEF is mildly corrosive. Avoid contact with eyes, skin, and clothing. Ensure that eyewash stations and safety showers are close to the work location. Seek medical advice/recommended treatment if DEF spills into eyes.

IMPORTANT: Oxygen may be needed at scene if gasoline has been ingested or inhaled. Seek medical advice immediately.

Lockout/Tagout

Lockout/Tagout covers servicing and maintenance of machines and equipment in which the unexpected energization or start-up of the machine(s) or equipment or release of stored energy could cause injury to employees or personnel. Lockout/Tagout applies to all mechanical, hydraulic, chemical, or other energy, but does not cover electrical hazards. Subpart S of 29 CFR Part 1910 - Electrical Hazards, 29 CFR Part 1910.333 contains specific Lockout/Tagout provision for electrical hazards.

Hazards and Actions

WARNING

Spilled fuels, accidents involving pumps/dispensers, or uncontrolled fuel flow create a serious hazard.
Fire or explosion may result, causing serious injury or death.
Follow established emergency procedures.
DEF is non-flammable. However, it can create a slip hazard. Clean up spills promptly.

The following actions are recommended regarding these hazards:

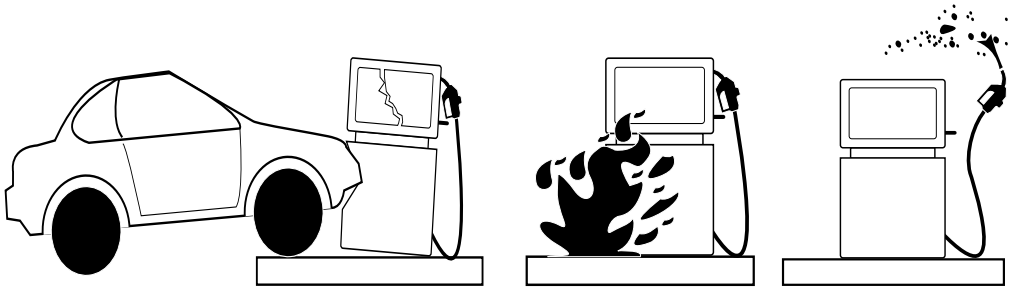

Collision of a Vehicle with Unit | Fire at Island | Fuel Spill

- Do not go near a fuel spill or allow anyone else in the area.
- Use station EMERGENCY CUTOFF immediately. Turn off all system circuit breakers to the island(s).
- Do not use console E-STOP, ALL STOP, and PUMP STOP to shut off power. These keys do not remove AC power and do not always stop product flow.
- Take precautions to avoid igniting fuel. Do not allow starting of vehicles in the area. Do not allow open flames, smoking or power tools in the area.
- Do not expose yourself to hazardous conditions such as fire, spilled fuel or exposed wiring.
- Call emergency numbers.

General Exclusions

Problems caused by faulty installation are not covered by this warranty. This warranty applies only if equipment has been installed, used, and maintained in-accordance with Gilbarco installation, operating, and service instruction.

Use of service personnel other than qualified Gilbarco ASCs without prior approval of Gilbarco product support department will void payment of the warranty claim in question.

Damage suffered by Gilbarco equipment resulting from shipping, accident, power surges, neglect, misuse, act of God, or abuse is not covered by this warranty.

Use of non-Gilbarco replacement parts, defect caused by the unauthorized addition of non-Gilbarco equipment or unauthorized alteration of Gilbarco equipment voids this warranty.

This page is intentionally left blank.

3 – Pumping Unit Operation and Maintenance

Flow of Liquid Through Pumping Unit and Air Eliminator

The following is a high-level overview of how GPU+ M09593 functions:

1. The fuel is drawn from the storage tank through the Strainer Screen or Filter. It could be integral to unit or part of Filter bowl.
2. The rotary gear pumping unit pressurizes the fluid.
3. Fuel enters the Centrifugal Air Separator assembly. Any air that is present is forced out of the air tube along with a small amount of liquid/froth into the atmospheric chamber.
4. When the liquid level in the chamber lifts the Float and Valve assembly, the liquid collected in the atmospheric chamber is returned to the Pump Intake. Air is then vented to the atmosphere through the end tube.
5. Air-free fuel leaving the Air Separator opens the control valve and is pumped into the meter. The control valve includes a built-in Relief Valve which relieves excess pressure caused by hot weather expansion.
6. Fuel passes through the meter where it is accurately measured, then through the hose and nozzle to the vehicle or container being fueled.

7 Whenever the nozzle is not fully opened, some liquid is relieved into the pump through the Bypass Valve.

Figure 3-1: Flow Diagram

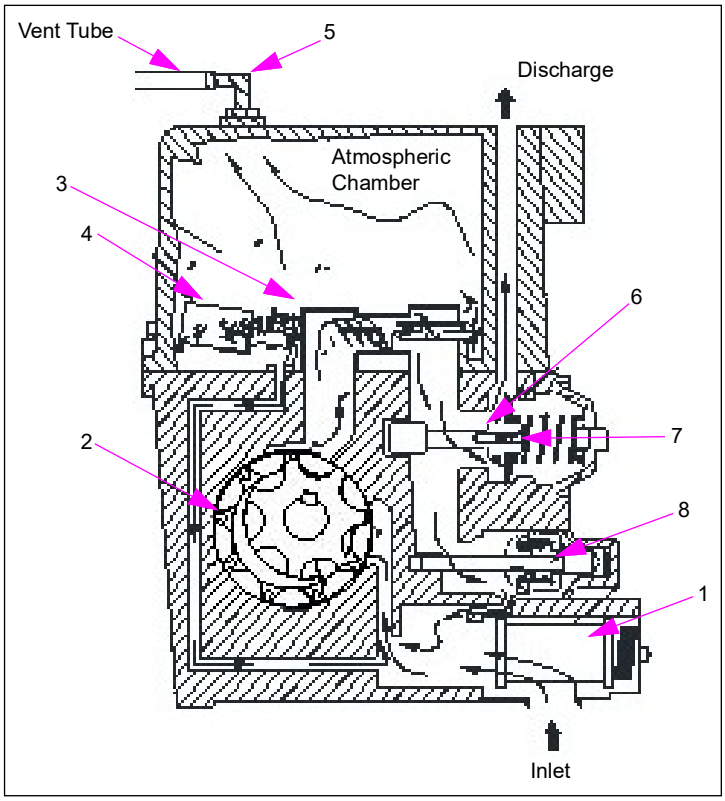

The following table describes the parts in Figure 3-1:

Item #	Part Description
1	Strainer Screen or Filter
2	Rotary Gear Pumping Unit
3	Centrifugal Air Separator Assembly
4	Float and Valve Assembly
5	End Tube
6	Control Valve
7	Built-in Relief Valve
8	Bypass Valve

Float and Air Separator

IMPORTANT INFORMATION
Before gasoline can be accurately measured by the meter, air, and vapor must be eliminated.

The pumping unit eliminates air and vapor by using the Air Separator and Float assembly. The Float assembly employed is as shown in Figure 3-2.

Figure 3-2: Float Assembly

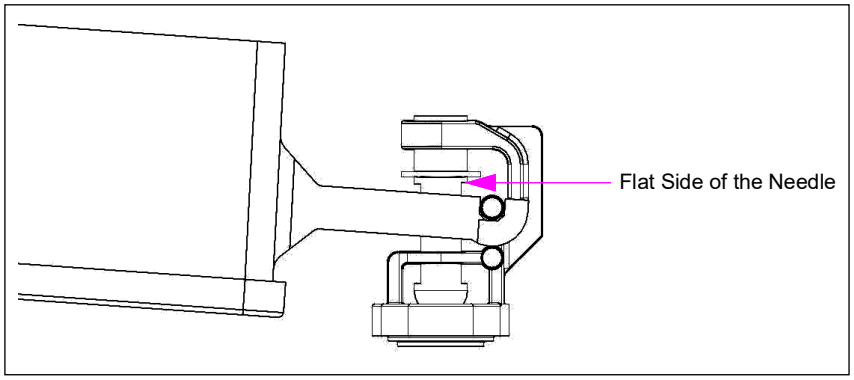

Adjustable Bypass Valve Assembly

The pumping unit uses an adjustable Bypass Valve assembly to limit the pumping unit pressure when the motor is running and no fuel is being dispensed. The adjustable Bypass Assembly includes the following:

- Valve spring
- Guide
- Cover
- Adjustment screw
- Bypass screw cap

Note: The same Bypass Assembly is used on all pumping units (see Figure 3-3).

Figure 3-3: Bypass Valve Assembly

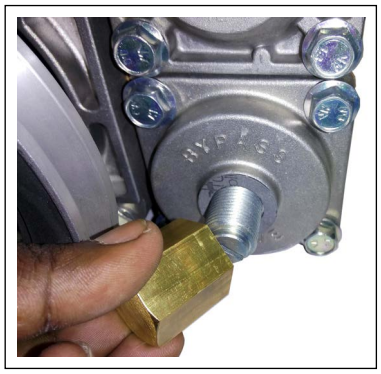

Control Valve

The pumping unit uses a Control Valve that helps to eliminate air by producing a back pressure and is also used as a Check Valve for any fuel above it.

The Control Valve also contains a Pressure Relief Valve. This valve relieves excess hose pressure, which may result from the expansion of fuel in the hose during hot weather, to the air eliminator chamber. This action prevents hoses from bursting and helps prevent pumping unit leaks.

Figure 3-4: Control Valve

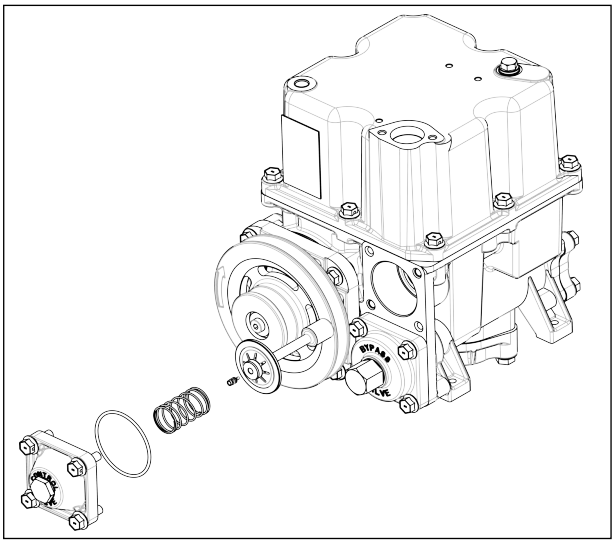

Replacing Lip Seal

To replace the lip seal, proceed as follows:

1. Remove the Belt, Pulley, and Woodruff Key.
2. Remove the circlip with circlip plier and remove the washer. Carefully pry the old seal from the recess in the cover plate and remove the felt ring.
   Note: Do not scratch the shaft.
3. Wipe the Shaft clean.
4. With a small plastic plug tool (furnished with new seal), slip the new seal over the shaft and remove the tool.
5. Reinstall the felt ring, Woodruff key, pulley, and the belt.

Figure 3-5: Replacing Lip Seal

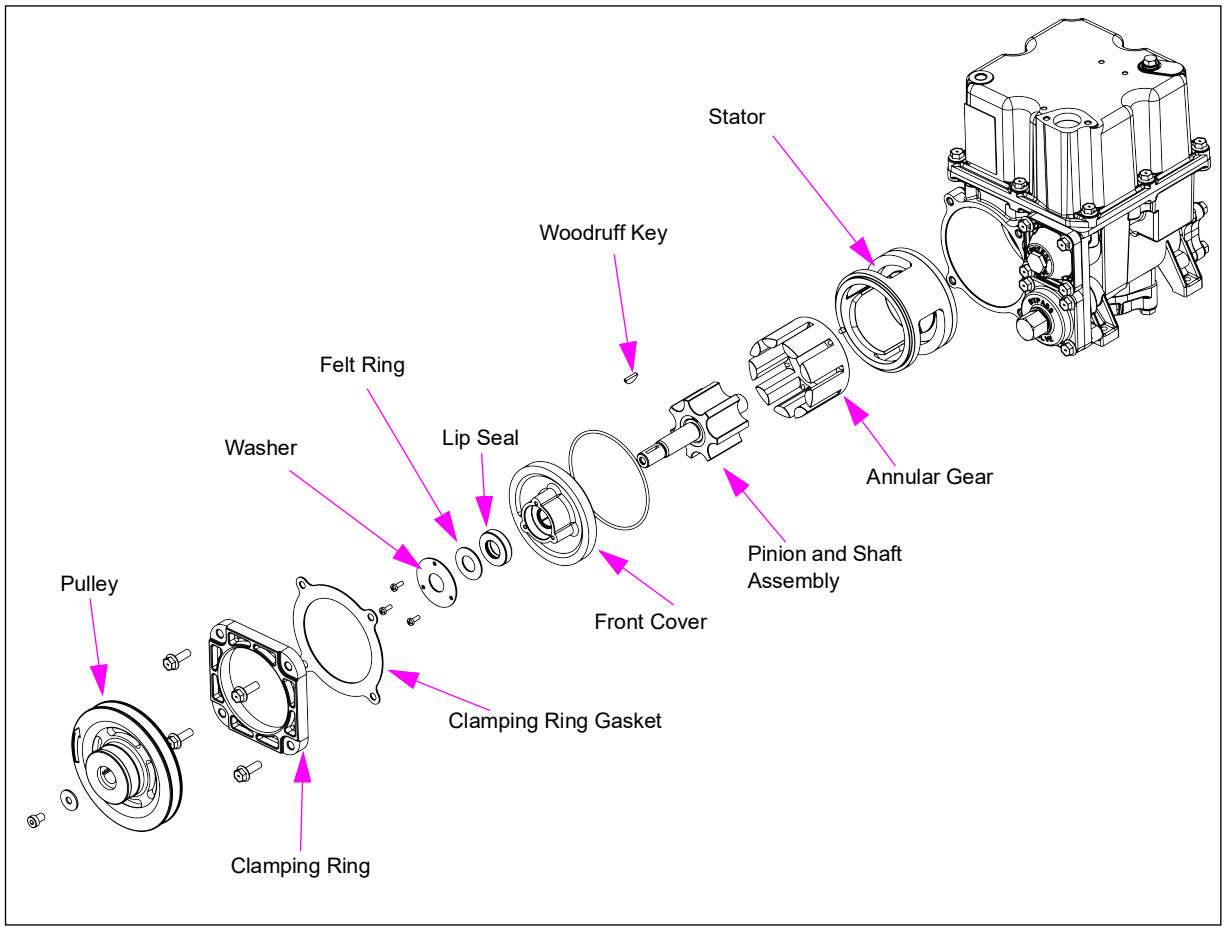

This page is intentionally left blank.

4 – Upgrading GPU+ (For Encore and Atlas)

This section describes the replacement procedure and the parts required for replacing of Vane Gear GPU (M04920B003) assembly with GPU+ on Atlas and Encore® dispensers.

The following kits are needed for upgrading to GPU+ assembly, as indicated for the dispenser:

Kit Number	Kit Description	Standard Belt (previous part)	Standard Pulley (previous part)	Noise/Power Reduction Belt (included in kit)	Noise/Power Reduction Pulley (included in kit)
M19196K001	Kit, Gear GPU Retrofit, Encore 60Hz	R06711-59 (39” belt)	R18900-34	N/A	R18900-30
M19196K002	Kit, Gear GPU Retrofit, Encore 50Hz	R06711-61 (40” belt)	R18900-41	R06711-59 (39” belt)	R18900-34
M19196K003	Kit, Gear GPU Retrofit, Atlas 60Hz	R06711-38 (31” belt)	R18900-34	N/A	R18900-30
M19196K004	Kit, Gear GPU Retrofit, Atlas 50Hz	R06711-39 (32” belt)	R18900-41	R06711-38 (31” belt)	R18900-34

The GPU+ (M09593A102) is a direct replacement for the previous M04920B003 pumping units (vane type), except for the motor pulley to adjust speed for the GPU+ and a pump mounting bracket for use on Encore. The four grades on Encore models also require a different motor conduit (M16125B003).

Notes: 1) Pumping units do not come with Inlet Check valves and are not interchangeable between M04920B003 and M09593A102. Order check valves separately. For units sharing inlets, both pumping units are required to have internal Check Valve (M09593K207 GPU+ Inlet Check kit).
2) Inlet Check valves (other than Internal Check valves) are prone to have excessive spring preload and can be detrimental to unit performance.

Replacing the Gear GPU Assembly

Note: Read and follow all safety related information provided in “Important Safety Information” section on page 2-1.

Removing the Existing Pump Assembly

To remove the existing pump assembly, proceed as follows:

1. Remove the belt and motor pulley.
2. Remove the outlet pipe and retain the bolts for reuse.
   Note: The kit contains the new O-rings.
3. Disconnect and retain the three Bolt Inlet flange from the pump for using it on the replacement pumping unit.

4 Unbolt the pumping unit from frame/bracket of the dispenser and remove the pumping unit.

5 Remove vent fittings from the pumping unit.

6 For Encore dispensers, unmount the idler pulley and bracket.

Preparing Replacement Pumping Unit for Installation

To replace the pumping unit, proceed as follows:

1 Remove the protective caps.
Note: Take safety measures as some residual fluid may pour out.

2 Remove the inlet flange if the previous pump's inlet flange is to be reused.

3 Install the vent fitting removed from the pumping unit in step 5.

Mounting the Replacement Pumping Unit

To mount the replacement pumping unit, proceed as follows:

1 For Encore 4th grade (position Z), the new conduit M16125B003 is required connected at J-box.

2 For Encore dispensers, mount the pumping unit with the new idler bracket supplied.

3 Reconnect the outlet pipe and tighten the bolts to torque of 35 in-lb.
Note: Ensure not to strip threads while tightening.

4 Reconnect inlet and connect the copper vent tubing to pump vent.

5 Reinstall the idler.

6 Mount the new motor pulley (set screw side inwards) using the standard pulley (refer to the table on page 4-1), and set the pulley flush to the end of the shaft.
Note: Verify position after assembly.

7 Mount the belt and align motor pulley to pump pulley.
Note: The motor shaft might be indented to the pulley end.

8 Tighten the belt.
- For Encore - Push idler inwards to tighten the belt as some stretch might occur.
- For Atlas - Loosen the slide plate that holds the motor and push the plate downwards to tighten. On rare occasions, if the plate is fully down but the belt is not tight, remove the belt, loosen the nuts holding the motor on, and allow the motor to drop to the bottom of the slots, then reinstall and tighten the belt.

Starting up the Assembly

To start up the assembly, proceed as follows:

1. Ensure all connections are completed.
2. Reconnect the power to the unit.
3. Initiate transaction to verify there are no leaks.
4. If unit runs but no flow happens:

   a Check for inlet leaks and see if the pump vent blows air.

   b Verify that the inlet is tight.

The GPU+ pump pulls more fuel than previous pumps under difficult conditions. As an effect, the pumping unit can be noisier (more flow/pressure = more noise). If the increased noise level is undesirable, either reduce bypass preload (adjustable thread under cap on front of the pump) or install noise/power reduction parts supplied (refer to the table on page 4-1).

Note: Verify that the belt is tightened; too loose could degrade pump performance over time and too tight could cause motor overload/stalling.

This page is intentionally left blank.

5 – Parts Lists and Kits

Model M09593A102

Figure 5-1: Pumping Unit - Standard

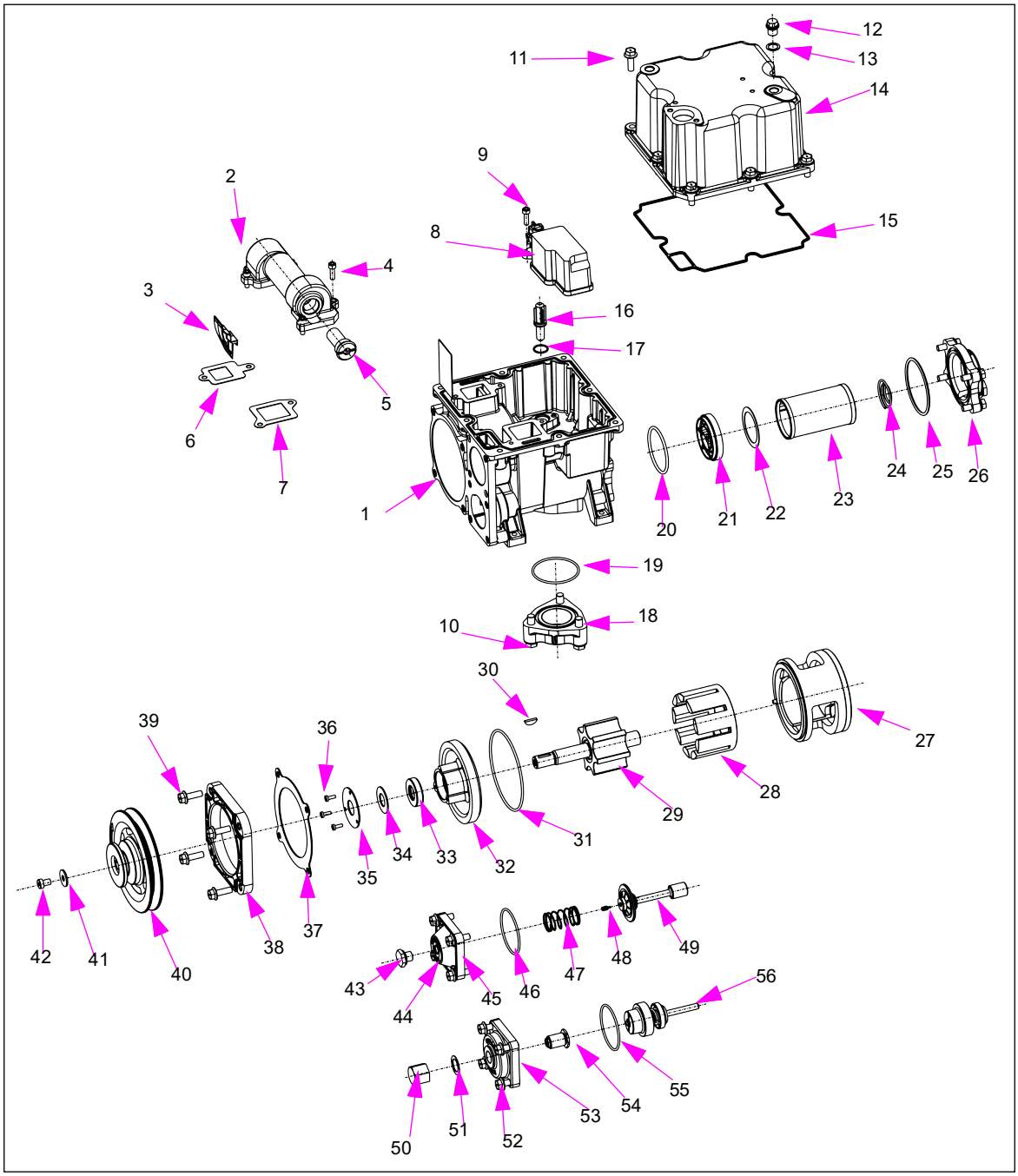

Model M09593A102 - Pumping Unit Parts List

Note: Parts listed in the following table are not available for individual purchase. Repair kits may be purchased. Refer to "Kits for M09593A102" on page 5-3.

Item	Part Description	Quantity
1	Body	1
2	Separator and Air Eliminator	1
3	Insert	1
4	Screw, M6 1 x 20 mm	6
5	Air Separator Tube	1
6	Gasket, Inlet (separator)	1
7	Gasket, Outlet (separator)	1
8	Valve Assembly, Float	1
9	Screw, M6 1 x 20 mm	1
10	Screw, M10	3
11	Screw, M8 1.25 X 25 mm	8
12	Plug, 1/4" NPS	1
13	Washer Plug	1
14	Cover, Atmospheric Chamber / Top Cover	1
15	Top Cover Seal	1
16	Float, Non-reversing	2
17	O-ring, Main Float	1
18	Bottom Inlet Flange	1
19	O-ring, Bottom Flange	1
20	O-ring, Check Valve	1
21	Check Valve Body	1
22	Strainer Gasket	1
23	Strainer Assembly	1
24	Strainer Spring	1
25	O-ring, Check Valve Cover	1
26	Check Valve Cover	1
27	Stator, Cartridge Assembly	1
28	Annular Gear	1
29	Pinion and Shaft Assembly	20
30	Key	6
31	O-ring, Front Cover	1
32	Cover, Front	1
33	Seal, Lip	1
34	Felt Ring	1
35	Plate Seal Retainer	1
36	Screw	3
37	Gasket, Clamping Ring	1
38	Ring, Clamping	1
39	Screw, M8 1.25 X 25 mm	4
40	Pulley, Dual Groove	1
41	Washer	1
42	Low Head Socket Screw	1
43	Plug	1
44	Sealing Screw, M8 1.25 X 25 mm	1
45	Cover, Control Valve	1
46	O-ring	1
47	Spring, Control Valve	1
48	Plug, Valve Relief 200 KPa	1
49	Control Valve Assembly	1
50	Cap, Bypass Screw	1
51	Gasket, Bypass Screw	1
52	Screw, M8 1.25 X 25 mm	4
53	Cover, Bypass Valve	1
54	Screw, Bypass Valve	1
55	O-ring	1
56	Valve, Bypass	1

Notes:
1. Not part of the pumping unit.
2. Current pumping units use a gear assembly.

Kits for M09593A102

The following table lists the kits available for GPU+ assembly. For more information, refer to "Kit Component Parts" on page 5-4.

Kit Number	Kit Description
M09593K100	Bypass Valve
M09593K101	Strainer
M09593K104	Control Valve
M09593K107	Sump Float/Main Float
M09593K207	Inlet Check Valve
M09593K120	Non-reversing Float Replacement Kit
M09593K210	Control Valve Cover
M09593K211	Bypass Valve Cover
M09593K212	Filter Cover
M09593K206	Lip Seal
M09593K208	Pumping Element Field Rebuild
M09593K209	Pumping Element Shop Rebuild
M09593K205	Master Seal

Note: Alternate Fuel Pumps M09593A102 require special kits. For assistance, contact Gilbarco's Engineering Department.

Kit Component Parts

M09593K100 - Bypass Valve Assembly

- Bypass Valve Assembly

M09593K101 - Strainer

- 80 - 90 Micron Strainer
- Strainer Gasket

M09593K104 - Control Valve Assembly

- Control Valve
- Spring

M09593K107 - Sump Float

- Atmospheric Float/Main Float Assembly
- O-ring
- Non-reversing Float

M09593K120 - Non-reversing Float

- Non-reversing Float

M09593K205 - Master Seal

- Rotor Cover Gasket
- O-ring
- O-ring
- Strainer Gasket
- Top Cover Seal
- Air Separator Inlet Gasket
- Air Separator Outlet Gasket
- Bypass Cap Gasket
- Bottom Inlet O-ring
- O-ring
- O-ring Front Cover

M09593K206 - Lip Seal

- Lip Seal
- Lip Seal Insertion Tool
- Felt Ring

M09593K207 - Inlet Check Valve

- O-ring
- Check Valve Assembly

M09593K208 - Pumping Element Field Rebuild

- Pinion and Shaft Assembly
- Lip Seal Insertion Tool
- Pump Lip Seal
- Felt Ring Seal
- Annular Gear
- Woodruff Key
- Internal Circlip

M09593K209 - Pumping Element Shop Rebuild

- Pinion and Shaft Assembly
- Lip Seal Insertion Tool
- Annular Gear
- Woodruff Key
- Front Cover Assembly

M09593K210 - Control Valve Cover

- Control Valve Cover Assembly
- O-ring

M09593K211 - Bypass Valve Cover

- Bypass Valve Cover Assembly
- O-ring

M09593K212 - Filter Cover

- Filter Cover Assembly
- O-ring

6 – Troubleshooting

General Pump Speed, Vacuum, and Pressure Information

The following is the general information regarding pump speed:

- Rated pumping unit speed is 940-970 rpm.
- Pumping unit speed will vary with different input supply frequencies of motors. Ensure that the pumping unit runs at rated speed, as mentioned in the first point, with correct motor pulley and belt combination.

  Note: For assistance, contact Gilbarco's Engineering Department.

The following components are normally associated with pump pressure:

- Control Valve
- Meter
- Computer or Pulser Drive Linkage
- Hose
- Nozzle

The following components are normally associated with pump vacuum:

- Gears
- Rotor/Stator
- Filter
- Bypass Valve and Seat
- Float (opened)
- Installation piping
- Tank Vent Pipe
- Angle Check Valve or Foot Valve
- Tank burial depth

Vacuum readings can vary with each installation. To calculate pump vacuum, proceed as follows:

1. An inch of mercury is required to lift gasoline 1-1/2-feet (0.46-m). Divide the total lift by 1-1/2-feet (0.46-m) to obtain vacuum.

2. Allow an inch of mercury for each angle check, foot valve, or vertical check valve.

3. Allow an inch of mercury for each 60-feet (18.3-m) of piping.

4. Add the readings obtained in steps 1, 2, and 3 to determine the approximate vacuum reading at fast flow.

   Note: Excessive vacuum indicates a restriction. Low vacuum indicates a leak.

Vacuum Gauge Readings (Inches of Mercury)

The following table shows normal vacuum gauge readings for a variety of lift vs. run situations.

Notes: 1) Following table shows normal vacuum gauge readings for general lift vs. run situations. This is intended as a guideline only. Readings will vary depending on other factors, such as pipeline size, number of bends, elevation, fuel composition, and so on.

2) Readings are listed in inches of mercury (in Hg). Some gauges may read in centimeters of mercury (cm Hg), Pounds per Square Inch (PSI) or bar, see "Conversion Factors".

Vertical Lift (Feet)	3	4	5	6	7	8	9	10
Horizontal Run - 0'	3.0	3.6	4.3	4.9	5.5	6.1	6.8	7.4
Horizontal Run - 60'	3.9	4.5	5.2	5.8	6.4	7.0	7.7	8.3

Conversion Factors

- 1 in-hg = 2.54 cm Hg
- 1 in-hg = -0.491 PSI
- 1 in-hg = -0.034 bar
- 1 ft = 0.3048 m

Using Gauge Readings to Troubleshoot Self-contained Pumps

There are a variety of conditions that can contribute to no delivery or slow delivery. A pressure/vacuum gauge is an important tool in determining whether the problem is on the vacuum side or pressure side of the pump.

The vacuum gauge reading can help you determine if there are restrictions of flow in the suction piping system. It will also help you determine the ability of the pumping unit to pump.

Note: Vacuum gauge readings in the following sections are shown in inches of mercury. Pressure gauge readings in the following sections are in PSI.

Testing Pump Vacuum

To test the vacuum of the pump, proceed as follows:

1. Remove the pipe plug in the center of the strainer or filter cover. The cover is marked for easy identification.
2. Install the vacuum gauge.
3. Start the pump and open the nozzle to full flow for a true reading.

4 With the nozzle open, a normal vacuum reading is 6-8-inches of mercury for normal suction (see Figure 6-1).

Figure 6-1: Vacuum Reading - Nozzle Open

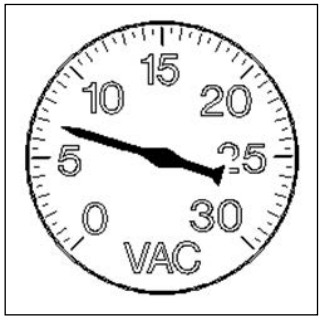

5 With the nozzle closed, a normal vacuum reading is 0 (see Figure 6-2).

Figure 6-2: Vacuum Reading - Nozzle Closed

Testing Pump Pressure

To test the pressure of the pump, proceed as follows:

1 Remove the pipe plug in the center of the control valve cover. Covers are marked for easy identification.

2 Install the pressure gauge.

3 Start the pump and open the nozzle to full flow for a true reading.

4 With the nozzle open, a normal pressure reading is 16-18 PSI pressure.

5 With the nozzle closed, a normal pressure reading is 25-28 PSI pressure (see Figure 6-3).

Figure 6-3: Pressure Reading - Nozzle Closed

Troubleshooting Using Gauge Readings

The following examples help you determine the possible cause of a problem by observing the gauge readings on the inlet (vacuum) and outlet (pressure) side of the pumping unit. Actual readings may vary slightly, depending on installation and environmental conditions.

Figure 6-4: Gauge Troubleshooting - 1

At Control Valve Cover

Symptoms: No Flow; Nozzle Open

Check Inlet Side

Probable Causes:
- Control Valve Stuck Shut
- Bypass Valve Open
- Atmospheric Float Valve Open
- Stuck Rotor Blades
- Broken Suction Line
- Strainer or Filter Completely Plugged or in Backwards
- Empty Tank

At Strainer (or Filter) Cover

Figure 6-5: Gauge Troubleshooting - 2

At Control Valve Cover

Symptoms: No Flow; Nozzle Open

Probable Causes:
- Seized Meter
- Jammed Computer or Geared Box/Pulsar Box
- Completely Restricted Nozzle or Hose

At Strainer (or Filter) Cover

At Control Valve Cover

Symptoms: Slow or No Flow; Pump Laboring; Nozzle Open

Check Inlet Side

Probable Causes:
- Supply Line Restriction
- Stuck Foot Valve (in Tank)
- Angle Check Valve or Vertical Check Valve
- Restricted Tank Vent

At Strainer (or Filter) Cover

At Control Valve Cover

Symptoms: Slow or No Flow; Nozzle Open

Check Outlet Side

Probable Causes:
- Control Valve not Opening Fully
- Pump Vapor Locked

At Strainer (or Filter) Cover

Figure 6-6: Gauge Troubleshooting - 3

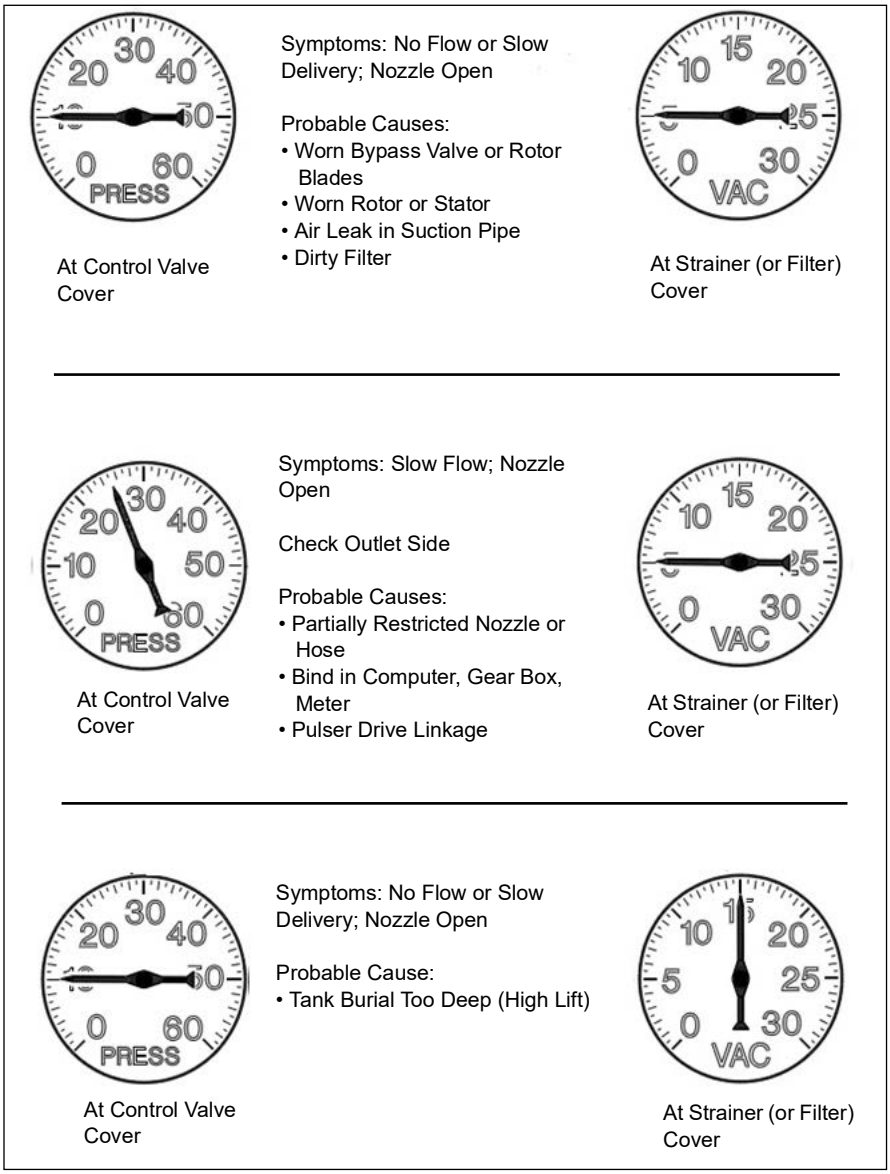

Figure 6-7: Gauge Troubleshooting - 4

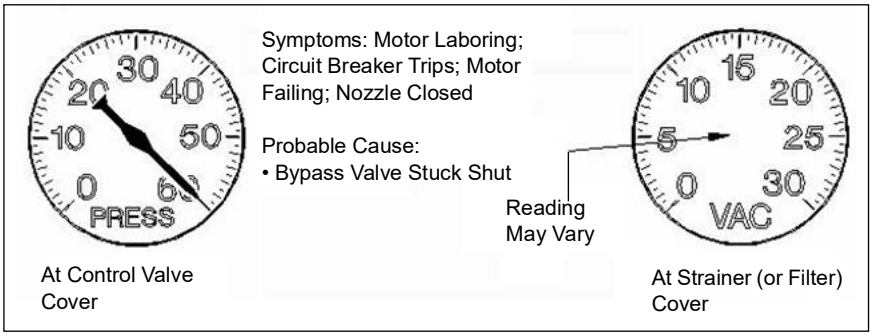

Resolving Issues on Pumping Units

Refer to the following tables for specific troubleshooting information.

Issue: The motor starts but the pump does not deliver fuel

Cause	Action
The fuel supply is below the suction stub in the storage tank.	Fill the storage tank.
The vent pipe is plugged in the storage tank.	Clean the vent pipe.
The strainer screen or filter assembly has an obstruction.	Remove obstructions from the screen or filter assembly.
The bypass valve is not seated properly due to wear or obstruction.	Check the valve for an obstruction causing the valve to stay open, and/or replace the bypass valve.
The v-belt is loose or broken.	Adjust or replace the v-belt.
There is an obstruction in the atmospheric float valve.	Clean the float and valve area. Check for swelling and binding in the linkage.
The pump is out of prime.	Check for a faulty foot valve in the storage tank or a faulty check valve in the suction line.
The suction line is leaking.	Start the pump and open the nozzle. If bursts of air are felt while holding a finger on the vent tube, the suction line is damaged. Repair or replace.
The intake line, foot valve, angle check valve, or vertical check valve have an obstruction.	Connect a vacuum gauge to the 1/4-inch (6.4-mm) plug on the filter cover. Turn the pump on and open the nozzle. A reading of 15 or more inches of mercury with no flow indicates a complete blockage in the suction line. Clean the line or replace.
The suction stub in the storage tank is on the bottom of the tank.	Ensure that there is a 4-inch (10.16-cm) clearance.
The control valve has an obstruction.	Clean the control valve. It must slide freely in the valve cavity.
The nozzle is not working.	Replace the nozzle.
Two pumps are connected to one storage tank with one suction line. There is a faulty check valve in one of the supply lines*.	Disconnect the vent tube on the idle pump. Install a short copper tube. Place the end of the copper tube in a container of liquid. If the liquid is drawn out of the container when the opposite pump is operated with an open nozzle, the line check valve is faulty. Replace the check valve.

**Not recommended.*

Issue: The pump runs, but delivery is slow

Cause	Action
The fuel supply level is low.	Fill the storage tank.
The vent pipe is partially obstructed.	Clean the vent pipe.
The strainer screen or filter assembly has a partial obstruction.	Remove obstructions from the screen or filter assembly.
The bypass valve is not seated properly.	Check the valve for any obstructions which may cause the valve to stay open.
The v-belt is loose.	Adjust the v-belt.
The voltage is too low.	Check the power supply voltage. Check for many pieces of equipment on one electrical line.
An automatic nozzle has been installed.	Delivery speed will be reduced by 10-25%. If the maximum speed is desired, replace with a standard nozzle.
The motor is defective.	Inspect the motor for loose connections. If no loose connections are found, the motor is defective. Repair or replace.

Cause	Action
There is a slow leak in the suction line or intake line.	Start the pump and open the nozzle. If bursts of air are felt while holding a finger on the vent tube, the suction line or intake line is damaged. Repair or replace.
The intake line, foot valve, angle or vertical check valve is partially obstructed.	Connect a vacuum gauge to the 1/4-inch (0.635-cm) plug on the filter cover. Turn the pump on and open the nozzle. A reading of 11 to 13 inches (27.94 to 33.02 cm) of mercury with no flow indicates a partial obstruction in the suction line. Clean or replace the suction line components.
The control valve is partially obstructed.	Check the valve for an obstruction. Replace if necessary.
The nozzle check valve is sticky.	Clean or replace the nozzle check valve.
The hose is defective (flattened).	Replace the hose.

Issue: The motor will not run

Cause	Action
The power is off.	Check the circuit breaker in the station.
The motor is defective.	Disconnect the power supply. Inspect the motor for loose connections. If no loose connections are found, the motor is defective. Repair or replace.

Issue: The dispenser does not deliver an accurate amount of product

Cause	Action
There is an obstruction in the control valve.	Clean the control valve. It must slide freely in the valve cavity.
There is an obstruction in the air eliminator vent tube.	Clean the vent tube.
The meter needs calibration.	Check calibration test equipment for accuracy. Calibrate the meter.

Issue: There is fuel running out of the vent tube opening when the pump is in operation

Cause	Action
There is an obstruction in the atmospheric float valve. The valve is being held closed.	Clean the float and valve area. Ensure that the float opens completely.
The suction chamber in the pump is flooded (above ground tank)*.	Check the storage tank level. If it is higher than the pumping unit (above ground tank)*, the condition will continue. Install Model 52 pressure regulator valve.

**Not recommended.*

Issue: The computer jumps when the pump is turned on

Cause	Action
The control valve is not seated properly.	Check the valve for an obstruction between the O-ring and the seat. Inspect the O-ring for damage. Replace the valve or O-ring, if required.
There is an obstruction in the expansion relief valve.	Check the valve by pulling spring loaded seat or pressing the metallic plunger. Clean any foreign matter from the valve or replace control valve.
The gaskets are leaking.	Replace worn gaskets.
There is a worn nozzle.	Replace the nozzle.
There is a leak in the hose.	Replace the hose.
Temperature extremes cause the liquid to expand or contract.	Problem will be solved when the pump begins to operate.

7 – Vapor Lock Causes

IMPORTANT INFORMATION
Vapor lock is a problem that results from ambient temperatures, vapor pressure of the product, and installation. It is not a characteristic of a pump.

Reasons for Vapor Lock

Atmospheric Pressure

Atmospheric pressure of 14.7 PSI (sea level) presses on the liquid in the tank (see Figure 7-1).

Figure 7-1: Atmospheric Pressure

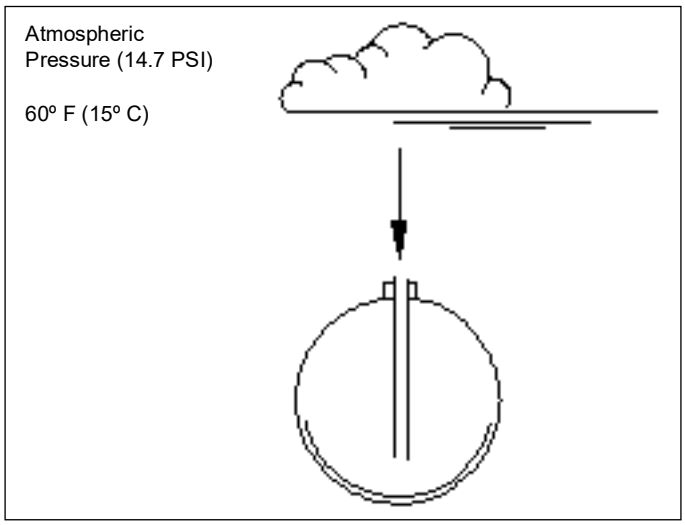

Vapor Pressure

Vapor pressure [the amount of pressure required to keep the product in a liquid form at 60° F (15° C)] of today's product is approximately 10 PSI (see Figure 7-2).

Figure 7-2: Vapor Pressure

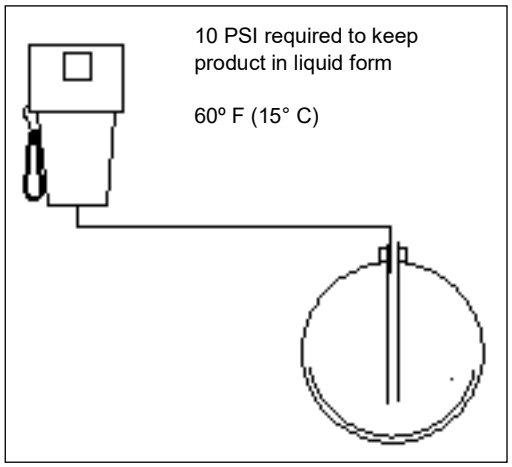

Working Pressure

The difference between atmospheric pressure and vapor pressure is known as the working pressure. The working pressure is all that the pump can create without the product turning to vapor (see Figure 7-3).

14.7 PSI	Atmospheric Pressure
- 10.0 PSI	Vapor Pressure
4.7 PSI	Working Pressure

Figure 7-3: Working Pressure

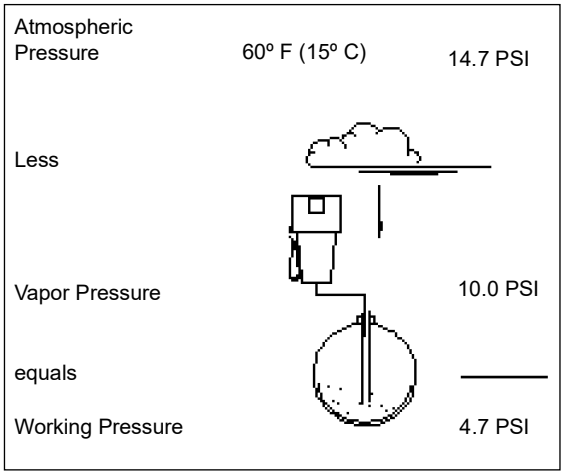

Measuring Suction

To measure a pump's suction, the working pressure must be converted to inches of vacuum. To do this, multiply the working pressure by 2. The result is the number of inches of vacuum that a pump can create before the product changes to a vapor (see Figure 7-4).

Figure 7-4: Converting Working Pressure to Inches of Vacuum

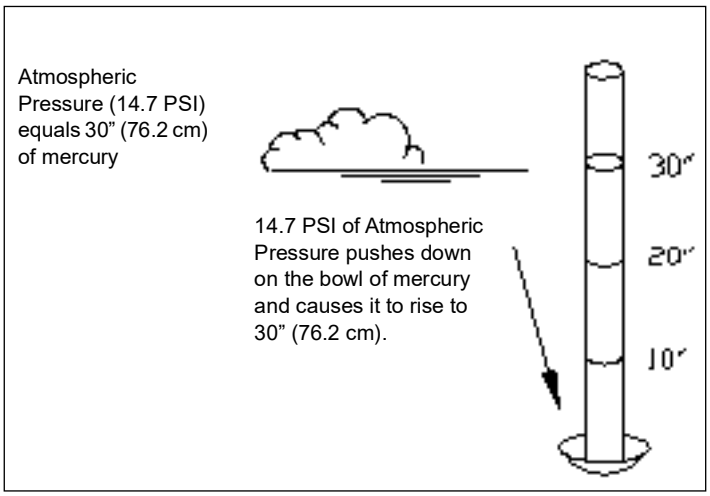

4.7 PSI working pressure = 9.4-inches (23.88-cm) of vacuum (see Figure 7-5).

Figure 7-5: PSI and Vacuum Equivalents

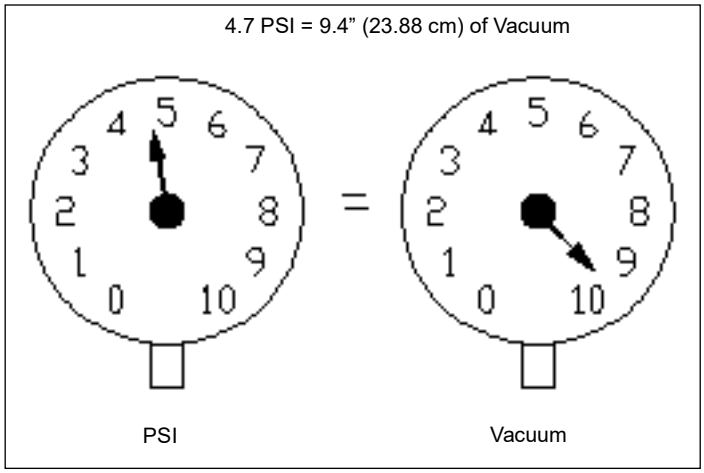

Determining Amount of Vacuum Required for Pump Suction

The condition of installation dictates how much suction a pump must create to pump the product. It takes 1-inch (2.54 cm) of vacuum to lift gas 1.5-feet vertically.

To determine the amount of vacuum required to lift the gas in a system, proceed as follows:

1 Measure the distance from the top of the product in the tank to the center of the pumping unit, as shown in Figure 7-6. Divide the distance by 1.5 to obtain the inches of vacuum required by the pump to lift the product. For example, 9-feet (2.74-m) of lift requires 6-inches (15.24-cm) of vacuum by the pump (see Figure 7-6).

Figure 7-6: Amount of Vacuum Required for Pump Suction

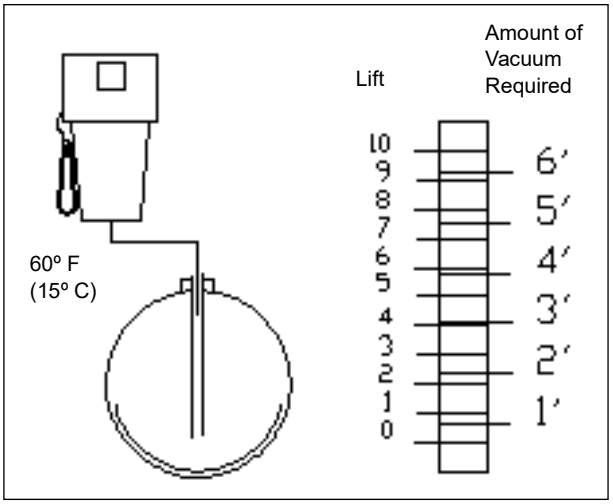

It takes 1-inch (2.54-cm) of vacuum by the pump to overcome the restriction of an angle check valve or foot valve (not part of the pump, but a necessary part of the installation), as shown in Figure 7-7.

Figure 7-7: Compensating for Angle Check or Foot Valve

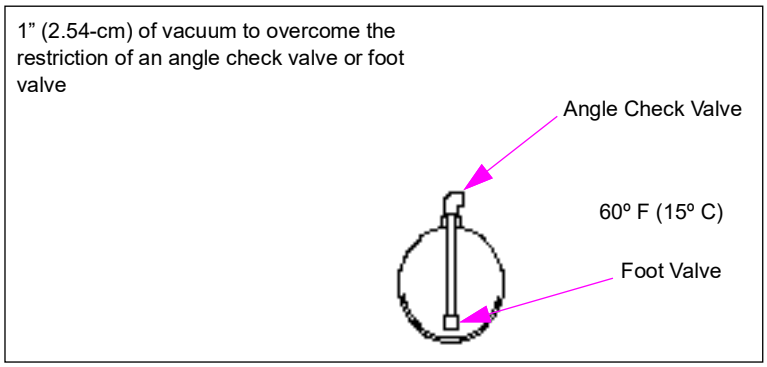

It takes 1-inch (2.54-cm) of vacuum by the pump to overcome the restriction of 60-feet (18.3-m) of horizontal piping from the tank to the pump (see Figure 7-8).

Figure 7-8: Compensating for Horizontal Piping

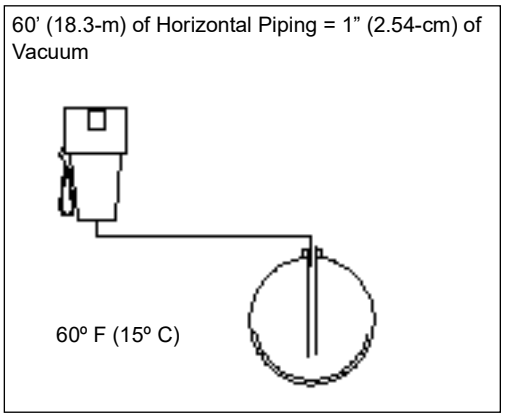

2 To obtain the inches of vacuum required to deliver the product, simply add A, B, and C.

A.	9' of lift	= 6" (15.24-cm) of suction
B.	Angle check or foot valve	= 1" (2.54-cm) of suction
C.	60' horizontal run	= 1" (2.54-cm) of suction
	TOTAL	= 8" (20.3-cm) of suction

With 9.4-inches (23.88-cm) of suction to work with and only 8-inches (20.3-cm) of vacuum required, conditions are normal and the pump delivers the product without vapor locking. *Note: This condition exists when the product is at 60° F (15° C).*

Vapor Lock Conditions

Using the same example as above, 8-inches (20.3-cm) of vacuum is still required to deliver the product.

With higher ambient temperatures, the vapor pressure of the product changes. As mentioned above, the vapor pressure of today's product is 10 PSI at 60° F (15° C). At temperatures of 90° F (32° C) or higher, it can go as high as 12 PSI.

Figure 7-9: Vapor Pressure at 95º F (35º C)

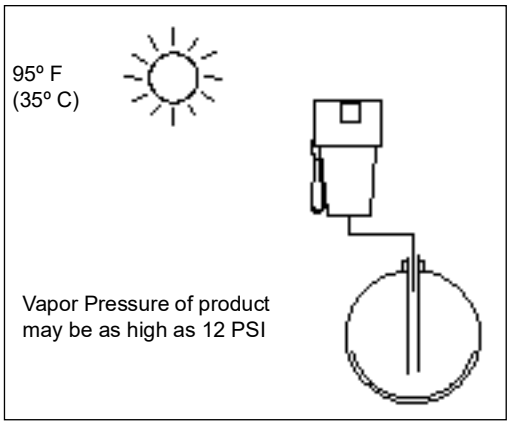

Using the same formula in "Working Pressure" on page 7-2, the working pressure equals atmospheric pressure minus the vapor pressure (see Figure 7-10).

14.7 PSI	Atmospheric Pressure
- 12.0 PSI	Vapor Pressure of the product
2.7 PSI	Working Pressure

Figure 7-10: Working Pressure - Vapor Lock Conditions

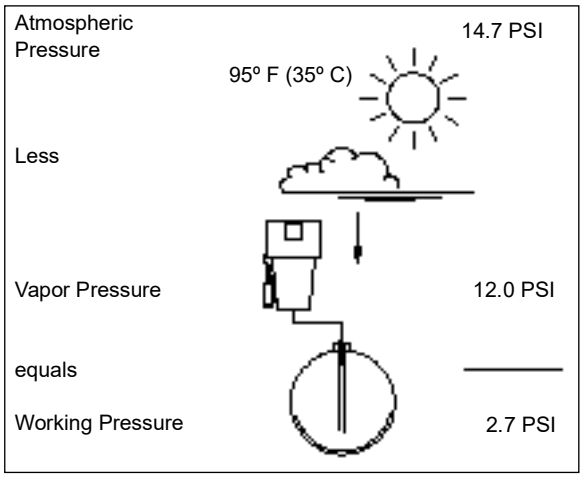

Multiplying the 2.7 working pressure by 2 equals 5.4-inches (13.7-cm) of vacuum that the pump can create before the product turns to vapor (see Figure 7-11).

Figure 7-11: PSI and Vacuum Equivalents - Vapor Lock Conditions

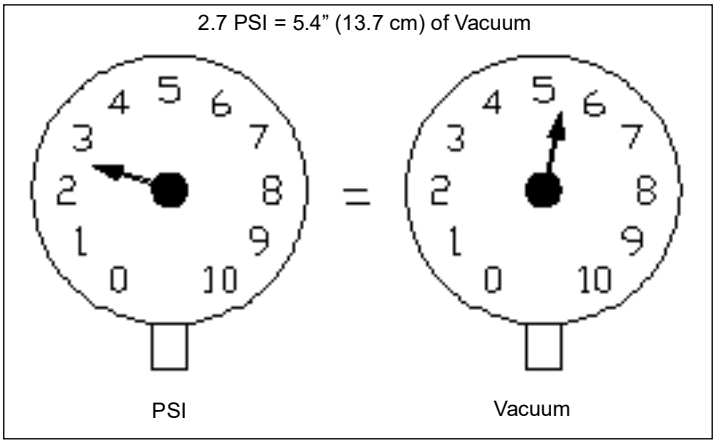

It still takes 8-inches (20.3-cm) of vacuum to deliver the product, but with higher temperatures, there is only 5.4-inches (13.7-cm) of vacuum to lift the product. The result is vapor lock.

Figure 7-12: Vapor Lock Conditions

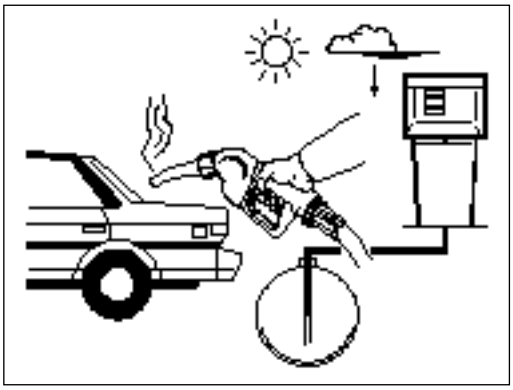

The pump plays a very small part in vapor lock situations. The main reasons for vapor lock are as follows:

- Installation
- Amount of product in the storage tank
- Vapor pressure of the product

Note: Vapor lock does not occur in diesel pumps because the vapor pressure of diesel is approximately 8 PSI.

The only solution for vapor lock in hot climates is to keep the installation and pump cool.

This page is intentionally left blank.

Index

7300 West Friendly Avenue · Post Office Box 22087
Greensboro, North Carolina 27410
Phone (336) 547-5000 · http://www.gilbarco.com · Printed in the U.S.A
MDE-5662B GPU+ Operation and Service Manual · June 2023